Assembly instruction

1. Application

These spare kits are usable for round barrel cylinders of series …/8000 (with cylinder sizes from 32 to 320 mm), for profile barrel cylinders of series .P../182000 (with cylinder sizes from 32 to 125 mm) and for round and profile barrel cylinders of series …./802000 (with cylinder sizes from 32 to 125 mm).

2. Disassembly of cylinder

- Loosen all tie rod nuts or tie rod screws on both sides of the cylinder and remove them as well as – if applicable – tie rods.
- Remove front end cover.
- Remove piston rod assembly from the barrel.
- Separate barrel and rear end cover.

3. Part replacement

- Disassemble all seals and – if applicable – the wear ring using suitable tools and taking care not to damage any sealing surfaces.
- Thoroughly clean all installation spaces for the seals and lightly grease them afterwards.
- Also all new seals have to be lightly greased.
- Fit new seals and wear ring taking care not to damage seals and sealing surfaces. If necessary, a proper assembly tool has to be used.

4. Assembly of cylinder

- Put a thin layer of grease on the inside surface of the barrel and on the piston rod.
- Fill the grease chamber behind the piston rod seal in the front end cover and put a thin layer of grease on the running surface of the piston.
- Fit the barrel to the rear end cover and rotate profile barrel into the desired orientation if applicable.
- Insert piston rod assembly into barrel taking care not to damage any seals.
- Slide front end cover carefully on piston rod in order not to damage the piston rod seal.
- If cylinder has tie rods, screw tie rod nuts onto the short threads of the tie rods and insert them into an end cover. Put remaining tie rod nuts – if applicable – into second end cover. Tighten tie rod nuts crosswise to the specified torque.
- If cylinder has tie rod screws tighten them crosswise on both end covers to the specified torque.
- Check cylinder for leakage (connection front end cover/rear end cover to barrel, piston rod seal)

5. Required grease:

Use only the grease from the grease package enclosed in this spare kit.

Cylinder diameter ø	Cylinder series	Spares kit	Tightening torque for tie rods (Nm)	Tightening torque for tie rod screws (Nm)
32	…/8032, .P../182032, …./802032	.QA/8032/00	7,0 … 9,5	13,6 … 16,0
40	…/8040, .P../182040, …./802040	.QA/8040/00	7,0 … 9,5	13,6 … 16,0
50	…/8050, .P../182050, …./802050	.QA/8050/00	13,6 … 18,4	13,6 … 18,4
63	…/8063, .P../182063, …./802063	.QA/8063/00	13,6 … 18,4	13,6 … 18,4
80	…/8080, .P../182080, …./802080	.QA/8080/00	21 … 28	32 … 40
100	…/8100, .P../182100, …./802100	.QA/8100/00	21 … 28	32 … 40
125	…/8125, .P../182125, …./802125	.QA/8125/00	40 … 54	
160	…/8160	.QA/8160/00	106 … 143	
200	…/8200	.QA/8200/00	106 … 143	
250	…/8250	.QA/8250/00	187 … 253	
320	…/8320	.QA/8320/00	298 … 403	

Figure 1: Disassembly of different cylinder variants

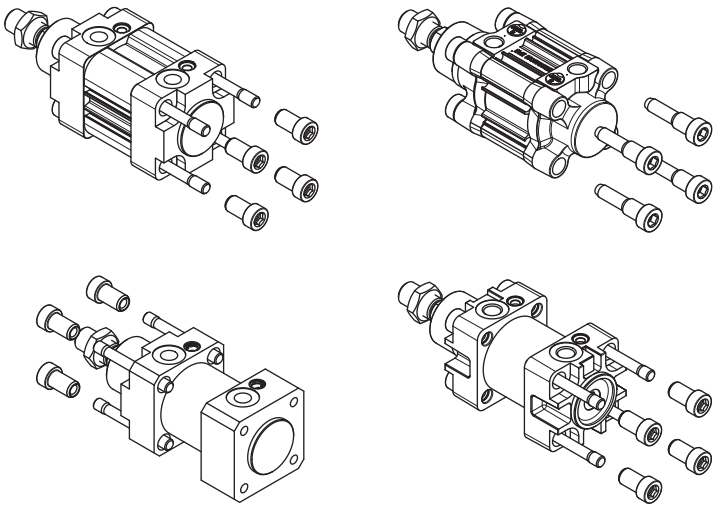

1 Piston rod seal
2 Barrel seal
3 Cushioning seal
4 Piston seal
5 Wear ring

A Check for leakage
B Grease chamber

Figure 2: parts to be changed

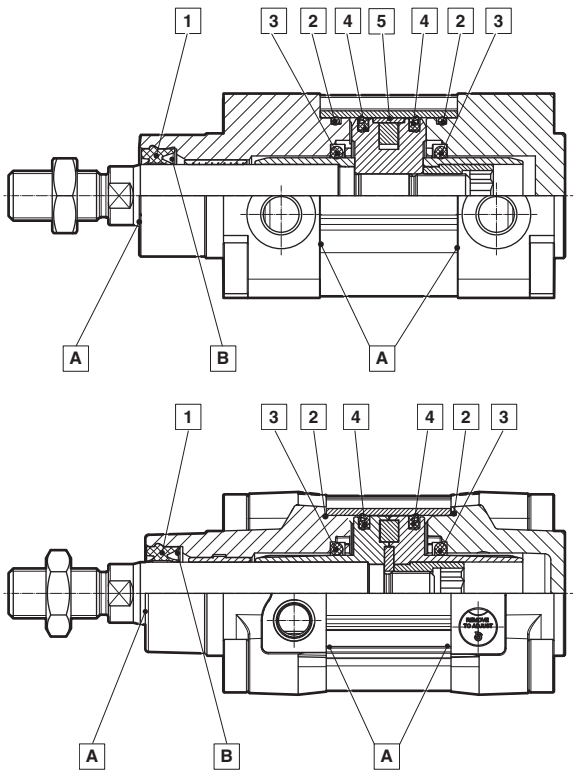

Our policy is one of continued research and development. We therefore reserve the right to amend, without notice, the specifications given in this document. (2000 - IM1213d) © 2015 Norgren GmbH