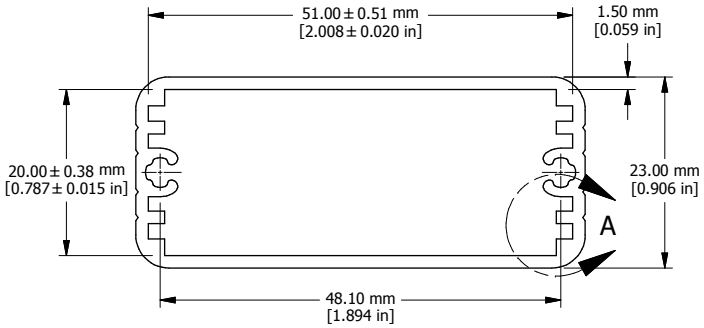

EXTRUSION

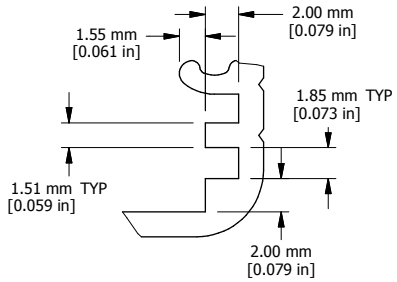

DETAIL A

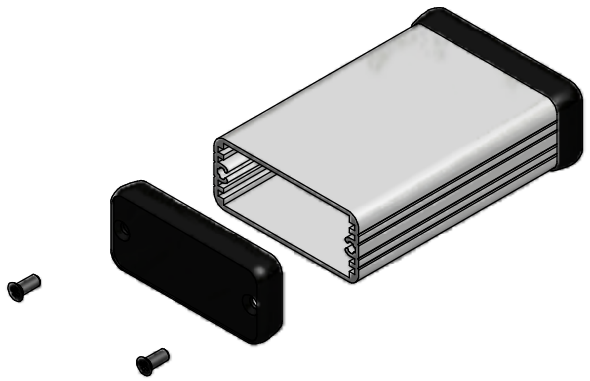

EXPLODED ASSEMBLY VIEW

EXTRUSION DESIGNED FOR 50MM PC BOARD

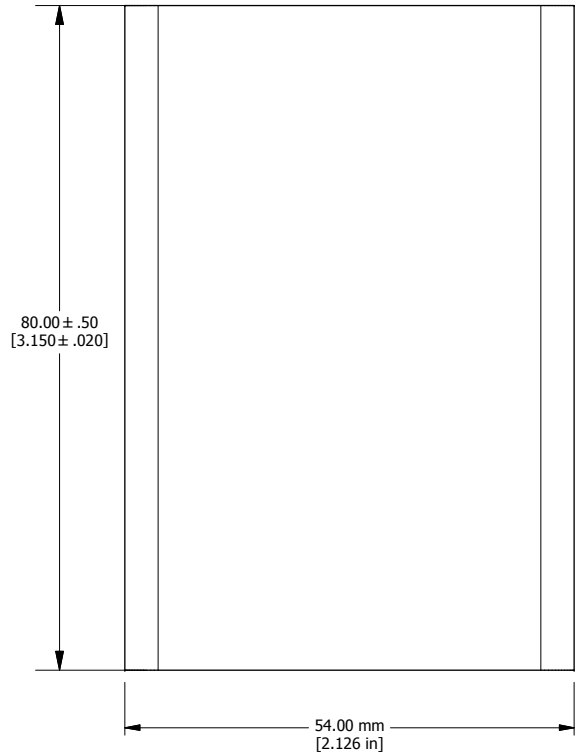

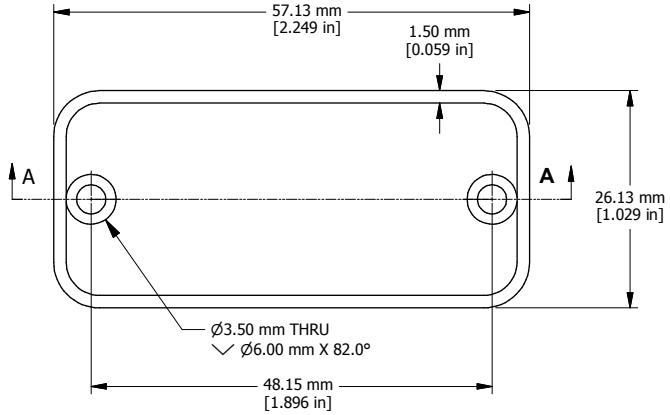

CLOSED BEZEL

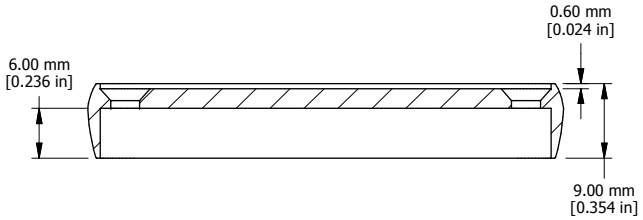

SECTION A-A

Enclosures can be Factory Modified (Milling, Drilling, Printing etc.)
Solid models of this enclosure available in STEP or IGES.
Contact Factory mjm@hammondmfg.com

NOTE
Purchased assembly includes box, plastic bezels, #6 Taptight screws and self adhesive rubber feet.
Box made from Extruded Aluminum 6063.
Bezels made with ABS

1455C802	
PART NUMBERS	
Clear Anodized	1455C802
Black Anodized	1455C802BK
ACCESSORIES	
See website for accessories.	

HAMMOND MANUFACTURING™

1455C802

www.hammondmfg.com