Brand of NTN corporation

Technical data



62204EEC3

Single row deep groove ball bearings

Deep groove ball bearing, radial contact, pressed steel cage, contact seals on both sides

VISUAL (S)

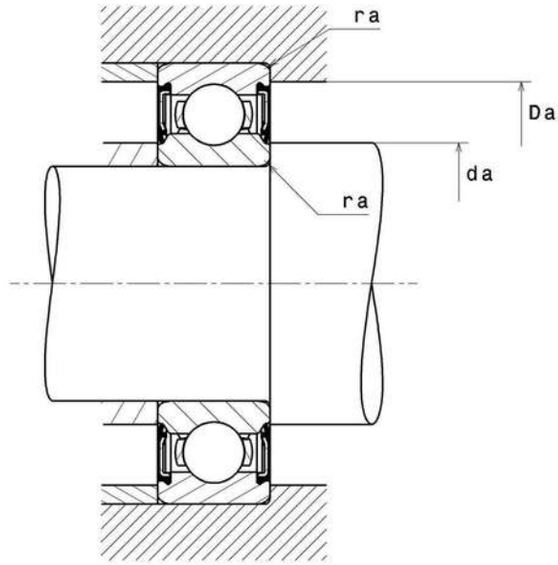

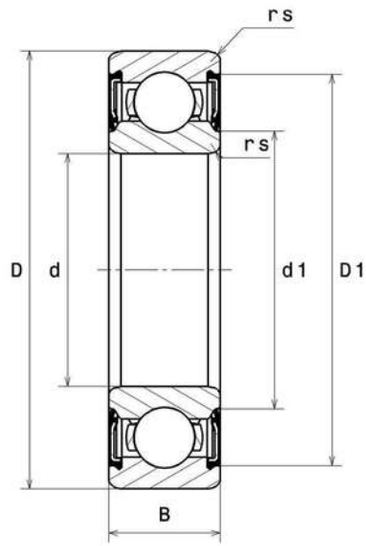

NTN Europe
1 rue des Usines · BP 2017 · 74010 Annecy Cedex · France · Tel. +33 (0)4 50 65 30 00
S.A. au capital de 322 639 919 € · RCS ANNECY B 325 821 072 · Id. Fiscale : FR 48 325 821 072
SIRET 325 821 072 00015 · Code APE 2815 Z · Code NACE 28.15

62204EEC3
Single row deep groove ball bearings

PRODUCT DEFINITION	
Brand	SNR
d - Internal diameter	20 mm
D - External diameter	47 mm
B - Bearing/Inner ring width	18 mm
d1 - External diameter inner ring	25,9 mm
D1 - Inner diameter outer ring	41,4 mm
rs - Min fillet radius	1 mm
Radial clearance class	C3
Mass	0,12 kg

PRODUCT PERFORMANCE	
C - Dynamic load	13500000 mN
C0 - Static load	6600000 mN
Cu - Fatigue limit load	300000 mN
f0 - Coefficient	13.1
N lim - Mechanical Limit Speed	66000 °/s
Tmin - Min operating temperature	243,15 °K
Tmax - Max operating temperature	393,15 °K

BEARING FREQUENCIES	
BPFO - Over rolling frequency on outer ring (60 rpm)	3.052 Hz
BPFI - Over rolling frequency on inner (60 rpm)	4.948 Hz
BSF - Over rolling frequency on rolling element (60 rpm)	3.983 Hz
BRF - Rotational frequency – rolling element (60 rpm)	1.992 Hz
FTF - Rotational frequency - cage (60 rpm)	0.382 Hz

62204EEC3
Single row deep groove ball bearings

ABUTMENT	
da min - Min shoulder diameter IR	25 mm
da max - Max shoulder diameter IR	25,9 mm
Da max - Max shoulder diameter OR	42 mm
ra max - Max shaft & housing fillet radius	1 mm

INDUSTRY CALCUL FACTORS

Equivalent dynamic radial load

P = X.Fr + Y.Fa

$\frac{f_0 F_a}{C_0}$	e	Fa / Fr ≤ e		Fa / Fr > e	
		X	Y	X	Y
0.172	0.19	1	0	0.56	2.3
0.345	0.22				1.99
0.689	0.26				1.71
1.03	0.28				1.55
1.38	0.3				1.45
2.07	0.34				1.31
3.45	0.38				1.15
5.17	0.42				1.04
6.89	0.44				1

Equivalent static radial load

Po = Xo.Fr + Yo.Fa

X_0	Y_0
0.6	0.5

For single or DT bearing arrangement :

If Po <Fr, then use Po = Fr