U.32T - Lockable 2-leg sliding-leg pullers



Description:

● Versatile: conversion possible in inside or outside grip with the same meg.
● Safety: knurled locking button.

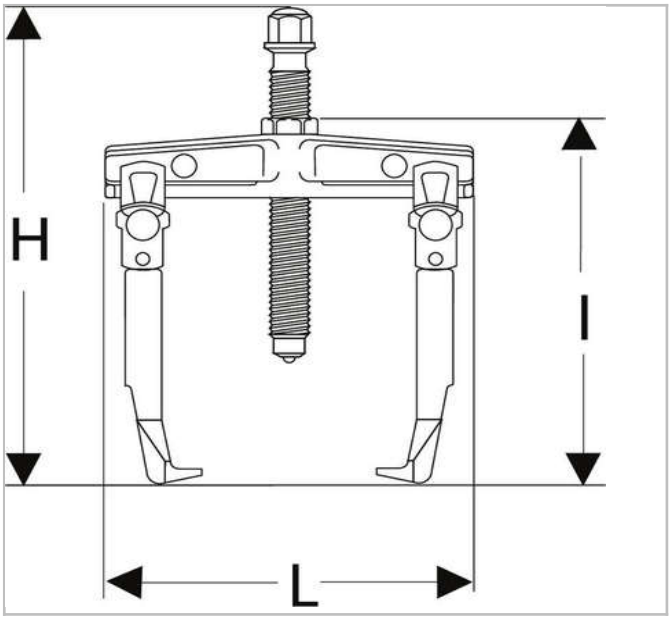

© FACOM 2020

	WIDTH I [mm]	Depth Maxi [mm]	Length L [mm]	Height H [mm]	Hex Size [mm]	Screw Size ["]	Screw Size Multi ["]	Tonnes []	t []	Weight [Kg]
U.32T15-25	305.0	170.0	364.0	360.0	35.0	U.32T15-1	35.0	15.0	150.0	8.6
U.32T15-35	405.0	270.0	464.0	470.0	35.0	U.32T15-2	35.0	15.0	150.0	10.8
U.32T15-50	405.0	270.0	614.0	470.0	35.0	U.32T15-2	35.0	15.0	150.0	17.1
U.32T2-12	150.0	105.0	182.0	170.0	13.0	U.32T2-1	13.0	2.0	20.0	1.2
U.32T2-8	150.0	105.0	142.0	170.0	13.0	U.32T2-1	13.0	2.0	20.0	1.1
U.32T6-16	215.0	150.0	230.0	255.0	24.0	U.32T6-1	24.0	6.0	60.0	2.9
U.32T6-20	215.0	150.0	277.0	255.0	24.0	U.32T6-1	24.0	6.0	60.0	3.2

© FACOM 2020