ITW Switches
SENSORS, SWITCHES, ELECTRONIC CONTROLS

SERIES 49-59 - SEALED PUSHBUTTON

The Series 49-59 is a range of momentary action pushbutton switches which fit a ø16mm panel cut out. The range consists of a fully sealed IP67 version with insulated flying leads (500mm length) along with a panel sealed IP67 version which is terminated by a Series 16 microswitch.

Held in position by a snap fit retaining mechanism, the microswitch has a maximum current rating of 10A and the advantage of SPDT-DB contacts to cover all circuit requirements. Being double break, the contacts also provide reliable switching of DC loads.

The Series is available with a choice of round, round with status illumination (flying leads only) or square bezels and with 6 button colour variants. The body and button are made from PBT, a hard wearing thermoplastic polyester that is suitable for surface or sublimation printing or engraving.

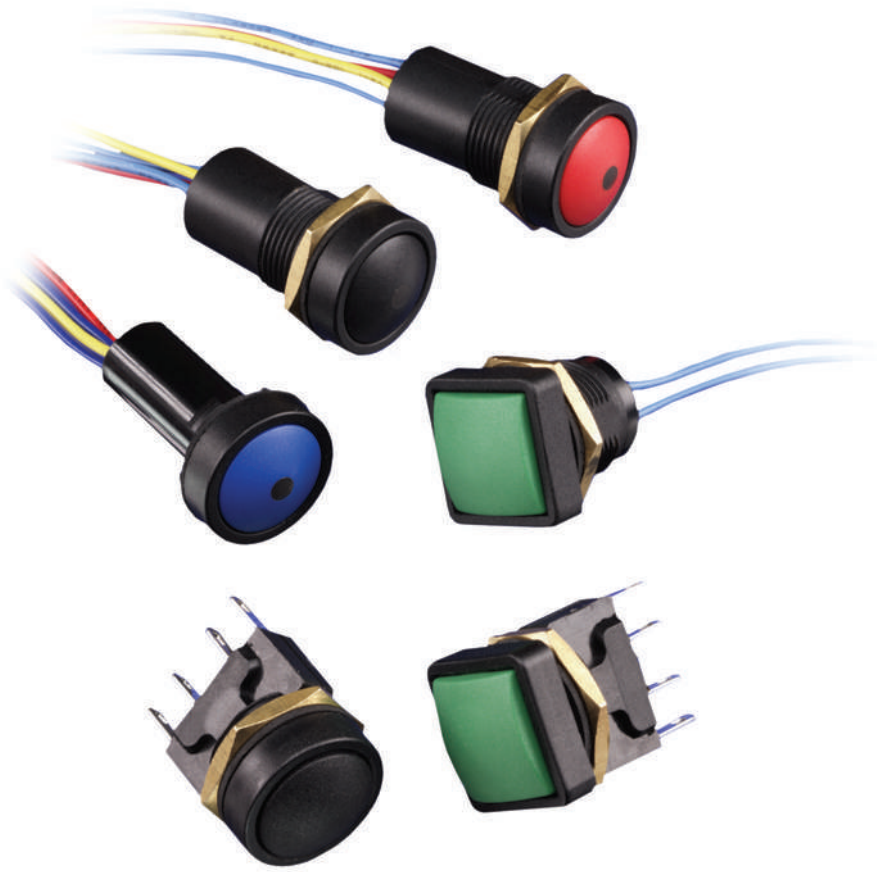

APPLICATIONS:

- Communications
- Instrumentation
- Data processing
- Military environments
- Environmentally demanding keypads
- Mass transport controls
- Dry circuit switching

KEY FEATURES:

- Panel sealed version to IP67
- LED status illumination (FL)
- 10A version panel sealed to IP67
- Wide temperature range
- Industrial standard ø16mm panel cut out
- Flame retardant UL rated materials (not flying leads)

NON-STANDARD OPTIONS:

- Custom colours
- Choice of terminations
- Gold contacts on microswitch version
- Snap-in version of both flying lead and microswitch variants

MOUNTING INFORMATION:

The Series 49-59 fits neatly into a ø16mm cut out panel no more than 8mm thick for the flying lead version and no more than 1.5mm thick for the microswitch version (with sealing washer).

The switch body is fitted from the front of the panel and is locked down with an M16 nut using a 20mm spanner. Panel sealing is achieved by the use of a sealing washer which is placed behind the head of the bezel. To attain the correct sealing, the nut should be tightened to a recommended torque of between 1Nm and 1,5Nm not exceeding 2Nm. Whilst the flying lead version is now mounted, the microswitch still requires careful 'snapping' into its holder from behind the panel. Each flying lead switch is supplied with 500mm 24AWG 7/32 leads which are PVC insulated and have plain unstripped ends.

The microswitch version has 2.8mm QC terminals which also provide the option to solder. Double 'D' flats are provided to prevent rotation of the switch in the panel.

PRODUCT DRAWINGS

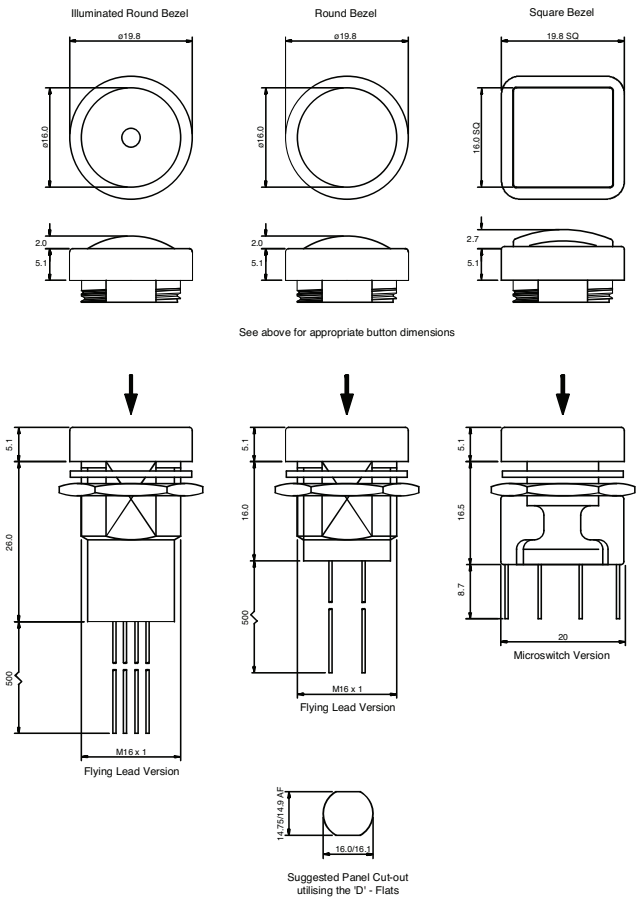

CIRCUIT FOR FLYING LEAD VERSION:



INGRESS PROTECTION RATING KEY:

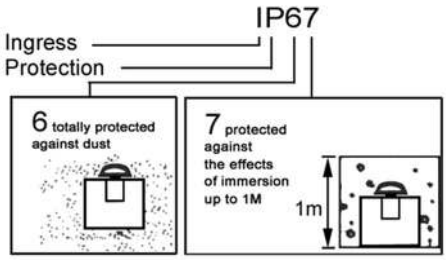

CIRCUIT FOR MICROSWITCH VERSION:



Copyright © 2015. ITW Switches 5/2015

ELECTRICAL – LED:

Typical fwd voltage (Vf at I operating):
2.2V

Forward current (I operating):
20mA

Max fwd voltage (Vf at I operating):
3.0V

KEY:

FL:
Version with flying leads

MS:
High current microswitch terminated version

ORDERING INFORMATION:

Series	Button Style	Body Style/ Termination	Button Colour*	LED Colour ***
49-59	1 - Round bezel 2 - Square bezel 3 - Round bezel illuminated	1 - Threaded, 500mm leads 2 - Threaded, 16-439088 ** 3 - Snap-In, 16-439088 **	1 - Black 2 - Red 3 - Green 4 - White 5 - Yellow 6 - Blue 7 - Orange	R - Red G - Green

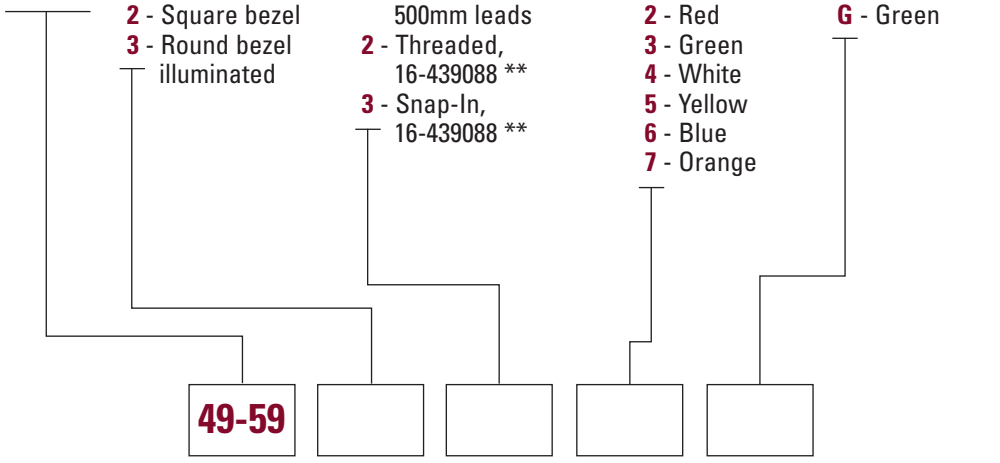

* Illuminated version only available with Black, Red & Green as standard. Non-standard colours subject to MOQ's

** Non-illuminated only

*** This digit is only required for illuminated switch

MECHANICAL / ELECTRICAL / ENVIRONMENTAL CHARACTERISTICS:

Travel (nom):
2.3mm

Life (min):
1,000,000 cycles

Operating force:
3N (FL)
3.8 – 5.5N (MS)

Panel thickness:
8mm max (FL)
2.5mm max (MS w/o washer)
1.5mm max (MS with washer)

Dielectric strength:
1000V a.c. for 1 min

Insulation resistance:
1GΩ @ 500V d.c.

Contact resistance:
150mΩ max initial inc leads (FL)
25mΩ max initial (MS)

Current rating:
400mA @ 32V a.c. res (FL)
100mA @ 50V d.c. res (FL)
125mA @ 125V a.c. res (FL)
10A @ 250V a.c. res (MS)

Life:
500,000 cycles (FL)
50,000 cycles @ 70°C (MS)

Ingress protection:
IP67 (Panel Sealed)

Vibration:
DEF STD 07-55

Non-illuminated Operating temperature range:
-55°C to +105°C

Illuminated Operating temperature range:
-35°C to +85°C

Body material:
PBT

Button material:
PBT

Contacts:
Gold plated (FL)
Silver (MS)

Salt mist:
BS2011 Part 2:1

Soldering information:
320°C max for 3s

Copyright © 2015. ITW Switches 5/2015

Designs and specifications are subject to change without notice due to product improvement.

ITW Switches
SENSORS, SWITCHES, ELECTRONIC CONTROLS

+ 44 (0) 2392 656200