Product datasheet
Characteristics

zcke05
limit switch head ZCKE - without lever left and right actuation

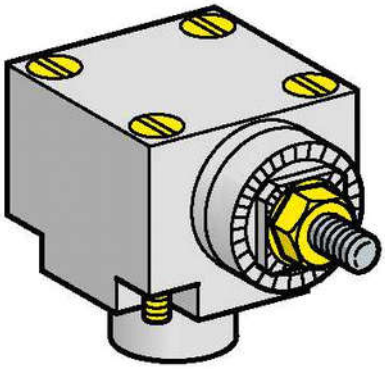

Main

Range of product	OsiSense XC
Series name	Standard format
Product or component type	Limit switch head
Device short name	ZCKE
Head type	Rotary head
Product compatibility	XCKJ
Associated lever	ZCKY11 ZCKY13 ZCKY14 ZCKY41 ZCKY43 ZCKY51 ZCKY52 ZCKY53 ZCKY59 ZCKY81 ZCKY91
Associated body	ZCKJ1 ZCKJ11 ZCKJ11H29 ZCKJ11H7 ZCKJ1H29 ZCKJ1H7 ZCKJ2 ZCKJ21 ZCKJ21H29 ZCKJ21H7 ZCKJ2H29 ZCKJ2H7 ZCKJ4 ZCKJ404 ZCKJ404H29 ZCKJ404H7 ZCKJ41 ZCKJ4104 ZCKJ4104H29 ZCKJ4104H7 ZCKJ41H29 ZCKJ41H7 ZCKJ4H29 ZCKJ4H7 ZCKJ5 ZCKJ5H29 ZCKJ5H7 ZCKJ6 ZCKJ6H29 ZCKJ6H7 ZCKJ7 ZCKJ7H29 ZCKJ7H7 ZCKJ8 ZCKJ8H29 ZCKJ8H7 ZCKJ9 ZCKJ9H29 ZCKJ9H7 ZCKJD31 ZCKJD31H29 ZCKJD31H7 ZCKJD35 ZCKJD35H29 ZCKJD35H7 ZCKJD37

The information provided in this documentation contains general descriptions and/or technical characteristics of the performance of the products contained herein.
This documentation is not intended as a substitute for and is not to be used for determining suitability or reliability of these products for specific user applications.
It is the duty of any such user or integrator to perform the appropriate and complete risk analysis, evaluation and testing of the products with respect to the relevant specific application or use thereof.
Neither Schneider Electric Industries SAS nor any of its affiliates or subsidiaries shall be responsible or liable for misuse of the information contained herein.

	ZCKJD37H29 ZCKJD37H7 ZCKJD39 ZCKJD39H29 ZCKJD39H7
Movement of operating head	Rotary
Type of operator	Without operating lever spring return
Type of approach	Lateral approach 1 or 2 programmable direction

Complementary

Switch actuation	From left and/or right CW and/or CCW
Positive opening	With
Head material	Metal

Environment

Ambient air temperature for operation	-25...70 °C
Ambient air temperature for storage	-40...70 °C
Environmental characteristic	Standard environment

Offer Sustainability

Sustainable offer status	Green Premium product
RoHS	Compliant - since 0851 - Schneider Electric declaration of conformity
Product environmental profile	Available
Product end of life instructions	Need no specific recycling operations