CAT 33 and CAP 43A

Linear actuator



Benefits

- Small
- Robust
- Highly efficient
- Lubricated for service life
- Digital encoder feedback

Technical data

		Unit	CAT 33 - AC version	CAT 33 - DC version	CAP 43A
Rated push load		N	800 to 3 000	800 to 3 000	1 000 to 3 000
Rated pull load		N	800 to 3 000	800 to 3 000	1 000 to 3 000
Speed (at full load)		mm/s	5 to 24[1)]	5 to 52[1)]	5 to 52[1)]
Stroke		mm	100 to 400	100 to 400	100 to 400
Retracted length		mm	S+150/158/189[2)]	S+150/158/189[2)]	S+150/158/189[2)]
Voltage		V AC	120, 230 or 400	–	–
		V DC	–	12 or 24	24
Power consumption	120 V AC	W	98 (brake 133,2 W)	–	–
	230 V AC	W	92 (brake 117,3 W)	–	–
	400 V AC	W	80	–	–
	12 or 24 V DC	W	–	N/A	N/A
Current consumption	120 V AC	A	0,82 (brake +0,29 A)	–	–
	230 V AC	A	0,4 (brake + 0,11 A)	–	–
	400 V AC	A	0,2	–	–
	12 V DC	A	–	18	–
	24 V DC	A	–	9	9
	24 V DC	A	–	5 (for motors C24CW and D24CW)	5
Duty cycle		%	30	15	15
Ambient temperature		°C	–20 to +50	–20 to +50	–20 to +50
Type of protection		IP	20/54/55	20/44/66 [1)]	44
Weight		kg	2 to 2,7	2 to 2,7	2,0 to 2,7

[1)] Depending on selected motor

[2)] Dimension depends on selected front attachment

Dimensional drawing – CAT 33 AC version

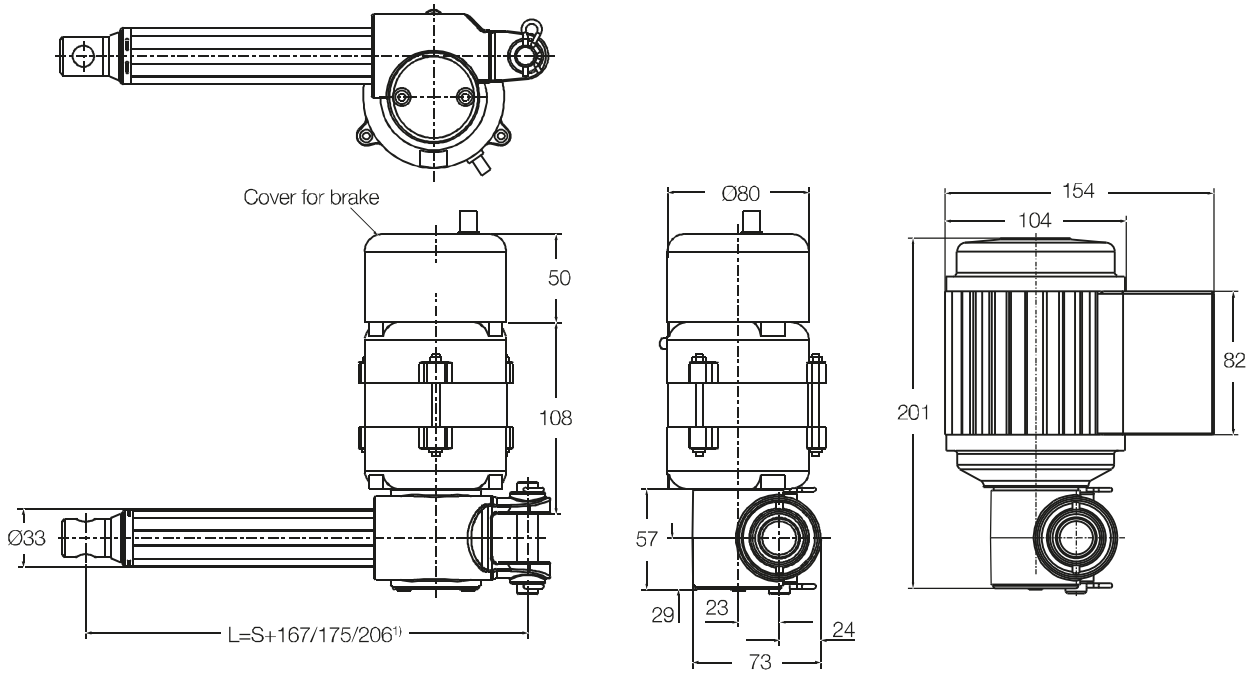

120 or 230 V AC motor

400 V AC motor

Legend:
S = stroke
L = retracted length

¹⁾ Dimension depends on selected front attachement

Dimensional drawing – CAT 33 DC version

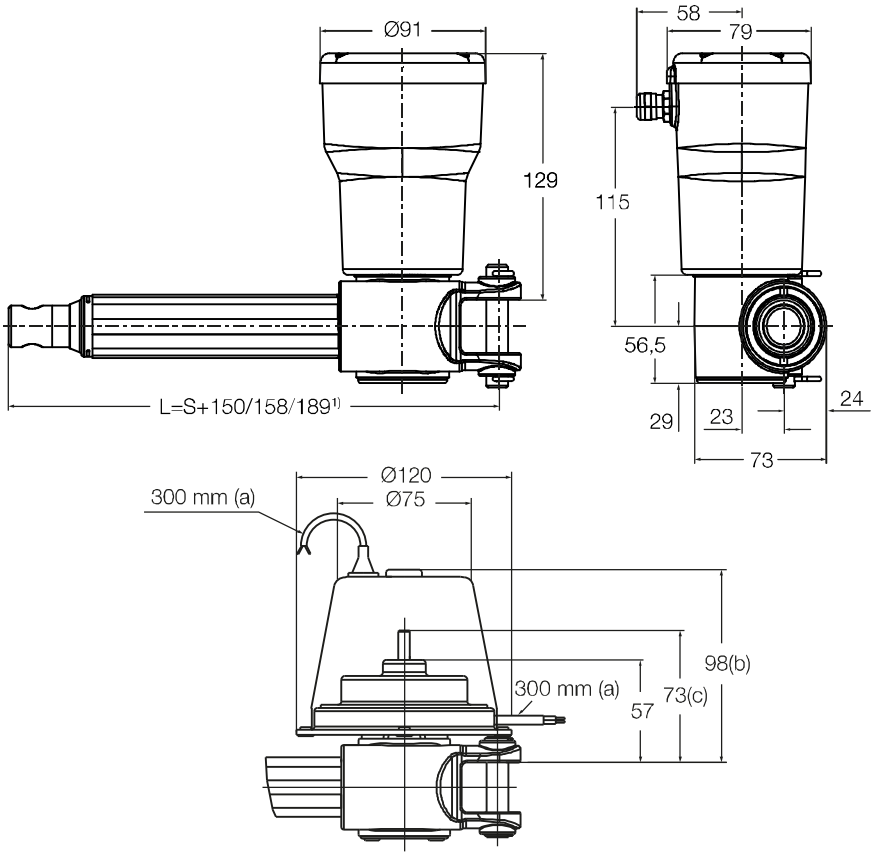

Legend:
S = stroke
L = retracted length
(a) = cable length
(b) = cover for brake (D24CB)
(c) = extended shaft (D24CS)

¹⁾ Dimension depends on selected front attachement

Dimensional drawing – CAP 43A

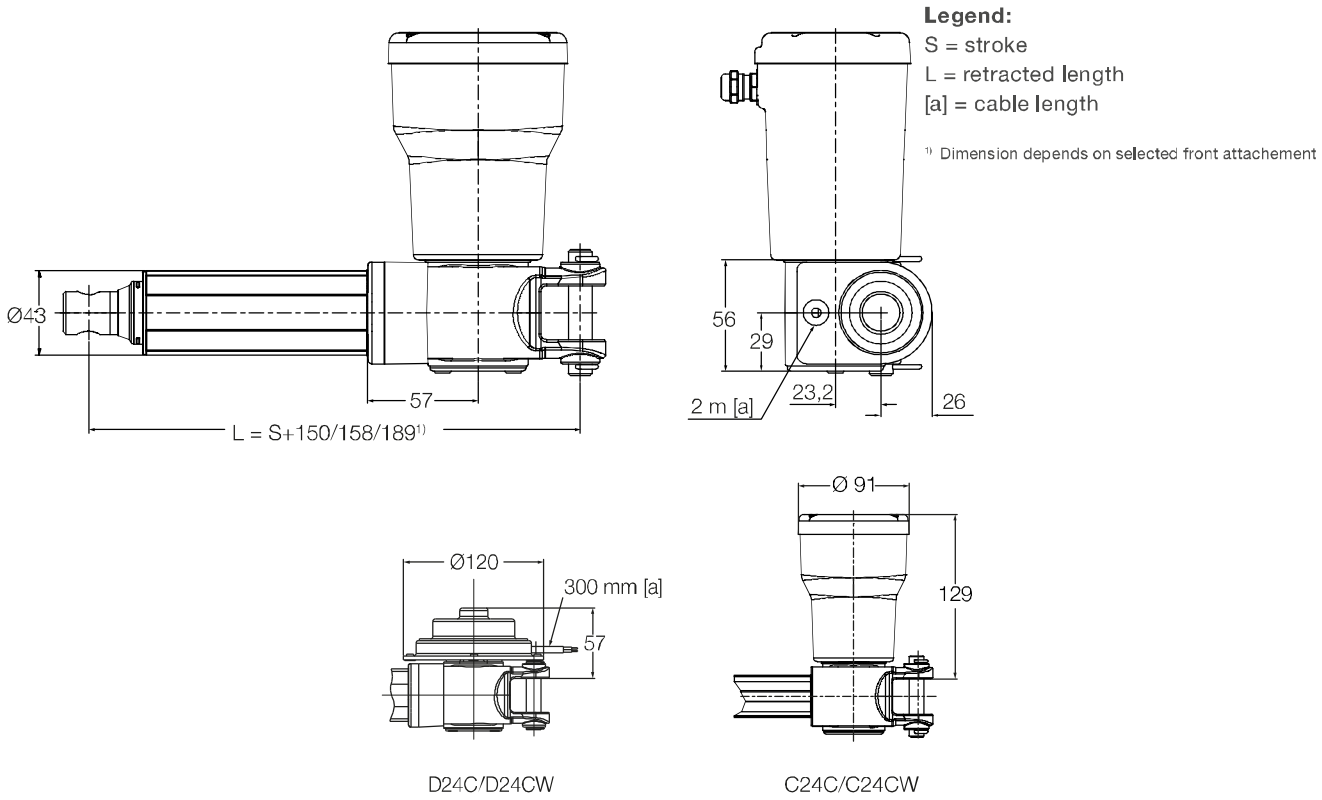

Connecting diagrams – CAT 33 AC version

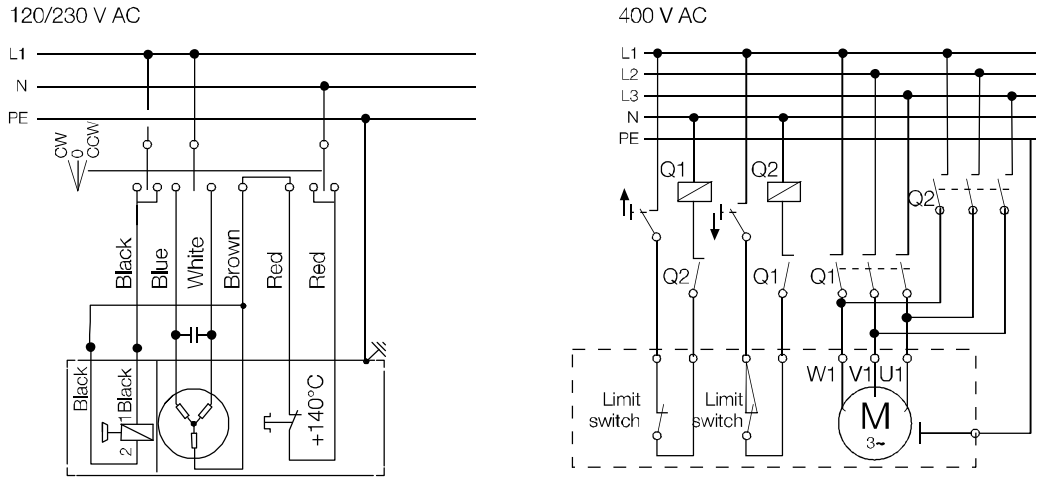

Connecting diagrams – CAT 33 DC version

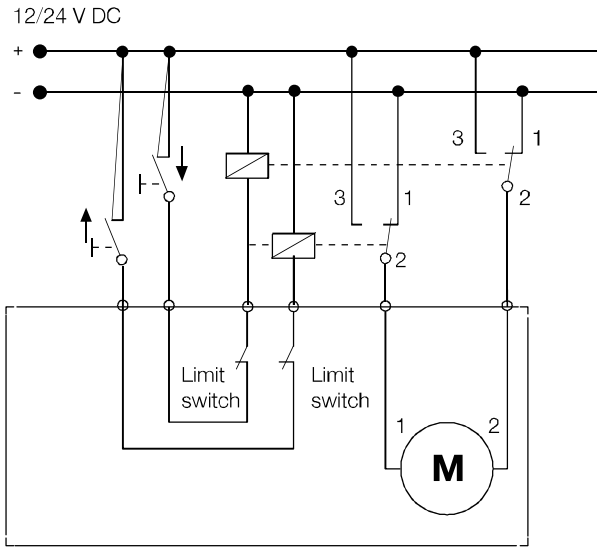

Connecting diagrams – CAP 43A

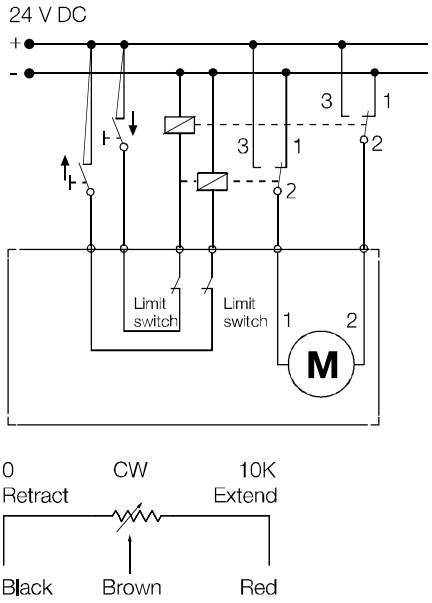

Connection diagram for linear potentiometer

Suitable control units and accessories AC version

	Limit switch	Encoder
	CAXD33	E2
E110C	•	•
E110CB	•	•
E220C	•	•
E220CB	•	•
E380C	•	•

Suitable control units and accessories DC version

	Control units	Encoder
	CAED 5-24R	E2
C12C		•
D12C		•
C24C		•
C24CW	•	•
D24C		•
D24CB		•
D24CS		•
D24CW	•	•

Performance diagrams – AC version

Speed-load diagram CAT 33 ... 120 V AC

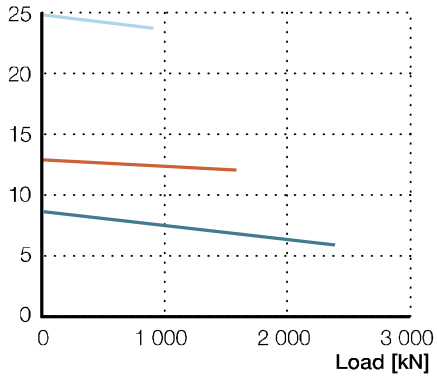

Speed-load diagram CAT 33 ... 230 V AC

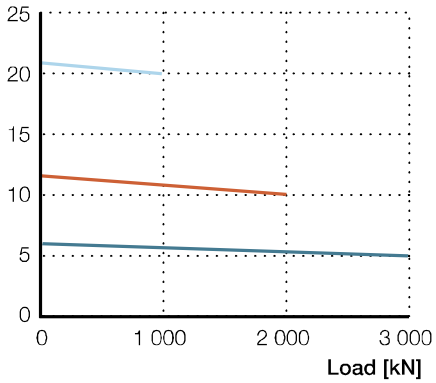

Speed-load diagram CAT 33 ... 400 V AC

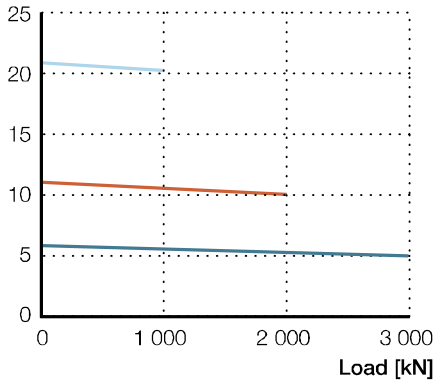

Current-load diagram CAT 33 ... 120 V AC

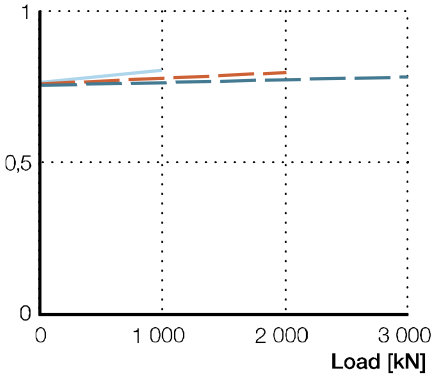

Current-load diagram CAT 33 ... 230 V AC

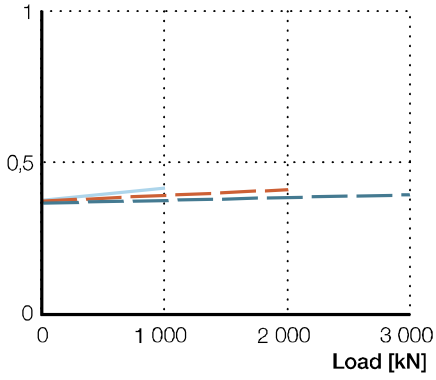

Current-load diagram CAT 33 ... 400 V AC

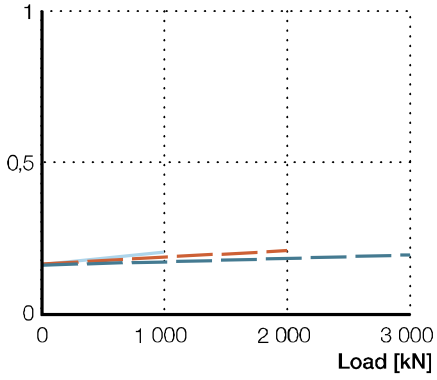

Gear 1 — V (mm/s) — I (A)
Gear 2 — V (mm/s) — I (A)
Gear 4 — V (mm/s) — I (A)

Duty cycle

CAT 33 ... 120 V AC

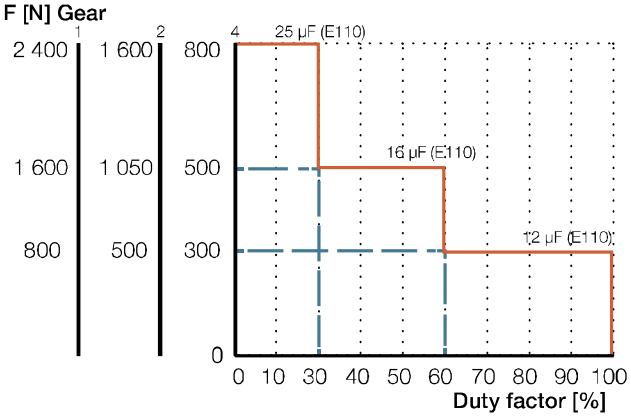

CAT 33 ... 230 V AC

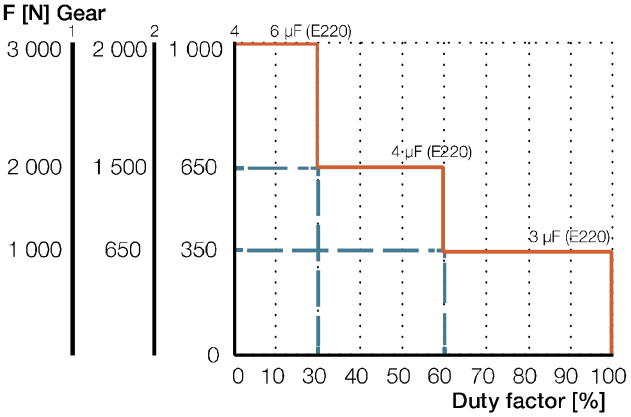

Performance diagrams – DC version

CAT 33.../C12C

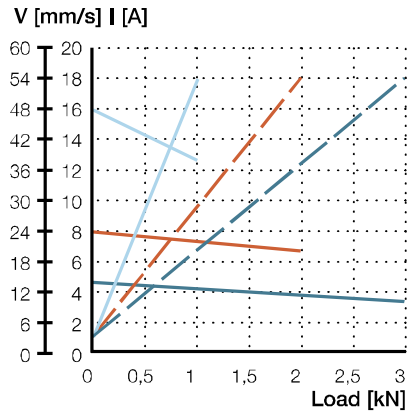

CAT 33.../C24C
CAP 43B.../C24C

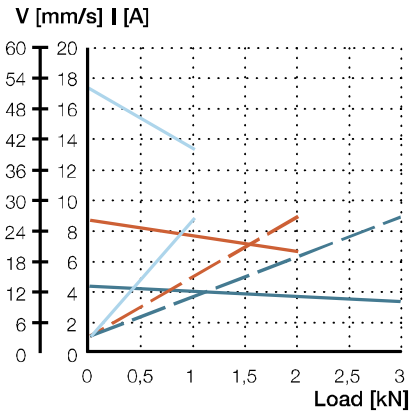

CAT 33.../C24CW
CAP 43B.../C24CW

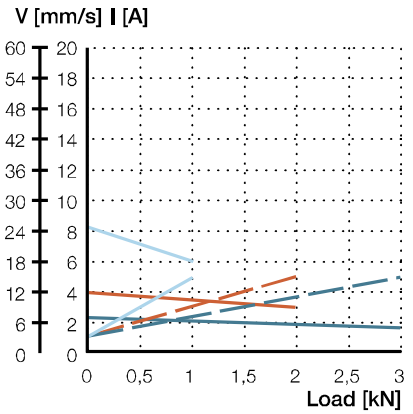

CAT 33.../D12C

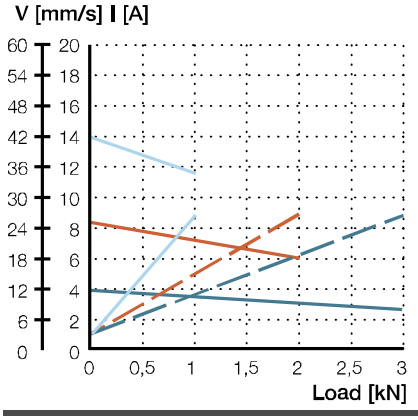

CAT 33.../D24C/D24CB/D24CS
CAP 43B.../D24C

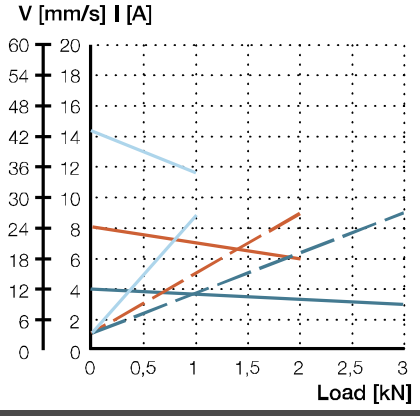

CAT 33.../D24CW
CAP 43B.../D24CW

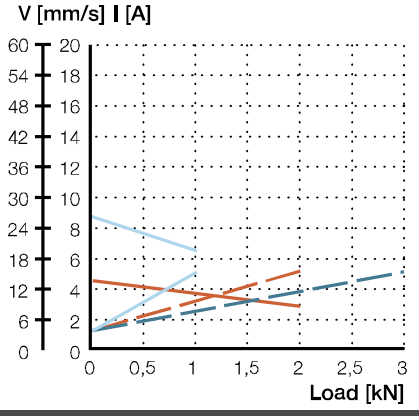

Gear 1 — V (mm/s) — I (A)
Gear 2 — V (mm/s) — I (A)
Gear 4 — V (mm/s) — I (A)

Duty cycle – DC version

Duty factor [%] at 20 °C

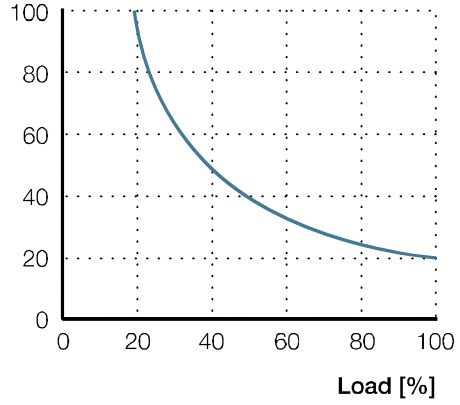

29

CAT 33 – Type codes for accessories and spare parts

Item code	Type code	Order N°
12 V DC motor (cylindrical motor)	C12C	M/0405535
12 V DC motor (flat motor)	D12C	M/0405518
24 V DC motor (cylindrical motor)	C24C	M/0405536
24 V DC motor (cylindrical with low speed)	C24CW	M/0405537
24 V DC motor (flat motor)	D24C	M/0405519
24 V DC motor (flat motor with brake)	D24CB	M/0405523
24 V DC motor (flat motor with extended shaft)	D24CS	M/0405522
24 V DC motor (flat motor with low speed)	D24CW	M/0405521
120 V AC motor (cylindrical motor)	E110C	M/0405533
120 V AC motor (cylindrical motor with brake)	E110CB	M/0405534
230 V AC motor (cylindrical motor)	E220C	M/0405531
230 V AC motor (cylindrical motor with brake)	E220CB	M/0405532
400 V AC motor (cylindrical motor)	E380C	M/0411607
Capacitor value 25 µF (120 V AC)	Capacitor 25 µF	M/0430670–06
Capacitor value 6 µF (230 V AC)	Capacitor 6 µF	M/0430670–03
Limit switch for any stroke, normally closed	CAXD33, NC	M/0440054
Limit switch for any stroke, normally open	CAXD33, NO	M/0440053
Front mounting attachments type Rod-end	575–32	M/0430575–32
Front mounting attachments type Clevis	576–32	M/0430576–32
Rear mounting attachments type Single ear bracket	580–32	M/0430580–32
Rear mounting attachments type Universal joint	582–32	M/0431780–32
Control unit (suitable for D24CW,C24CW motor)	CAED 5–24R	M/0420209

CAP 43A – Type codes for accessories and spare parts

Item code	Type code	Order N°
24 V DC motor (cylindrical motor)	C24C	M/0405536
24 V DC motor (cylindrical with low speed)	C24CW	M/0405537
24 V DC motor (flat motor)	D24C	M/0405519
24 V DC motor (flat motor with low speed)	D24CW	M/0405521
Front mounting attachments type Rod-end	575–32	M/0430575–32
Front mounting attachments type Clevis	576–32	M/0430576–32
Rear mounting attachments type Single ear bracket	580–32	M/0430580–32
Rear mounting attachments type Universal joint	582–32	M/0431780–32

Ordering key

Load [N] / Full Load Speed [mm/s]			Motor options	
3 000/xx	2 000/xx	1 000/xx	No motor	0000
2 400/6	1 600/12	800/24	120 V AC/60 Hz, 1-phase, IP54	E110C
2 400/6	1 600/12	800/24	120 V AC/60 Hz, 1-phase, brake, IP20	E110CB
3 000/5	2 000/10	1 000/20	230 V AC/50 Hz, 1-phase, IP54	E220C
3 000/5	2 000/10	1 000/20	230 V AC/50 Hz, 1-phase, brake, IP20	E220CB
3 000/5	2 000/10	1 000/20	400 V AC/50 Hz, 3-phase, IP55	E380C
3 000/xx	2 000/xx	1 000/xx	No motor	0000
3 000/13–10	2 000/24-20	1 000/48-38	12 V DC, IP44 (65)	C12C
2 400/ 11–7	1 600/21-15	800/39-21	12 V DC, flat motor, IP44	D12C
3 000/13–10	2 000/26-20	1 000/52-40	24 V DC, IP44 (65)	C24C
3 000/7–5	2 000/13-9	1 000/25-18	24 V DC, low speed, IP44 (65)	C24CW
3 000/12–9	2 000/25-18	1 000/43-35	24 V DC, flat motor, IP44	D24C
3 000/12–9	2 000/25-18	1 000/43-35	24 V DC, flat motor, brake, IP20	D24CB
3 000/12–9	2 000/25-18	1 000/43-35	24 V DC, flat motor, IP44, ext. shaft	D24CS
3 000/7–5	2 000/13-8	1 000/26-19	24 V DC, flat motor, low speed, IP44	D24CW

1 2 4

C A T 3 3 X X /

Type

Motor assembly
R Right
L Left

Stroke (S)
100 100 mm
200 200 mm
300 300 mm
400 400 mm
– – – Other stroke lengths

Rear attachment
A1 Fork ear, Ø12,0 mm
A2 Fork ear, Ø12,7 mm
K1 Single ear, Ø12,0 mm
K2 Single ear, Ø12,7 mm

Front attachment
G1 Hole, Ø12,0 mm
G2 Hole, Ø12,7 mm
G3 Male thread, M12
G4 Female thread, M12
G5 Fork ear, Ø10,1 mm

Feedback
– No encoder (no code)
E2 Encoder (for all standard motors)

Option
F Friction clutch (not available with option encoder)
Z No friction clutch

Option for CxxC motors
T2 Straight cable, 2,0 m, no plug
T2P Straight cable, 2,0 m, jack plug
T6 Straight cable, 6,0 m, no plug

■ Options shown in red are only available on request. Contact Ewellix for more information on minimum quantities and additional costs.