Foot-switch
Series F2

Description **F2-ZSDR/ZSDR**	Article number **6062500568**

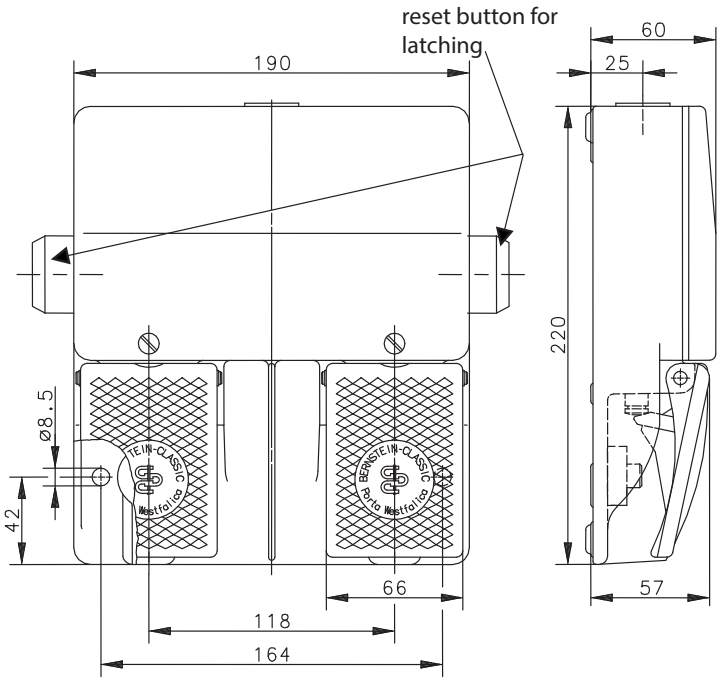

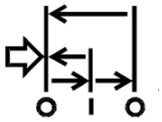

Switching symbol
(applies to both pedals)
(three-stage enable switch „Off-On-OFF“)

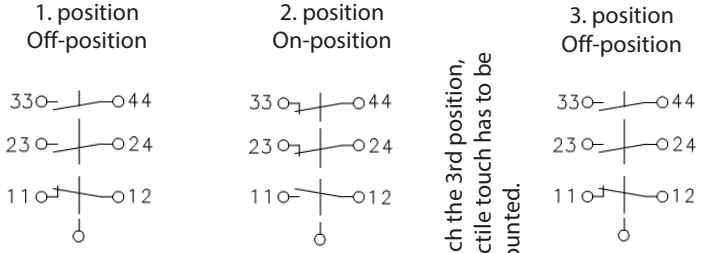

Operating diagram
(applies to both pedals)

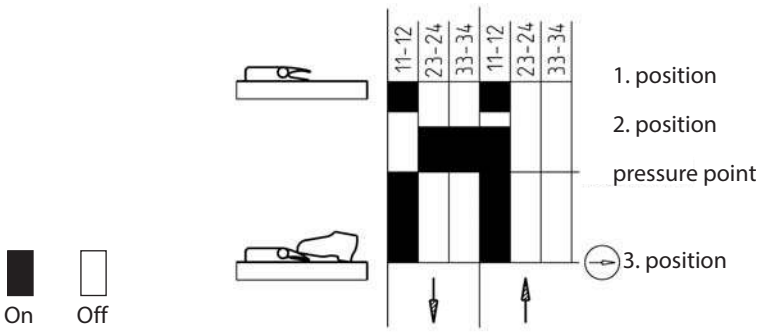

Electrical data		
Rated insulation voltage	U_i	250 V AC
Conv. thermal current	I_{the}	5 A
Rated impulse withstand voltage	U_{imp}	2,5 KV
Rated operational voltage	U_e	240 V and 24 V DC
Utilization category		AC-15, U_e / I_e 240 V AC / 1,5 A 50-60 Hz DC-13, U_e / I_e 24 V DC / 1,0 A
Direct opening action	⊖	acc. to IEC/EN 60947-5-1, Annex K
Short-circuit protective device		D-Fuse 4 A gG
Protection class		I

Mechanical data		
Enclosure		AL, die-cast
Cover		AL, die-cast
Actuator		Foot lever (PA)
Ambient air temperature		Operating temperature range: -10 °C to +50 °C Storage temperature range: -25 °C to +70 °C
Contact type		1 NC, 1 NO. (Zb)
Operating force (pedal centre)	1. position 2. position	10 N 25 N
Pressure point (right pedal)		≈ 200 N
Mechanical life Sequence of the switching position	: 1 – 2 – 1 or: 1 – 2 – 3 – 1	10 x 10^6 operating cycles 1 x 10^6 operating cycles
Switching frequency		max. 50/min
Assembly		2 x M8
Connection		screw connections (M3,5)
Protection ground		2 x M4
Conductor cross-sections		Solid: 0,5 – 1,5 mm^2 Litz wire with ferrules: 0,5 – 1,5 mm^2
Cable entrance		1 x M20 x 1,5
Weight		≈ 1,9 kg
Protection type		IP67 in accordance with IEC/EN 60529

ID for safety engineering	
B10d - value	1 x 10^5 cycles

Regulations	
	VDE 0660 T100, DIN EN 60947-1, IEC 60947-1
	VDE 0660 T200, DIN EN 60947-5-1, IEC 60947-5-1
	DIN EN 61326-3-1
	DIN EN 60947-5-8; GS-ET-22
	DIN EN ISO 13849-1

EU Conformity	
	acc. to directive 2014/35/EU

Approvals
$_{c}UL_{US}$
DGUV

Function
Normally open contacts: 23 – 24, 33 – 44; Signalling contact: 11 – 12 • Position 1: OFF position of the operating contacts (the pedal is not actuated) • Position 2: ON position of the operating contacts (the pedal is actuated to as far as the pressure point) • Position 3: OFF position of the operating contacts (the three-stage enable switch is locked) If the three-stage enable switch is actuated in position 2, it returns to position 1 when it is released. The threestage enable switch changes from position 2 to position 3, if it gets further pressed under after the resistance of the pressure point. The switch is locked in position 3 and can only be returned in position 1 by pressing the release button. The actuation of the operating contacts is made by a positive opening. The operating contacts are opened in the return stroke.

Notes
The specified protection classification (IP code) applies only when the cover is closed and the appropriate cable is used, in accordance with the clamping range of the above mentioned cable gland.