Nexus 105 Sounder Beacon (DC)

The Nexus 105 is a high output, low current consumption sounder beacon designed for fire and industrial applications. Connections are made to the base during the initial wiring phase which results in faster and more reliable installation. In addition, the head is fixed by quarter turn fasteners avoiding the need to screw up four individual screws thus enabling faster installation and accurate seal compression for weatherproofing. The Nexus Sounder Beacon is available with a high efficiency LED or high output xenon beacon. The combination of a powerful sounder and high output beacon ensures a very effective audio-visual signal. 110dB and 120dB units, as well as AC variants, are also available.

Features

- **High sound output: 113dB (max); 105dB (typical)**
- **5J xenon or high efficiency LED beacon option**
- **Quarter turn fasteners for ease of installation**
- **First-fix, wire to base technology**
- **IP66 rated**
- **Three alarm stages**
- **Low in-rush current (LED only)**
- **Static/flashing mode (LED only)**
- **Volume control for greater flexibility - 20dB**
- **64 tones**
- **Separate connections for sounder & beacon**

Lens Colour Options





Applications - Fire alarm; conveyors; process control alarm; cranes; moving machinery; general signalling; marine

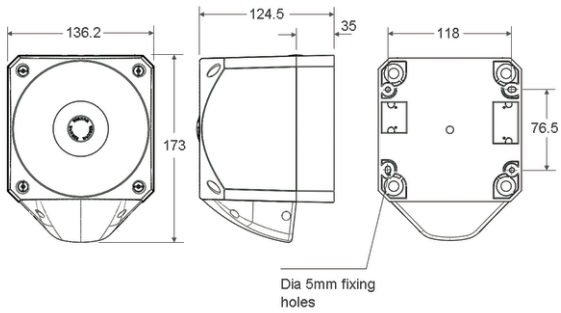

Specifications

Part No.	Lens Colour	Beacon Type	Audibility at 1m	Tones	Voltage	Sounder Current	Beacon Current
PNC-0001	Red lens	Xenon beacon	Up to 113dB (A)	64	10-60V DC	8-40mA	330mA@24V DC
PNC-0002	Amber lens	Xenon beacon	Up to 113dB (A)	64	10-60V DC	8-40mA	330mA@24V DC
PNC-0020	Clear lens	Xenon beacon	Up to 113dB (A)	64	10-60V DC	8-40mA	330mA@24V DC
PNC-0043	Blue lens	Xenon beacon	Up to 113dB (A)	64	10-60V DC	8-40mA	330mA@24V DC
PNC-0041	Green lens	Xenon beacon	Up to 113dB (A)	64	10-60V DC	8-40mA	330mA@24V DC
PNC-0024	Red lens	LED beacon	Up to 113dB (A)	64	10-60V DC	8-40mA	18mA/65mA**
PNC-0028	Amber lens	LED beacon	Up to 113dB (A)	64	10-60V DC	8-40mA	18mA/65mA**
PNC-0045	Clear lens	LED beacon	Up to 113dB (A)	64	10-60V DC	8-40mA	18mA/65mA**
PNC-0047	Blue lens	LED beacon	Up to 113dB (A)	64	10-60V DC	8-40mA	18mA/65mA**
PNC-0046	Green lens	LED beacon	Up to 113dB (A)	64	10-60V DC	8-40mA	18mA/65mA**

** Flashing/Static current consumption figures.

IP Rating: IP66 **Operating Temp:** -25°C to +70°C **Cable Entries:** 5 **Weight:** 0.8kg
Compliance: EN54-3 Type

klaxon
Signalling Solutions