Your Expert Partner for **Human Machine Interfaces**

Lens

Distribution by
Rs-online

70-
921.9



https://rs-online.eao.com/component/70-921.9/...

Your product:



70-921.9
Lens

FRONT

Front form:	Square

OPERATING-/INDICATION PART

Lens colour:	White
Lens material:	Plastic
Lens illumination:	Illuminated
Lens shape:	Flush
Lens optics:	translucent

MECHANICAL CHARACTERISTICS

Weight:	0.001 kg

CERTIFICATE

REACH:	REACH compliant
RoHS:	RoHS compliant

OTHER

Short Description:	Lens, 15.4 mm x 15.4 mm, Illuminated, White, Flush, Plastic
Dimension:	15.4 mm x 15.4 mm
Dimension drawings:	

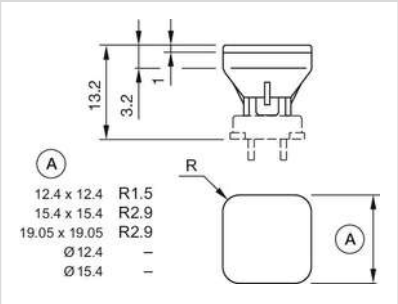

A = Front dimension