INSTRUCTION MANUAL (ATEX)
BExS120E and BExS110E
Flameproof / Increased Safety Sounders

1) Introduction

The BExS120E and BExS110E are second generation flameproof / increased safety sounders which are certified to the European Standards EN 50014: 1992, EN 50018: 1994 and EN50019: 1994 and meet the requirements of the ATEX directive 94/9/EC. The sounders produce loud warning signals and can be used in hazardous areas where potentially flammable atmospheres may be present. Thirty-two different first stage alarm sounds can be selected by internal switches, and each one can be externally changed to a second or third stage alarm sound (*see tone table on Page 4*). The BExS120E unit produces output levels in the 117dB(A) range and the BExS110E unit produces output levels in the 110dB(A) range. Both sounders can be used in Zone 1 and Zone 2 areas with gases in groups IIA, IIB and IIC and temperature Classifications of T1, T2, T3 and T4.

2) Marking

All units have a rating label, which carries the following important information:-

Unit Type No. BExS120E or BExS110E

Input Voltage: DC Units 12V or 24V or 48V
AC Units 230V or 110V or 115V

Code: EEx de IIC T4 ($T_{amb.}$ –50 to +55°C)

Certificate No. KEMA 99ATEX6312

Epsilon x:
Gas Group and Category: **II 2G**

CE Marking:
Notified Body No. **0344**

Warnings: DO NOT OPEN WHEN AN EXPLOSIVE GAS ATMOSPHERE IS PRESENT

COVER BOLTS CLASS A4-80

USE HEAT RESISTING CABLES AND CABLE GLANDS (Rated 95ºC) AT AMB. TEMPERATURES OVER 40ºC

Year of Construction / Serial No. i.e. 02 / 1S32000001

3) Type Approval Standards

The sounders have an EC Type examination certificate issued by KEMA and have been approved to the following standards:-

EN 50014 : 1992 + prA1General Requirements
EN 50018 : 1994 + prA1 Flameproof Enclosure 'd'
EN 50019 : 1994 + prA1Increased Safety 'e'

4) Installation Requirements

The sounders must be installed in accordance with the latest issues of the relevant parts of the BS EN 60079 specifications or the equivalent IEC specifications – Selection, Installation and maintenance of electrical apparatus for use in potentially explosive atmospheres (other than mining applications or explosive processing and manufacture):-

BS EN 60079-14 : 1997	Electrical Installations in Hazardous Areas (other than mines)
BS EN 60079-10 : 1996	Classification of Hazardous Areas

The installation of the units must also be in accordance with any local codes that may apply and should only be carried out by a competent electrical engineer who has the necessary training.

5) Zones, Gas Group, Category and Temperature Classification

The BExS120E and BExS110E sounders have been certified EEx de IIC T4 (Tamb. –50 to +55ºC). This means that the units can be installed in locations with the following conditions: -

Area Classification:

Zone 1	Explosive gas air mixture likely to occur in normal operation.
Zone 2	Explosive gas air mixture not likely to occur, and if it does, it will only exist for a short time.

Gas Groupings:

Group IIA	Propane
Group IIB	Ethylene
Group IIC	Hydrogen and Acetylene

Equipment Category: 2G

Temperature Classification:

T1	400° C
T2	300° C
T3	200° C
T4	135° C

Ambient Temperature Range:

-50°C to +55°C

6) Sounder Location and Mounting

The location of the sounders should be made with due regard to the area over which the warning signal must be audible. The sounders should only be fixed to services that can carry the weight of the unit.

The sounder should be securely bolted to a suitable surface using the 7mm diameter boltholes in the stainless steel U shaped mounting bracket (see figure 1). The angle can then be adjusted in the direction that the sound is primarily required to cover. This can be achieved by loosening the two large bracket screws in the side of the unit, which allow adjustment in steps of 18°. On completion of the installation the two large bracket adjustment screws on the side of the unit must be fully tightened to ensure that the sounder cannot move in service.

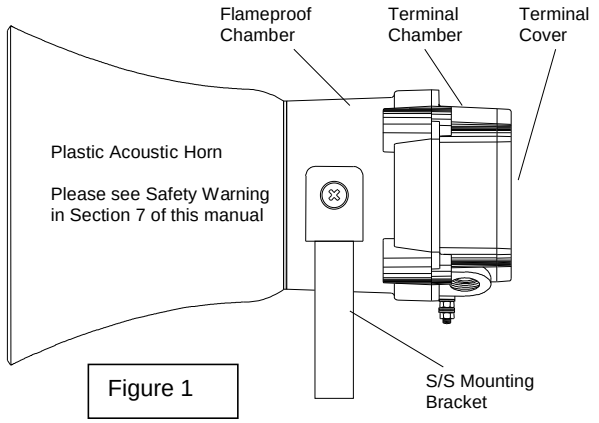

Figure 1

7) Safety Warning (Electrostatic Hazard)

The acoustic horn section is made of ABS Plastic, therefore to avoid a possible ELECTROSTACTIC CHARGE the unit must only be cleaned with a damp cloth.

8) Access to the Flameproof Enclosure

In order to change the tone or adjust the output level of the sounder it is necessary to remove the terminal chamber section to gain access to the flameproof chamber. To achieve this remove the four M6 hexagon socket head screws (see figure 2) and withdraw the terminal chamber taking extreme care not to damage the flameproof joints in the process.

Note the four **M6 screws are Class A4-80 stainless steel and only screws of this category can be used on these sounders.** It is therefore important that these screws and their spring washers are kept in a safe place during installation.

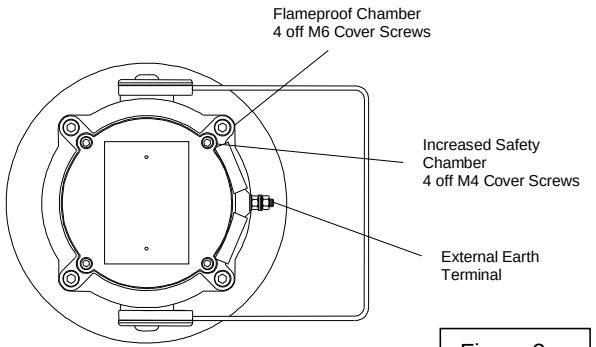

Figure 2

On completion of the tone selection and adjustment the flameproof joints should be inspected to ensure that they are clean and that they have not been damaged during installation. Also check that the earth bonding wire between the two casting sections is secure and that the 'O' ring seal is in place. When replacing the terminal chamber section casting, ensure that it is square with the flameproof chamber casting before inserting. Carefully push the section in place allowing time for the air to be expelled. Only after the section is fully in place should the four M6 Stainless Steel A4-80 cover bolts and their spring washers be inserted and tightened down. If the section jams while it is being inserted, carefully remove it and try again. Never use the M6 cover bolts to force the cover into position.

9) Access to the Increased Safety Terminal Chamber

To connect the cables to the sounder it is necessary to remove the terminal cover to gain access to the termination chamber. To achieve this remove the four M4 hexagon socket head screws (see figure 2). The four M4 screws and their spring washers are grade A4 stainless steel and they should be kept

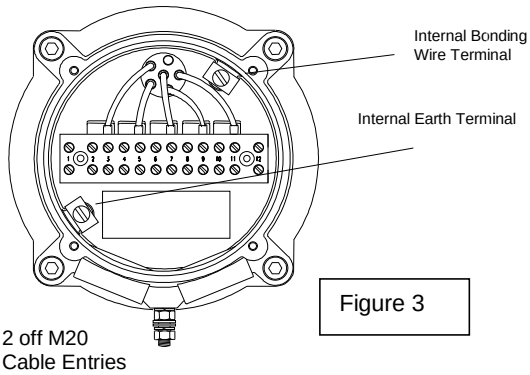

Figure 3

in a safe place during installation. Before replacing the terminal cover ensure that the earth bonding wire between the two castings is secure and that the 'O' ring seal is in place. Insert the four M4 hexagon screws and their spring washers and tighten them down.

10) Power Supply Selection

It is important that a suitable power supply is used to run the sounders. The power supply selected must have the necessary capacity to provide the input current to all of the sounders connected to the system.

The following table shows the input current taken by the various sounder units:-

Unit Type	Input Voltage	Input Current	Max. I/P Volts
BExS120E	24V DC	800mA	30V
BExS120E	12V DC	850mA	15V
BExS120E	48V DC	420mA	58V
BExS120E	230V AC	90mA	264V
BExS120E	110V AC	200mA	121V
BExS120E	115V AC	180mA	126V

BExS110E	24V DC	265mA	30V
BExS110E	12V DC	195mA	15V
BExS110E	48V DC	130mA	58V
BExS110E	230V AC	56mA	264V
BExS110E	110V AC	93mA	121V
BExS110E	115V AC	110mA	126V

The input current will vary according to the voltage input level and the frequency of the tone selected. The current levels shown above are for the 440Hz Continuous tone @ nominal input voltage. The 24V and 48V DC units and the 230V AC, 115V AC and 110V AC units have a switching voltage regulator circuit and therefore the input current level will decrease slightly as the input voltage in increased and will increase slightly as the input voltage is reduced. The 12V units do not have a voltage regulator and therefore their input current will increase when the input voltage is increased.

The above table also shows the maximum voltages at which the sounders can be operated.

10) Cable Selection

When selecting the cable size consideration must be given to the input current that each unit draws (see table above), the number of sounders on the line and the length of the cable runs. The cable size selected must have the necessary capacity to provide the input current to all of the sounders connected to the line.

SAFETY WARNING: If the high output BExS120E sounders are used at high ambient temperatures, i.e. over +40ºC, then the cable entry temperature may exceed +70ºC and therefore suitable heat resisting cables must be used, with a rated service temperature of at least 95ºC.

11) Earthing

Both AC and DC sounder units must be connected to a good quality earth. The units are provided with internal and external earthing terminals which are both located on the terminal chamber section of the unit (see figures 2 and 3).

When using the external earth terminal a cable crimp lug must be used. The cable lug should be located between the two M5 stainless steel flat washers. The M5 stainless steel spring washer must be fixed between the outer flat washer and the M5 stainless steel nut to ensure that the cable lug is secured against loosening and twisting.

The internal earth bonding wires ensure that a good quality earth is maintained between the flameproof chamber casting, the terminal section casting and the terminal cover casting.

12) Cable Glands

The BExS120E and BExS110E sounders have dual cable gland entries which have an M20 x1.5 entry thread as standard or a PG13.5 thread as a special. Only cable glands approved for Ex 'e' applications or better (i.e. Ex 'd' applications) can be used. They must be suitable for the type of cable to be used and also meet the requirements of the Ex equipment installation standard BS EN 60079-14: 1997.

SAFETY WARNING: If the high output BExS120E sounders are used at high ambient temperatures, i.e. over +40ºC, then the cable entry temperature may exceed +70ºC and therefore suitable heat resisting cable glands must be used, with a rated service temperature of at least 95ºC.

If a high IP (Ingress Protection) rating is required then a suitable sealing washer must be fitted under the cable gland.

When only one cable entry is used the other one must be closed with an Ex 'e' blanking plug, which must be suitably approved for the installation requirements.

13) Cable Connections

The cable connections are made into an EEx e II approved twelve way terminal block which is located in the Increased Safety Area terminal chamber (see figure 3). See section 9 of this manual for access to the terminal chamber. When wiring into Increased Safety Area terminal enclosures, you are only permitted to connect one wire into each way on the terminal block. Therefore in order that sounders can be connected in a parallel line, the terminal block is fitted with approved connecting combs so that each electrical connection has two terminals in parallel. Terminal No's. 1 and 12 must not be used on either AC or DC sounders. Cables with a cross-sectional area of up to 4mm² can be connected to the terminal block. Cables that have a small cross-sectional area should be fitted with crimp ferules.

The wiring connections to the sounders are the same for both the BExS110E units and BExS120E units and are as follows:-

Terminal No's	DC Units	AC Units
2 and 3	Not Used	S3
4 and 5	+ve	S2
6 and 7	-ve	C
8 and 9	S2	N
10 and 11	S3	L

14) Tone Selection and 2nd & 3rd Stage Alarms

The BExS120E and BExS110E sounders have 32 different tones that can be selected for the first stage alarm. The sounders can then be switched to sound second and third stage alarm tones. The tones are selected by operation of a DIP switch on the pcb in the flameproof enclosure for both DC and AC units (see figures 4 and 5). For access to the flameproof enclosure see section 8 of this instruction manual. The tone table on page four shows the switch positions for the 32 tones and which tones are available for the second and third stages. To operate the sounder on stage one simply connect the supply voltage to the normal supply terminals (+ve and –ve for DC units, L and N for AC units), see connection detail in section 12 of this instruction manual.

The operation of the second and third stages is different for DC and AC units.

DC Units Second and Third Stage Tone Selection

The BExS120E and BEx110E DC sounders have the facility to use either +ve or –ve switching to change the tone to the second and third stages. For –ve switching connect the two headers on the pcb to the left-hand (marked –ve) and centre pins. For +ve switching connect the headers to the right hand (marked +ve) and the centre pins. To change to the second

stage tone, connect either a -ve or +ve supply line to terminal S2 in the terminal chamber, depending on which switching mode is being used, while maintaining the dc supply to the +ve and –ve terminals. Similarly for the third stage tone, connect a -ve or +ve supply line to terminal S3. The supply to the S3 terminal will automatically override a supply to the S2 terminal.

AC Units Second and Third Stage Tone Selection

To select the second and third stage tones on the BExS120E and BExS110E AC sounders the Common (C) terminal on the terminal block in the terminal chamber is connected to the S2 terminal for the second stage tone and the S3 terminal for the third stage tone.

15) Volume Control

All BExS120E and BExS110E sounders, with the exception of 12V DC units, have a volume control to adjust the output level. To set the required output level, adjust the potentiometer on the pcb in the flameproof enclosure. See section 8 of this instruction manual for access to the flameproof enclosure. For maximum output level the potentiometer should be set to the fully clockwise position.

16) End of Line Monitoring (DC Units)

On BExS120E and BExS110E DC sounders, dc reverse line monitoring can be used if required. All DC sounders have a blocking diode fitted in their supply input lines. An end of line monitoring diode or an end of line monitoring resistor can be connected across the terminals provided in the flameproof enclosure. **Note monitoring components must not be connected to the terminal block in the Increased Safety terminal chamber.** See section 8 of this instruction manual for access to the flameproof enclosure.

If an end of line resistor is used it must have a minimum resistance value of 3k3 ohms and a minimum wattage of 0.5 watts or a minimum resistance value of 500 ohms and a minimum wattage of 2 watts.

BExS110E Sounder

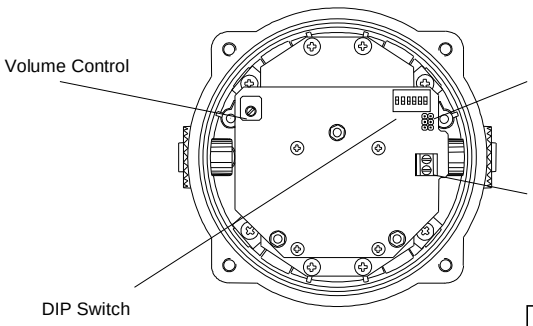

Figure 4

BExS120E Sounder

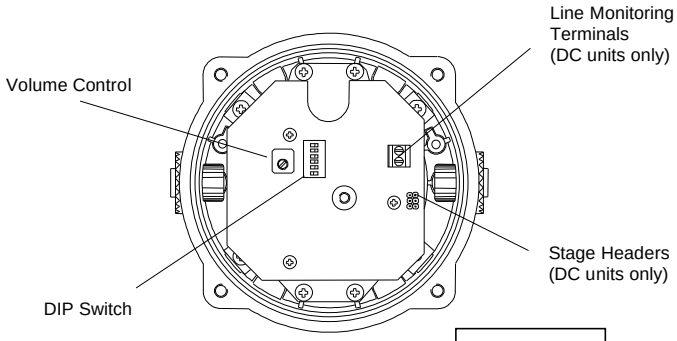

Figure 5

TONE SELECTION TABLE

Tone Selection		DIP Switch Settings	Stage Selection	
Stage 1	**Frequency Description**	**1 2 3 4 5**	**Stage 2**	**Stage 3**
1	Continuous 1000Hz ***Toxic gas alarm***	0 0 0 0 0	Tone 31	Tone 11
2	Alternating 800/1000Hz at 0.25s intervals	1 0 0 0 0	Tone 17	Tone 5
3	Slow Whoop 500/1200Hz at 0.3Hz with 0.5s gap repeated	0 1 0 0 0	Tone 2	Tone 5
4	Sweeping 800/1000 at 1Hz	1 1 0 0 0	Tone 6	Tone 5
5	Continuous at 2400Hz	0 0 1 0 0	Tone 3	Tone 27
6	Sweeping 2400/2900Hz at 7Hz	1 0 1 0 0	Tone 7	Tone 5
7	Sweeping 2400/2900Hz at 1Hz	0 1 1 0 0	Tone 10	Tone 5
8	Siren 500/1200/500Hz at 0.3Hz	1 1 1 0 0	Tone 2	Tone 5
9	Sawtooth 1200/500Hz at 1Hz	0 0 0 1 0	Tone 15	Tone 2
10	Alternating 2400/2900Hz at 2Hz	1 0 0 1 0	Tone 7	Tone 5
11	Intermittent 1000Hz at 0.5Hz ***General alarm***	0 1 0 1 0	Tone 31	Tone 1
12	Alternating 800/1000Hz at 0.875Hz	1 1 0 1 0	Tone 4	Tone 5
13	Intermittent 2400Hz at 1Hz	0 0 1 1 0	Tone 15	Tone 5
14	Intermittent 800Hz 0.25s on 1s off	1 0 1 1 0	Tone 4	Tone 5
15	Continuous at 800Hz	0 1 1 1 0	Tone 2	Tone 5
16	Intermittent 660Hz 150mS on, 150mS off	1 1 1 1 0	Tone 18	Tone 5
17	Alternating 544Hz (100mS)/440Hz(400mS)	0 0 0 0 1	Tone 2	Tone 27
18	Intermittent 660Hz 1.8s on, 1.8s off	1 0 0 0 1	Tone 2	Tone 5
19	1400Hz to 1600Hz sweep up over 1s - 1600Hz to 1400Hz sweep down over 0.5s	0 1 0 0 1	Tone 2	Tone 5
20	Continuous 660Hz	1 1 0 0 1	Tone 2	Tone 5
21	Alternating 554/440Hz at 1Hz	0 0 1 0 1	Tone 2	Tone 5
22	Intermittent 554Hz at 0.875Hz	1 0 1 0 1	Tone 2	Tone 5
23	800Hz pulsing at 2Hz	0 1 1 0 1	Tone 6	Tone 5
24	Sweeping 800/1000Hz at 50Hz	1 1 1 0 1	Tone 29	Tone 5
25	Sweeping 2400/2900Hz at 50Hz	0 0 0 1 1	Tone 29	Tone 5
26	Simulated bell sound	1 0 0 1 1	Tone 2	Tone 1
27	Continuous 554Hz	0 1 0 1 1	Tone 26	Tone 5
28	Continuous 440Hz	1 1 0 1 1	Tone 2	Tone 5
29	Sweeping 800/1000Hz at 7Hz	0 0 1 1 1	Tone 7	Tone 5
30	420Hz repeating 0.625s on, 0.625s off ***Australian alert signal***	1 0 1 1 1	Tone 32	Tone 5
31	1200/500Hz at 1 Hz ***Prepare to abandon platform***	0 1 1 1 1	Tone 11	Tone 1
32	Sweeping 500/1200Hz 3.75s on, 0.25s off 15Hz	1 1 1 1 1	Tone 26	Tone 1