Max. 38 m³/h

DC axial fans

☐ 40 x 28 mm



- **Material:** Housing: GRP[1] (PBT)
  Impeller: GRP[1] (PA)
- **Direction of air flow:** Exhaust over struts
- **Direction of rotation:** Counterclockwise, looking towards rotor
- **Connection:** Via single wires AWG 28, UL 1061
- **Weight:** 45 g

- **Possible special versions:**
  (See chapter DC fans - specials)
  - Speed signal
  - Go / NoGo alarm
  - External temperature sensor
  - PWM control input
  - Moisture protection
  - Salt spray protection

1) Fiberglass-reinforced plastic

Series 420 J **Nominal data**	Air flow	Air flow	**Nominal voltage**	Voltage range	Sound pressure level	Sound power level	Sintec sleeve bearings Ball bearings	Power consumption	Nominal speed	Temperature range	Service life L_{10} (40 °C) ebm-papst standard Service life L_{10} (T_{max}) ebm-papst standard	Life expectancy L_{10IPC} (40 °C) see page 17	Curve
Type	**m³/h**	**cfm**	**VDC**	**VDC**	**dB(A)**	**Bel(A)**	**□/■**	**Watts**	**rpm⁻¹**	**°C**	**Hours**	**Hours**	
422 JM	24	14.2	**12**	8...13.8	42	5.5	■	2.4	11 400	-20...+70	75 000 / 37 500	127 500	①
422 JN	31	18.3	**12**	8...13.8	48	6.0	■	4.1	14 250	-20...+70	67 500 / 35 000	115 000	②
422 JH	38	22.4	**12**	8...13.8	54	6.6	■	6.9	17 250	-20...+70	60 000 / 30 000	102 500	③
424 JM	24	14.2	**24**	16...28	42	5.5	■	2.7	11 400	-20...+70	75 000 / 37 500	127 500	①
424 JN	31	18.3	**24**	16...28	48	6.0	■	4.3	14 250	-20...+70	67 500 / 35 000	115 000	②
424 JH	38	22.4	**24**	16...26.4	54	6.6	■	6.9	17 250	-20...+65	60 000 / 32 500	102 500	③

Subject to change

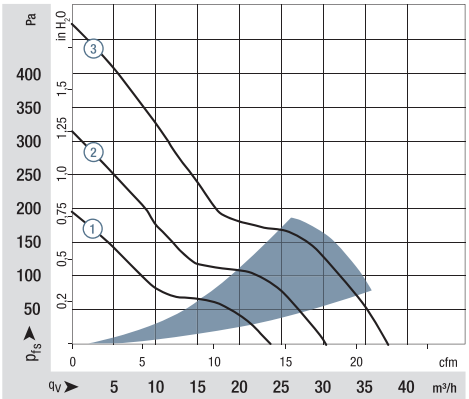

Air performance measured according to: ISO 5801.
Installation category A, without contact protection.
Noise: Total sound power level L_{WA} ISO 103002 measured on a hemisphere with a radius of 2 m.
Sound pressure level L_{pA} measured at 1 m distance from fan axis.
The values given are applicable only under the specified measuring conditions and may differ depending on the installation conditions.
In the event of deviation from the standard configuration, the parameters must be checked after installation!
For detailed information see
http://www.ebmpapst.com/general conditions

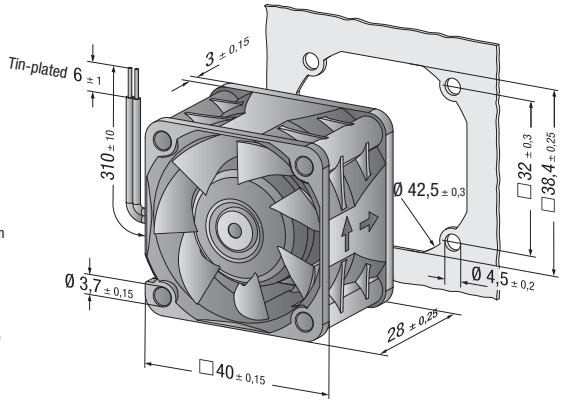

ebmpapst