Specifications

Eaton 283876

Catalog Number: 283876

XBST16. Busbar support, MB top, 125mm, 1600A, 3/4C

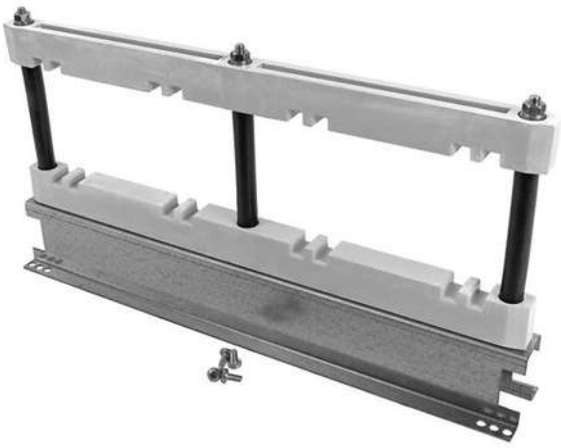

General specifications

Product Name	**Catalog Number**
Eaton xEnergy Main LV switchgear	283876
EAN	**Product Length/Depth**
4015082838768	480 mm
Product Height	**Product Width**
65 mm	190 mm
Product Weight	**Compliances**
2.8 kg	RoHS conform CE Marked

Powering Business Worldwide

Product specifications

Accessory/spare part type

Other

Resources

Brochures

eaton-xenergy-main-brochure-2021-br019030-en-us.pdf

Catalogs

eaton-xenergy-main-catalogue-kat_xenergy_143171_en-gb.pdf

Eaton Corporation plc
Eaton House
30 Pembroke Road
Dublin 4, Ireland
Eaton.com

© 2024 Eaton. All Rights Reserved.

Eaton is a registered trademark.

All other trademarks are property of their respective owners.

Eaton.com/socialmedia