Pressure regulator, Series MU1-RGS

R412010111

General series information
AVENTICS Series MU1 Air Preparation Units

- The AVENTICS Series MU1 components are ideal for applications in harsh environments. They offer large thread connections to guarantee a high compressed air flow rate and provide reliable filtration, regulation and lubrication.



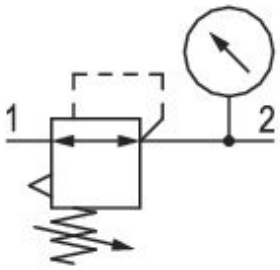

Technical data

Industry	Industrial
Function	Standard pressure regulator
Parts	Pressure regulator
Pressure gauge	with pressure gauge
Mounting orientation	Any
Regulator type	Diaphragm-type pressure regulator
Port	G 1/4
Nominal flow Qn	1000 l/min
Regulation range min.	0.5 bar
Regulation range max.	23 bar
Working pressure min.	0.5 bar
Working pressure max	35 bar

Min. ambient temperature	0 °C
Max. ambient temperature	60 °C
Activation	Mechanical
Regulator function	with relieving air exhaust
Certificates	Free of substances that impair surface wetting in the coating process
Pressure supply	single
Medium	Compressed air Neutral gases
Weight	0.63 kg

Material

Housing material	Steel, chrome-plated
Seal material	Nitrile rubber
Part No.	R412010111

Technical information

The pressure dew point must be at least 15 °C less than ambient and medium temperature and may not exceed 3 °C.

Nominal flow Qn with secondary pressure p2 = 6 bar at Δp = 1 bar

Mounting: panel installation or mounting bracket

Delivery incl. mounting bracket R412010110 and pressure gauge R412007898

p1 max = 35 bar, p2 max = 23 bar

Dimensions in mm

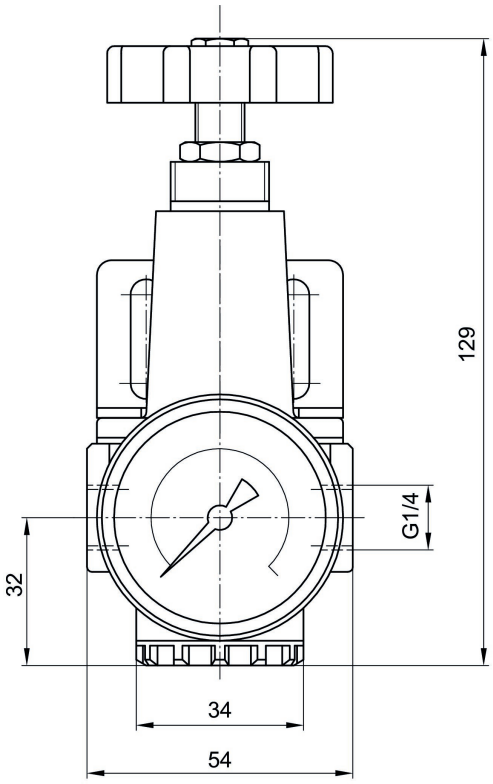

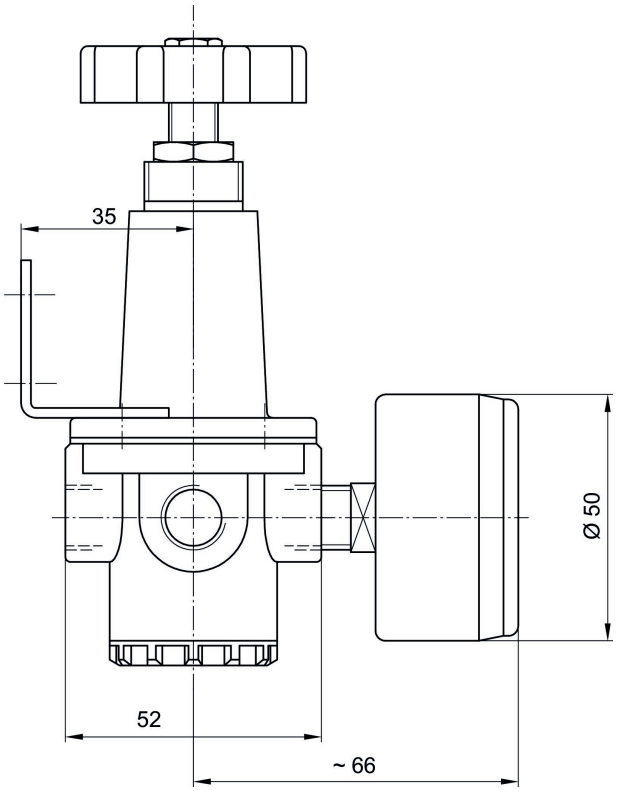

Pressure characteristics curve

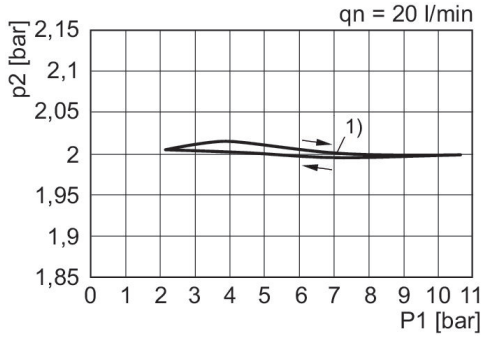

p1 = Working pressure
p2 = Secondary pressure
qn = Nominal flow
1) Starting point

Flow rate characteristic, p2 = 0,05 - 7 bar

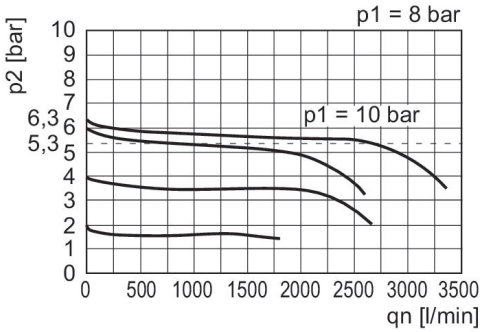

p1 = Working pressure
p2 = Secondary pressure
qn = Nominal flow