

Visual Signals - Industrial
LIGHT EMITTING DIODE **BEACONS**

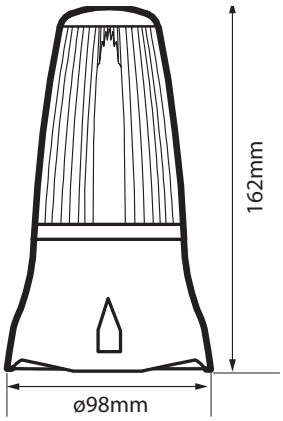

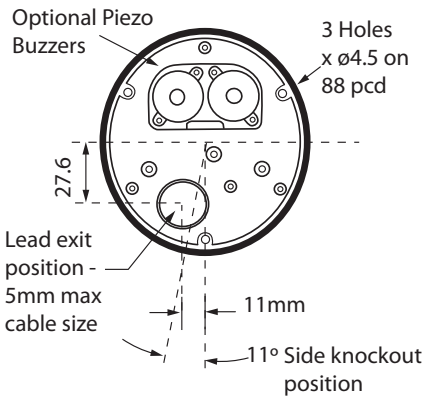

Industrial LED Multi Functional Beacons > LEDD & LEDA 125 Series

Product overview

The LEDD and LEDA125 Series are suitable for security, process control & industrial applications, where low maintenance and long life are the pre-requisite requirement.

These beacons offer a four stage alarm option, selectable via a 4 Way DIP switch on the PCB:

1. Standard Flash (60FPM)
2. Double Flash (130FPM)
3. Rapid Flash (190FPM)
4. Static Mode (No Flash)

An advantage of the Static mode is that it can be controlled via a remote source (ie. Control Panel / PLC etc) offering the potential of a remote flash option. The design allows for termination inside the enclosure via an M12 sealing grommet located in the base.

The LEDA version incorporates two piezo buzzers situated in the base of the unit that are synchronised to the light mode (the buzzers can be controlled separately of the light on the DC version only) offering a combined audible & visual warning device.

LEDD & LEDA 125 Series > Ordering Information

Code No:	Voltage:	Light Source:	Current:				
			01	02	03	04	05
LEDD125-02	24v DC ---	48 LEDs	170 mA	170 mA	170 mA	170 mA	170 mA
LEDD125-03	115v AC ~	48 LEDs	80 mA	80 mA	80 mA	80 mA	80 mA
LEDD125-04	230v AC ~	48 LEDs	40 mA	40 mA	40 mA	40 mA	40 mA
For Audible Option							
LEDA125-02	24v DC ---	48 LEDs	170 mA	170 mA	170 mA	170 mA	170 mA
LEDA125-03	115v AC ~	48 LEDs	80 mA	80 mA	80 mA	80 mA	80 mA
LEDA125-04	230v AC ~	48 LEDs	40 mA	40 mA	40 mA	40 mA	40 mA

ADD THE FOLLOWING LENS CODES TO THE PRODUCT WHEN ORDERING 01 02 03 04 05

Features

- Continuously rated
- LED long life and extra bright
- Suitable for surface or wall mounting
- Optional wall bracket & guard available - see accessories
- 3 point fix
- 360° light output around the vertical axis.
- Dustproof and Weatherproof

Material

UV Stable Polycarbonate Lens

UV Stable ABS Plastic Base

Kg 0.57 AC 0.33 DC | 50/60 Hz | °C -20+45 | IP 65 | FPM 60/130/190 | dB 90

INDUSTRIAL | FIRE

APPROVALS and CONFORMITIES

RoHS