PCIE-1802
PCIE-1802L

8-Ch, 24-Bit, 216 kS/s Dynamic Signal Acquisition PCI Express Card

4-Ch, 24-Bit, 216 kS/s Dynamic Signal Acquisition PCI Express Card



Features

- 8/4 simultaneously sampled analog inputs, up to 216 kS/s
- 24-bit resolution ADCs with 115 dB dynamic range
- Wide input range of ±0.2 ~ 10 V
- Built-in anti-aliasing filter
- Software-configurable 4/10 mA integrated electronic piezoelectric (IEPE) excitation currents
- Software-selectable AC/DC coupling
- Full automatic calibration
- Multiple card synchronization

Introduction

PCIE-1802/1802L is a 24-bit, high-accuracy data acquisition PCI Express module specifically designed for sound and vibration-related applications. This module features built-in 4/10 mA excitation currents for IEPE sensors, such as accelerometers and microphones.

Specifications

Analog Input

Channels	PCIE-1802: 8 PCIE-1802L: 4 (simultaneous sampling differential or 50 Ω pseudo-differential)
Resolution	24 bits (delta sigma)
Max. Sampling Rate	100 S/s to 216 kS/s (with resolution ≤ 363.80 μS/s)
Input Coupling	AC/DC, selectable per channel
AC Cut-Off Frequency	0.727 Hz (-3 dB)
Trigger Modes	Start, Delayed Start, Stop, Delayed Stop
Input Range	±0.2, ±0.5, ±1, ±2, ±5, ±10 V
Offset Error	< ±1 mV
Gain Error	< ±0.2 %
Total Harmonic Distortion (THD)	-100 dB
Total Harmonic Distortion Plus Noise (THD+N)	-98 dB
Dynamic Range	115 dB
IEPE Excitation	0, 4, or 10 mA, selectable per channel
Data Transfer	Direct memory access (DMA)
Multi-Card Support	For synchronizing more than 8 analog input channels

Digital Input/Output

DI Channels	1 (interrupt)
DO Channels	2

General

Bus Type	PCI Express x1
I/O Connectors	CN600 36-pin mini SCSI (for analog input) CN601 HDMI (for clock, trigger, and DI/Os)
Dimensions (L x H)	168 x 100 mm (6.6" x 3.9")
Operating Temperature	0 ~ 60 °C (32 ~ 140 °F)
Storage Temperature	-40 ~ 70 °C (-40 ~ 158 °F)
Storage Humidity	5 ~ 95 % RH, non-condensing

Ordering Information

PCIE-1802-AE	8-ch, 24-bit, 216 kS/s dynamic signal acquisition PCI Express card
PCIE-1802L-AE	4-ch, 24-bit, 216 kS/s dynamic signal acquisition PCI Express card
PCLD-8840-AE	20-pin DIN rail HDMI cable wiring board for PCIE-1802 and PCIE-1840
PCL-108BNC-50E	Mini SCSI to 8-BNC cable
PCL-104BNC-50E	Mini SCSI to 4-BNC cable
PCL-10119-1E	HDMI cable

*Power consumption PCIE-1802=11.5W , PCIE-1802L=7.5W
It may have thermal issue with fanless platform.
Please consult our techinal support if you want to plug it in fanless platform.

Pin Assignments

Mini SCSI

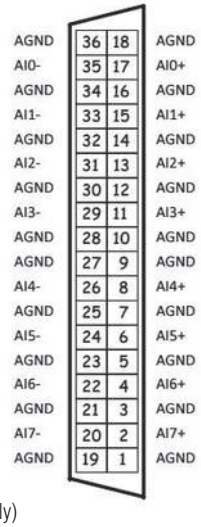

* AI4 to AI7 (PCIE-1802 only)

HDMI

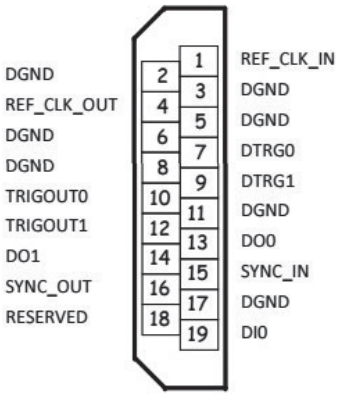

All product specifications are subject to change without notice.