**MSUD valve plug BI-11mm with cable**

PUR 3x0.75 bk UL/CSA 5m

Art.No.: 7000-11021-6260500
Weight: 0.29
Country of origin: CZ
Model designation: MSUDS-IB1Z-626_5.0

MSUD
Form BI (11 mm)
24 V AC ±20% / DC ±25%
LED and suppression
Further cable lengths on request.
Plastic housings with good resistance against chemicals and oils.
The resistance to aggressive media should be individually tested for your application. Further details on request.

## Link to Product

**Illustration**



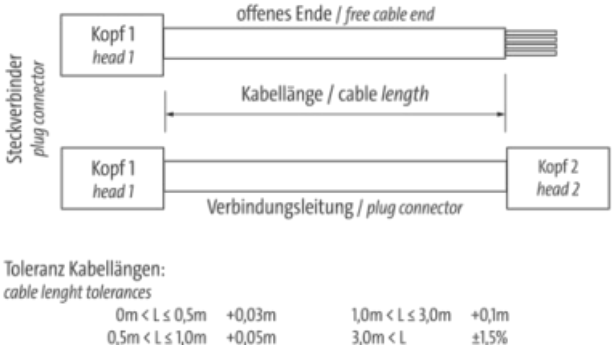


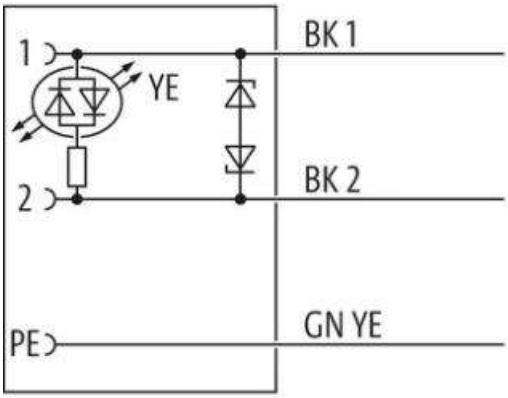


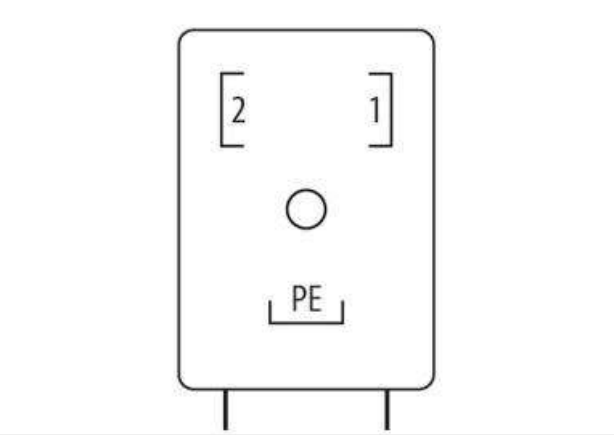


The information in this Product-PDF has been compiled with the utmost care.
Liability for the correctness completeness and topicality of the information is restricted to gross negligence. Version: 2025-02-16

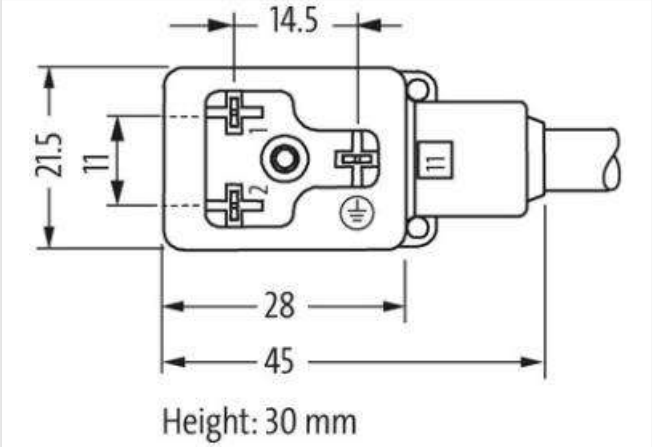


Product may differ from Image

| | |
|---|---|
| Cable length | 5 m |
| **Side 1** | |
| Tightening torque | 0,4 Nm |
| Mounting method | inserted, screwed |
| Family construction form | MSUD BI |
| Thread | M3 |
| Material | PBT |
| Degree of protection (EN IEC 60529) | IP67 |
| **Commercial data** | |
| ECLASS-6.0 | 27279218 |
| ECLASS-7.0 | 27279218 |
| ECLASS-8.0 | 27279218 |
| ECLASS-9.0 | 27060311 |
| ECLASS-10.1 | 27060312 |
| ECLASS-11.1 | 27060312 |
| ECLASS-12.0 | 27060312 |
| ETIM-5.0 | EC001855 |
| customs tariff number | 85444290 |
| GTIN | 4048879221429 |
| Packaging unit | 1 |
| **Electrical data** | |
| Drop-out delay time max. | 20 ms |
| **Electrical data \| Supply** | |
| Operating voltage AC | 24 V |
| Operating voltage AC min. | 19,2 V |
| Operating voltage AC max. | 28,8 V |
| Operating voltage DC | 24 V |
| Operating voltage DC min. | 18 V |
| Operating voltage DC max. | 30 V |
| Cut-off peak voltage max. | 55 V |
| Current operating per contact max. | 4 A |
| Current consumption max. | 15 mA |

The information in this Product-PDF has been compiled with the utmost care.
Liability for the correctness completeness and topicality of the information is restricted to gross negligence. Version: 2025-02-16

MURR ELEKTRONIK
stay connected

| | |
|---|---|
| **Diagnostics** | |
| Status indication LED | yellow |
| **Installation \| Connection** | |
| Mounting set | M3 |
| **Device protection \| Electrical** | |
| Additional condition protection degree | inserted, screwed |
| Pollution Degree | 3 |
| Rated surge voltage | 0,8 kV |
| Material group (IEC 60664-1) | I |
| Additional suppressor | Diode, Z-Diode |
| **Mechanical data \| Material data** | |
| Coating locking | galvanized |
| Coating of fitting | galvanized |
| Color housing | black |
| Material gasket | PUR |
| Locking material | Steel |
| Material screw connection | Steel |
| **Mechanical data \| Mounting data** | |
| Mounting method | inserted, screwed |
| **Environmental characteristics \| Climatic** | |
| Operating temperature min. | -25 °C |
| Operating temperature max. | 85 °C |
| Additional condition temperature range | depending on cable quality |
| **Important installation notes** | |
| Note on strain relief | Protect the connectors by suitable measures from mechanical loads, e.g. by the usage of cable ties. |
| Note on bending radius | **Attention:** Observe the permissible bending radii when laying cables, as the IP protection class can be endangered by excessive bending forces. |
| **Installation \| Cable** | |
| wire arrangement | black 1, black 2, green-yellow |
| Cable identification | 626 |
| Cable Type | 2 |
| Printing color of wire insulation | white (isolation black) |
| Jacket Color | black |
| Type of Certificate | cURus |
| Amount stranding | 1 |
| Stranding | 3 wires twisted |
| wire arrangement | black 1, black 2, green-yellow |
| Cable weigth | 55,33 g/m |
| Material jacket | PUR |
| Shore hardness jacket | 85 ± 5 Shore A |
| Freedom from ingredients (jacket) | lead-free, cadmium-free, CFC-free, silicone-free |
| Outer-diameter (jacket) | 5,9 mm |
| Tolerance outer diameter (sheath) | ± 5 % |
| Material inner jacket | PVC |
| Color (inner jacket) | black |
| Material wire insulation | PVC |
| Amount wires | 3 |
| Outer diameter insulation | 1,8 mm |
| Outer diameter tolerance core insulation | ± 5 % |
| Shore hardness wire insulation | 43 ± 5 Shore D |
| Material properties wire insulation | good machinability |
| Ingredient freeness wire insulation | lead-free, cadmium-free, CFC-free, silicone-free |

The information in this Product-PDF has been compiled with the utmost care.
Liability for the correctness completeness and topicality of the information is restricted to gross negligence. Version: 2025-02-16

| | |
|---|---|
| Printing color of wire insulation | white (isolation black) |
| Amount strands (wire) | 42 |
| Diameter of single wires | 0,15 mm |
| Conductor crosssection (wire) | 0,75 mm² |
| Material conductor wire | Stranded copper wire, bare |
| Conductor type (wire) | strand class 6 |
| Nominal voltage AC max. | 300 V |
| Current load capacity (standard) | to DIN VDE 0298-4 |
| Current load capacity min. wire | 12 A |
| Electrical resistance line constant wire | 26 Ω/km @ 20 °C |
| AC withstand voltage (wire - wire) | 2 kV @ 60 s |
| Power frequency withstand voltage (wire - jacket) | 2 kV @ 60 s |
| Min. operating temperature (static) | -30 °C |
| Max. operating temperature (fixed) | 80 °C |
| Operating temperature min. (dynamic) | -5 °C |
| Operating temperature max. (dynamic) | 80 °C |
| UV resistance | DIN EN ISO 4892-2 A |
| Flame resistance | UL 1581 § 1090 \| IEC 60332-2-2 \| UL 1581 § 1100 FT2 |
| chemical resistance | Good, application-related testing |
| Gasoline resistance | Good, application-related testing |
| Oil resistance | Good, application-related testing \| DIN EN 60811-404 |
| Bending radius (fixed) | 10 x Outer diameter |
| Bending radius (dynamic) | 15 x Outer diameter |
| No. of bending cycles (C-track) | 2 Mio. @ 25 °C |
| Traversing distance (C-track) | 5 m @ 25 °C |
| Travel speed (C-track) | 3,3 m/s @ 25 °C |

The information in this Product-PDF has been compiled with the utmost care.
Liability for the correctness completeness and topicality of the information is restricted to gross negligence. Version: 2025-02-16