CAHB-10

Linear actuator



Benefits

- Compact design
- Designed for harsh environment
- Robust and reliable
- Integrated limit switches
- Quiet operation
- Thermal protection
- Optional potentiometer and 2-Hall encoder available
- Electromagnetic compatibility (EMC) compliant

Technical data

Designation	Unit	CAHB–10... 1	CAHB–10... 2	CAHB–10... 3	CAHB–10... 4	CAHB–10... 5	CAHB–10... 6
Push load	N	120	240	500	750	1 000	1 500
Pull load	N	120	240	500	750	1 000	1 500
Speed (full load to no load)	mm/s	45 to 56	24 to 30	13 to 16	8 to 10	6 to 8	5 to 8
Stroke	mm	50 to 300	50 to 300	50 to 300	50 to 300	50 to 300	50 to 300
Retracted length	mm	–[1)]	–[1)]	–[1)]	–[1)]	–[1)]	–[1)]
Voltage	V DC	12 or 24	12 or 24	12 or 24	12 or 24	12 or 24	12 or 24
Power consumption	W	N/A	N/A	N/A	N/A	N/A	N/A
Current consumption 12 V DC	A	4	3,5	3,2	3	2,8	4,4
24V DC	A	2,2	2	1,8	1,8	1,6	2,8
Duty cycle	%	25	25	25	25	25	20
Ambient temperature	°C	–40 to +85	–40 to +85	–40 to +85	–40 to +85	–40 to +85	–40 to +85
Type of protection	IP	66s/69k	66s/69k	66s/69k	66s/69k	66s/69k	66s/69k
Weight (at 300 mm stroke)	kg	1,5	1,5	1,5	1,5	1,5	1,5
Color	–	Silver	Silver	Silver	Silver	Silver	Silver
Limit switches	–	Yes	Yes	Yes	Yes	Yes	Yes
Thermal protection	–	Yes	Yes	Yes	Yes	Yes	Yes

[1)] For basic configuration see dimensional drawing ↳ **page 5**
For potentiometer configuration see dimensional drawing ↳ **page 7**

Dimensional drawing

Basic configuration and optional 2-Hall encoder

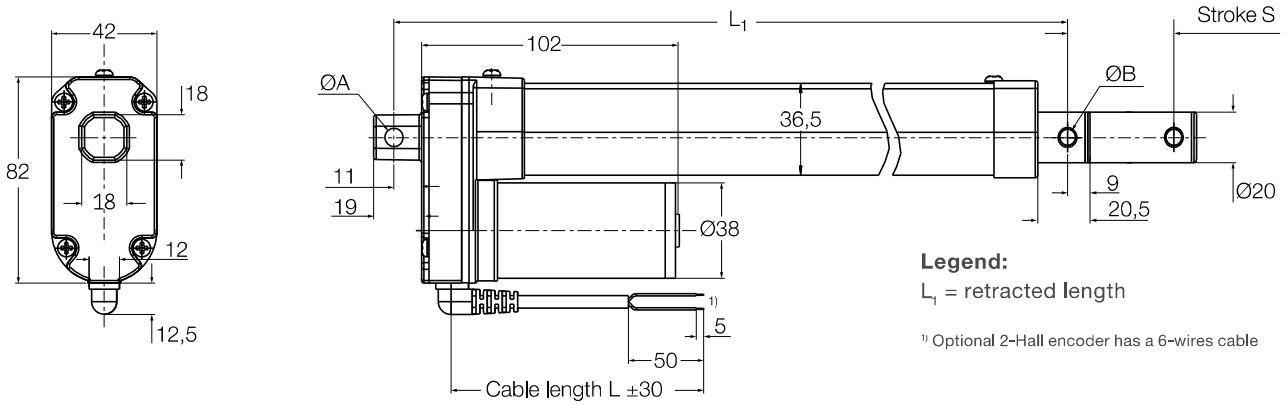

Legend:
L_1 = retracted length

1) Optional 2-Hall encoder has a 6-wires cable

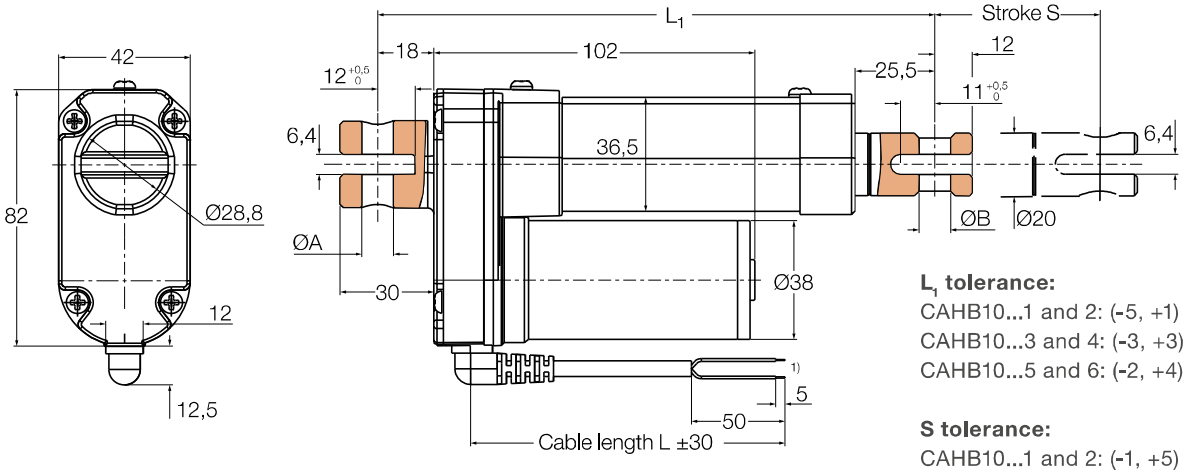

L_1 tolerance:
CAHB10...1 and 2: (-5, +1)
CAHB10...3 and 4: (-3, +3)
CAHB10...5 and 6: (-2, +4)

S tolerance:
CAHB10...1 and 2: (-1, +5)
CAHB10...3 and 4: (-3, +3)
CAHB10...5 and 6: (-4, +2)

Stroke [mm]	50	100	150	200	250	300
Retracted length (L_1)	158	209	260	311	362	413
Retracted length with fork head	179	230	281	332	383	434

Performance diagrams

Speed-load diagram

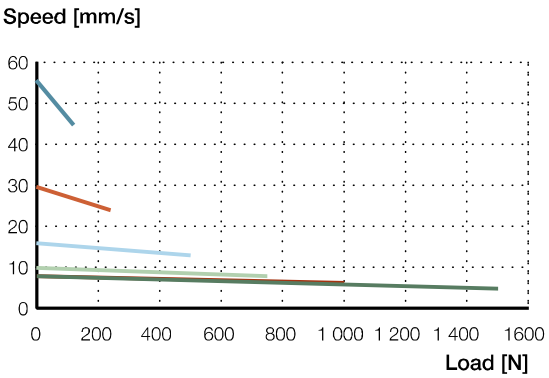

Current-load diagram

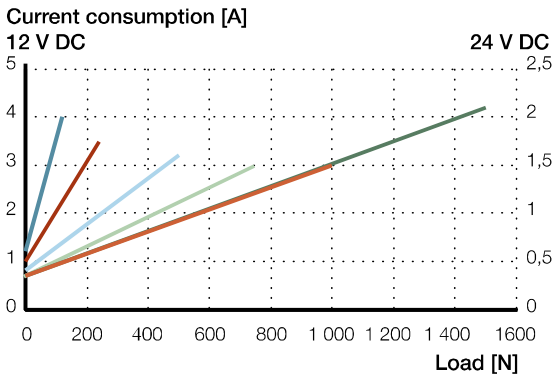

CAHB-10...1
CAHB-10...2
CAHB-10...3
CAHB-10...4
CAHB-10...5
CAHB-10...6

Dimensional drawing

Optional potentiometer

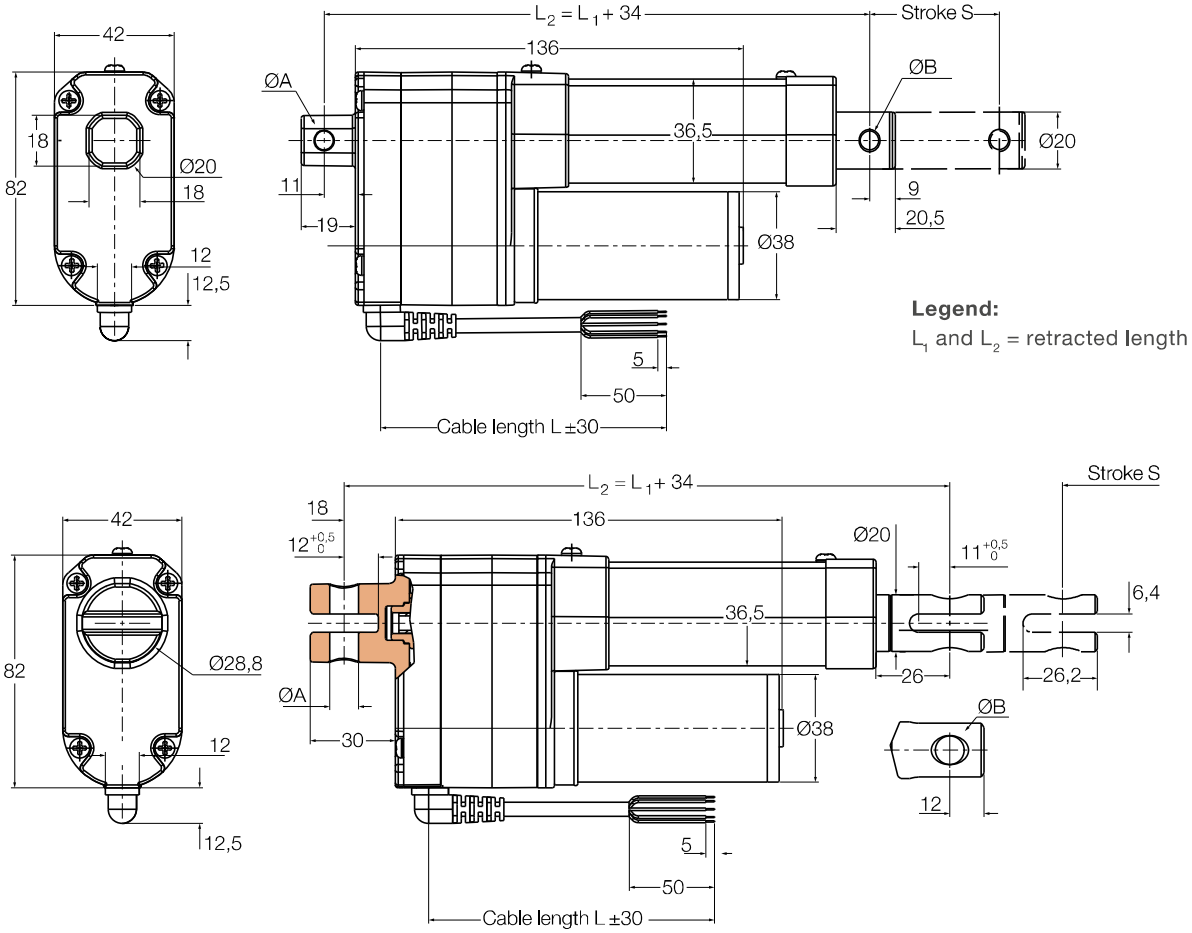

L_2 tolerance:
CAHB10...1 and 2: (-5, +1)
CAHB10...3 and 4: (-3, +3)
CAHB10...5 and 6: (-2, +4)

S tolerance:
CAHB10...1 and 2: (-1, +5)
CAHB10...3 and 4: (-3, +3)
CAHB10...5 and 6: (-4, +2)

Stroke (mm)	50	100	150	200	250	300
Retracted length (L_2)	192	243	294	345	396	447
Retracted length with fork head	213	264	315	366	417	468

Attachment

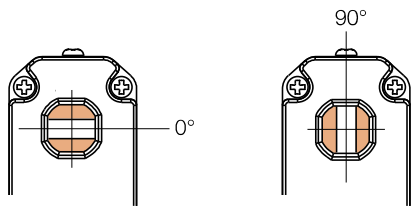

Encoder resolution

Type	CAHB-10...1	CAHB-10...2	CAHB-10...3	v CAHB-10...4	CAHB-10...5/6
Mm/pulse	0,3	0,15	0,075	0,05	0,038

Potentiometer resolution

Stroke [mm]	50~80	80~160	160~300
Minimum resistence value of potentiometer	700~1 300 Ω	700~1 300 Ω	700~1 300 Ω
Potentiometer resolution	100 Ω/mm	50 Ω/mm	16,6 Ω/mm

Absolute analog output

Stroke [mm]	50~80	80~160	160~300
Initial value VS RL position (V)	0,5	0,5	0,5
Resolution (mm)	0,024	0,049	0,0146
Position feedback change (V/mm)	0,05	0,025	0,0083

Connecting diagram

Basic configuration
12/24 V DC

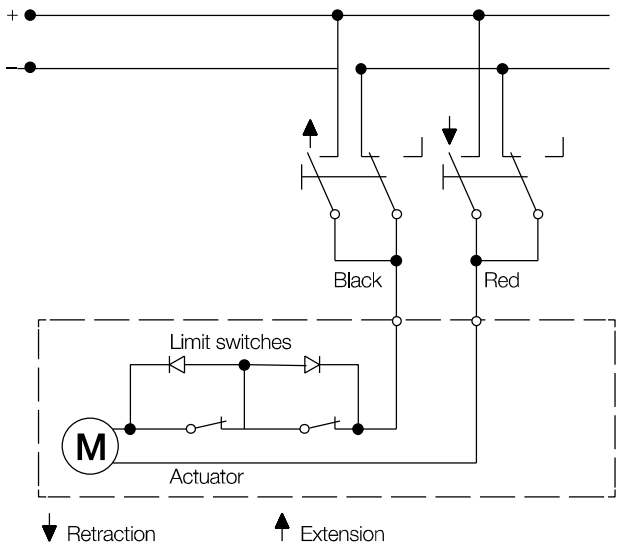

2-Hall encoder
12/24 V DC

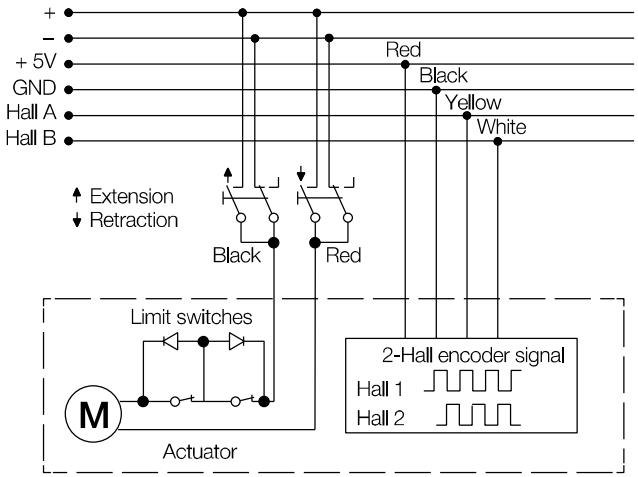

Potentiometer

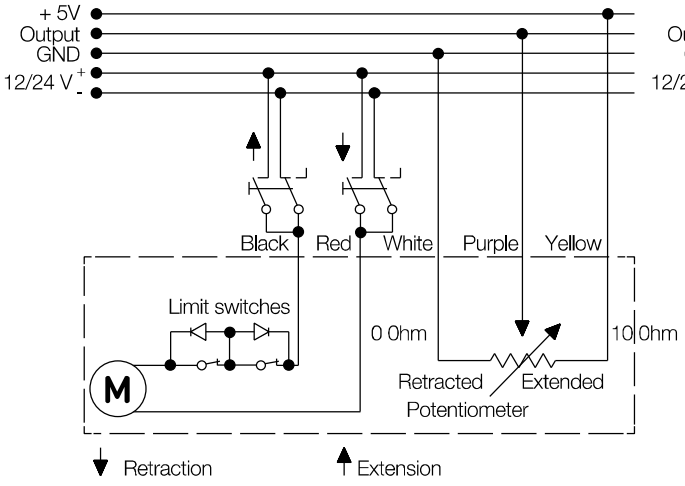

Absolute analog output

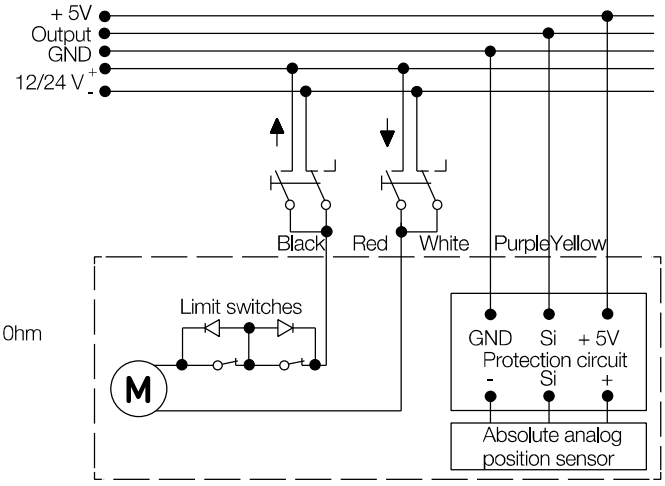

Ordering key

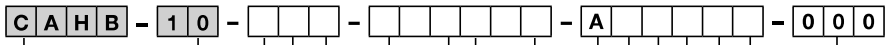

Type

Voltage

12 V DC	A
24 V DC	B

Load

120 N	1
240 N	2
500 N	3
750 N	4
1 000 N	5
1 500 N	6

Screw

TR12 screw	A
Customized	X

Stroke

50 mm	050
100 mm	100
150 mm	150
200 mm	200
250 mm	250
300 mm	300

Retracted length[1]

Stroke without potentiometer:[2]	A(B)+A(B)	A(B)+C	C+A(B)	C+C
50 mm	158	165	172	179
100 mm	209	216	223	230
150 mm	260	267	274	281
200 mm	311	318	325	332
250 mm	362	369	376	383
300 mm	413	420	427	434

IP

Standard (IP 66s/69k)	A

Front attachment

Rod with hole Ø 6,4 mm	A
Rod with hole Ø 8 mm	B
Fork head with hole Ø 10,1 mm	C
Customized	X

Rear attachment

Rod with hole Ø 6,4 mm	A
Rod with hole Ø 8 mm	B
Fork head with hole Ø 10,1 mm	C
Customized	X

Hole direction of the attachments

0°	A
90°	B

Option 1: Position Poutput

None	O
Absolute analog position	A
Potentiometer	P
2-Hall encoder	H

Cable lenght

600 mm without connector	A
1 000 mm without connector	B
1 500 mm without connector	C
2 000 mm without connector	D
2 500 mm without connector	E
3 000 mm without connector	F
Customized	X

[1] Retracted lenght will be englared 34 mm with Potentiometer option
[2] Front attachment + Rear attachment; A, B, C mean the attachment types