# DG85 series
## automotive / industrial relays



- General purpose automotive or industrial relays
- High inrush capabilities
- PCB Mounting option
- Ideal for DC Motor Control
- High continuous DC current capacity
- Industry standard size and footprint
- DG85F optimised for 24VDC switching
- RoHS Compliant

### Contacts

| | | | | | | |
|---|---|---|---|---|---|---|
| Contact number & arrangement | | SPST-NO (1 Form A); SPDT (1 Form C) | | | | |
| Contact material | | AgNi0.15; AgNi90/10; AgSnOInO; AgCdO | | | | |
| Max. switching voltage | DC | 30VDC (current dependent - see Figs 5 & 6 ); DG85F 24VDC | | | | |
| | | DG85A | DG85B | DG85C | DG85D | DG85F |
| Max. continuous current | SPST-NO | 40A | 60A | 80A | 100A | 60A |
| | SPDT (NO/NC) | 40A/30A | 60A/40A | 80A/60A | - | 60A/40A |
| Max. switching current - make | SPST-NO | 120A | 120A | 240A | 240A | 120A |
| | SPDT (NO/NC) | 120A/45A | 120A/45A | 240/180A | - | 120A/45A |
| Max. switching current - break | SPST-NO | 40A | 60A | 80A | 100A | 60A |
| | SPDT (NO/NC) | 40A/30A | 60A/40A | 80A/60A | - | 60A/40A |
| Min. switching current | | 0.1A 12VDC | 0.5A 12VDC | 0.5A 12VDC | 0.5A 12VDC | 0.5A 24VDC |
| Contact gap | | >0.5mm | >0.5mm | >0.5mm | ≤1.0mm | >1.0mm |
| Initial contact resistance | | <100mΩ, max. at 0.1A/6VDC | | | | |

### Coil

| | | |
|---|---|---|
| Rated voltage | DC | 6...24V |
| Must release voltage | | ≥0.1Un |
| Operating range of supply voltage | | See coil table 1 |
| Rated power consumption | DC | 1.6W; 1.81W with resistor; DG85F, 2.3W |

### Insulation

| | | |
|---|---|---|
| Insulation resistance | | 100MΩ at 500VDC, 50%RH |
| Dielectric strength | | |
| | coil to contact | 500Vrms, 1min |
| | contact to contact | 500Vrms, 1min |

### General Data

| | | |
|---|---|---|
| Operating time (typical) | mS | ≤ 7mS |
| Release time (typical) | mS | ≤ 2 mS |
| Electrical Life | ops | 1 x $10^5$, 5 x $10^4$ (DG85F only) (see Note 2) |
| Mechanical life | ops | 1 x $10^7$, 5 x $10^5$ (DG85F only) |
| Dimensions | L x W x H | various - see dimensional drawings |
| Weight | | 40g approx. depending on style and mounting |
| Ambient temperature | storage | -40 to 155°C |
| | operating | -40 to 125°C |
| Shock resistance | | Functional: 20g 11mS; Destructive: 100g |
| Vibration resistance | | DA 1.27mm 10-40Hz / 40-70Hz:5g / DA 0.5mm 100-500Hz: 10g |

# DG85 series
## automotive / industrial relays

DURAKOOL

Coil Data — Table 1

| Model | Coil voltage code | Nominal voltage (VDC) | Coil resistance (Ω) ±10% | Must operate voltage Max. (VDC) | Allowable voltage (VDC)* | Must release voltage min. (VDC) |
|---|---|---|---|---|---|---|
| DG85A<br>DG85B<br>DG85C<br>DG85D | 1006 | 6 | 22 | 3.6 | 10.1 | 0.6 |
| | 1012 | 12 | 90 | 7.2 | 20.5 | 1.2 |
| | 1024 | 24 | 330 | 14.4 | 39.1 | 2.4 |
| DG85F | 1006 | 6 | 15.6 | 3.6 | 6.4 | 0.6 |
| | 1012 | 12 | 62.5 | 7.2 | 14.8 | 1.2 |
| | 1024 | 24 | 250 | 14.4 | 28.8 | 2.4 |

* At ambient temperature of 85˚C, maximum allowable voltage should be reduced by 28%

Ordering codes

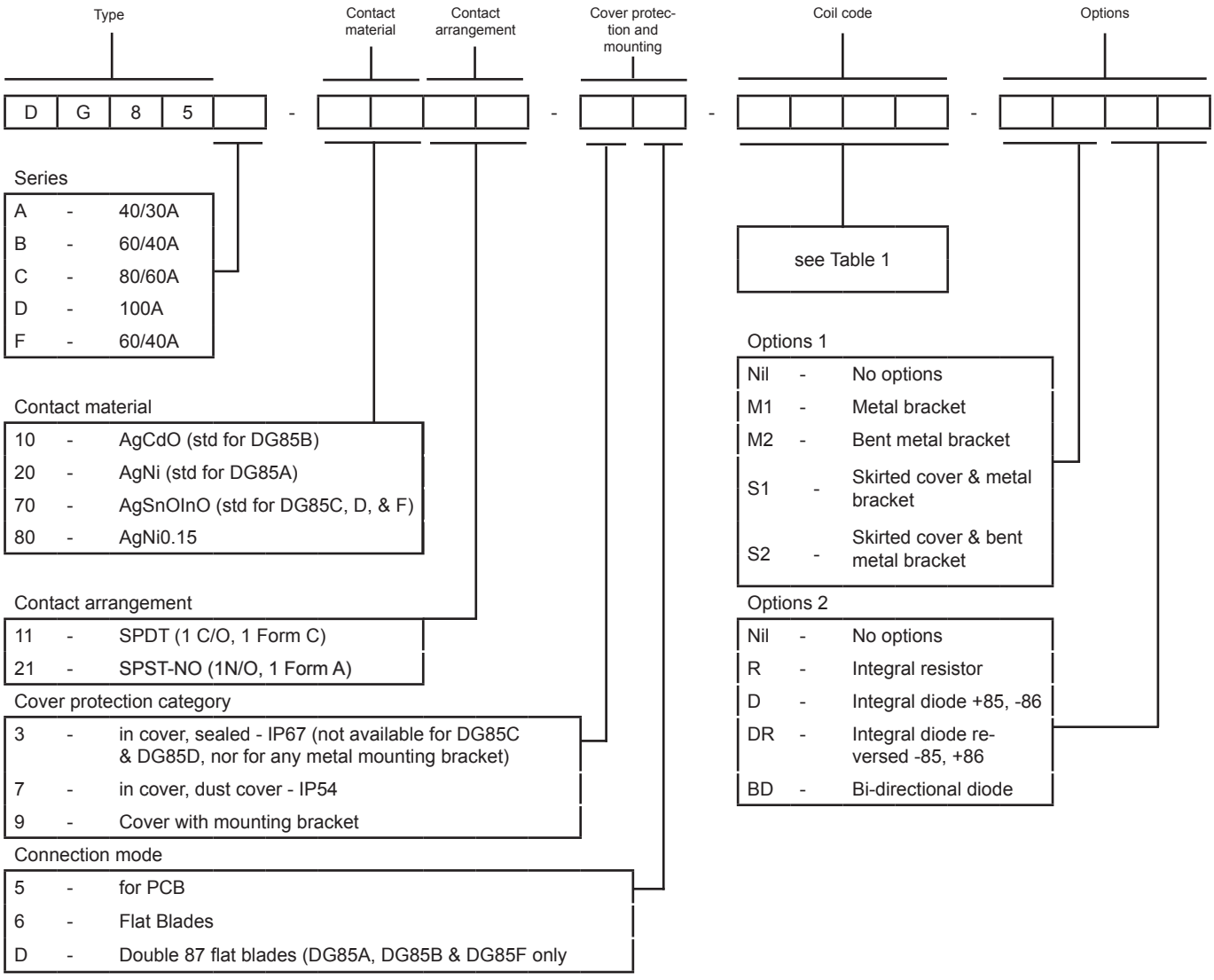




DURAKOOL

Overall Dimensions - Plug-in Types — Fig. 1

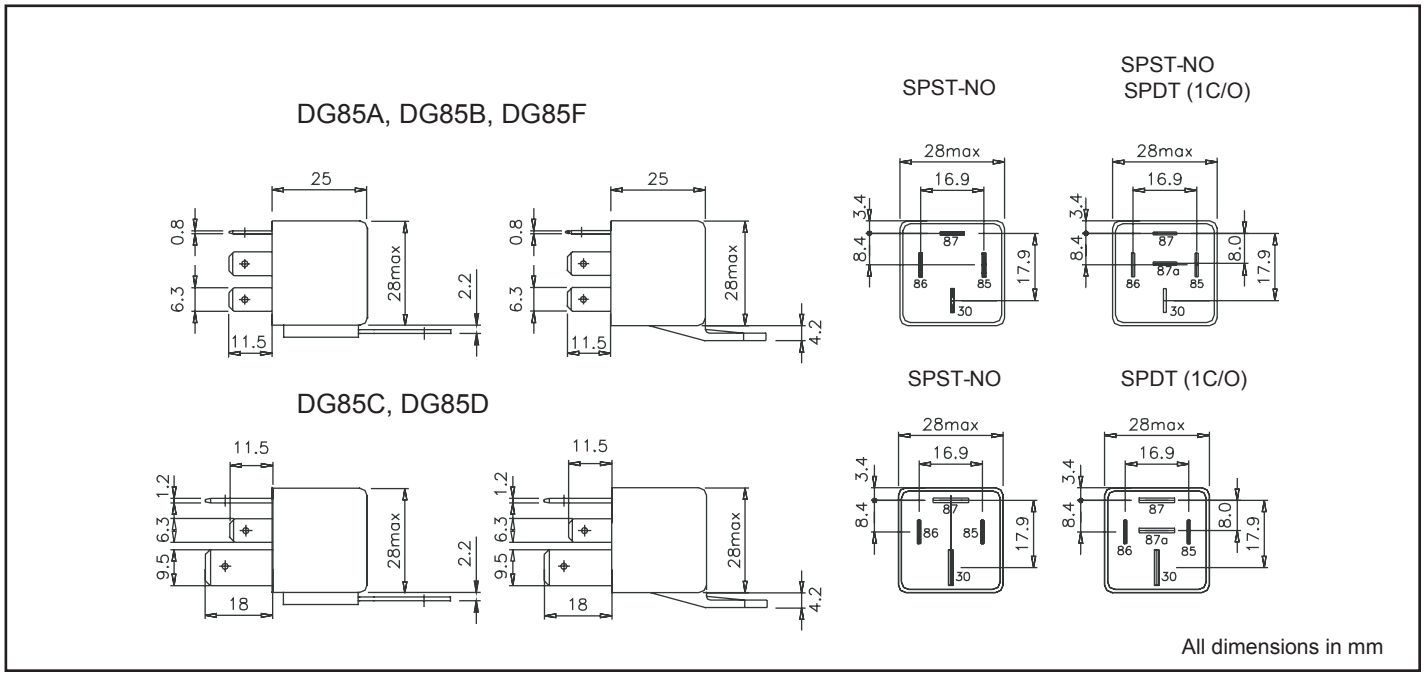


Overall Dimensions - PCB Types — Fig. 2

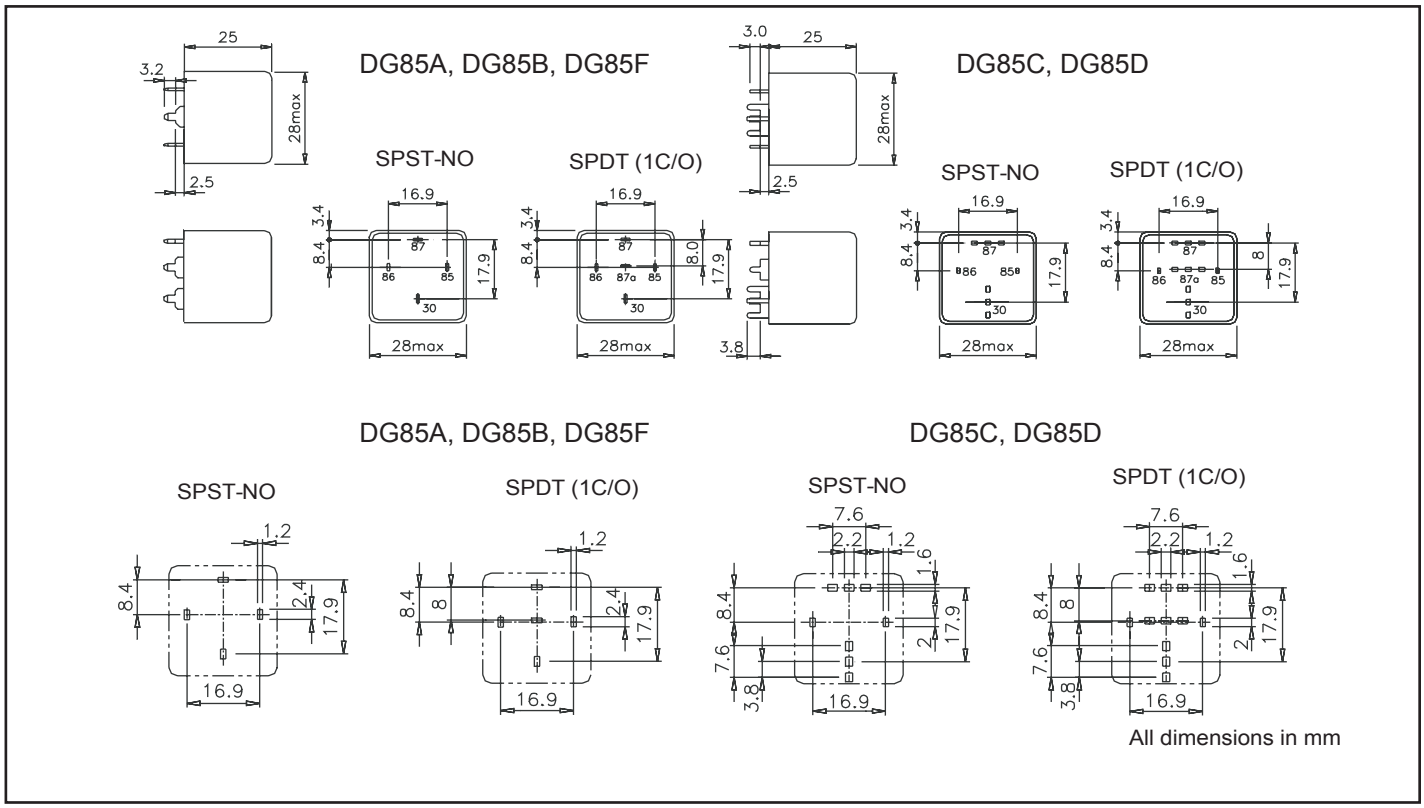




American Electronic Components Inc., 1101 Lafayette St. Elkhart, IN46516
www.aecsensors.com Sales Department Tel: (888) 847-6552

Overall Dimensions - Plug-in types with optional brackets & skirts — Fig. 3

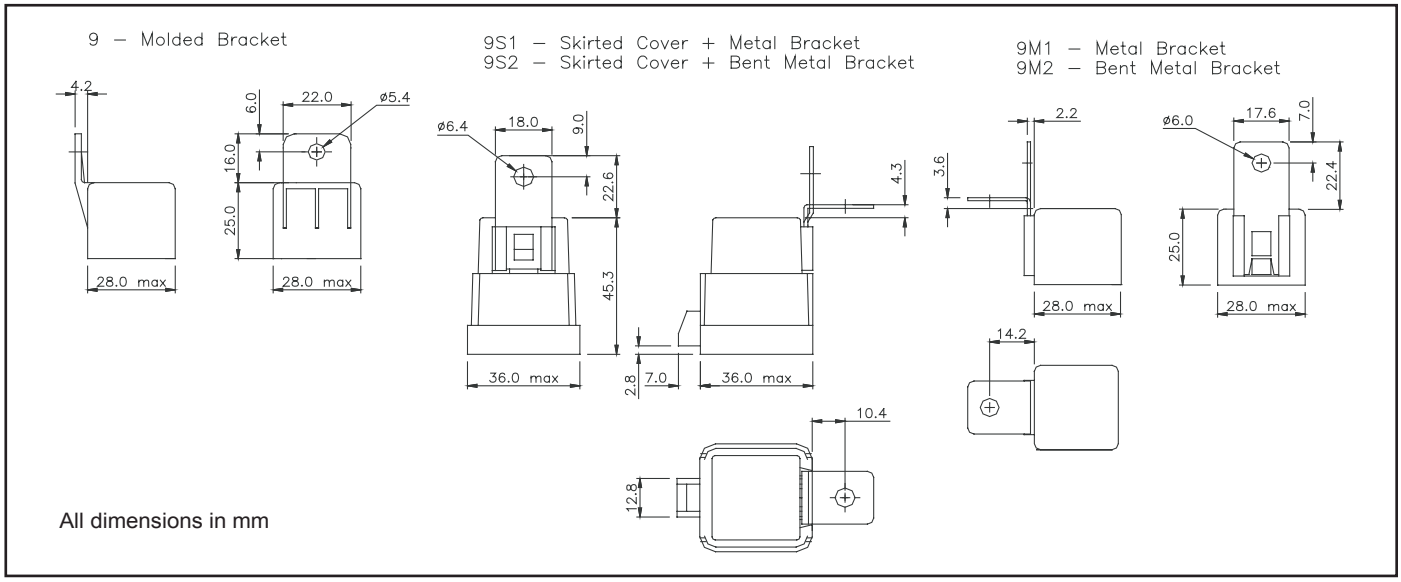


Wiring Diagrams — Fig. 4

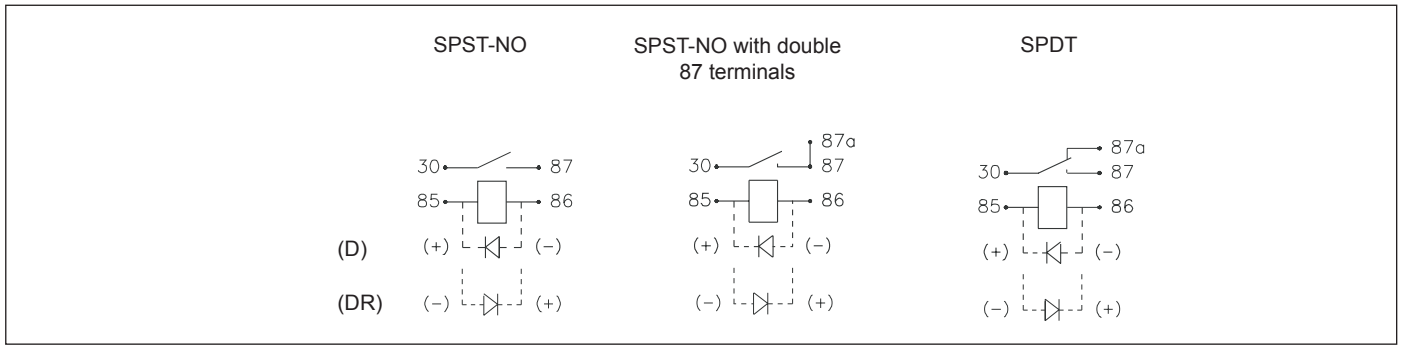


Max. DC resistive load breaking capacity — Fig. 5

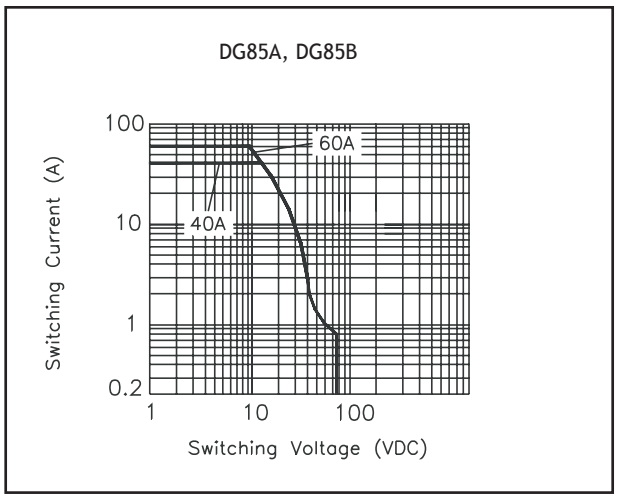


Max. DC resistive load breaking capacity — Fig. 6

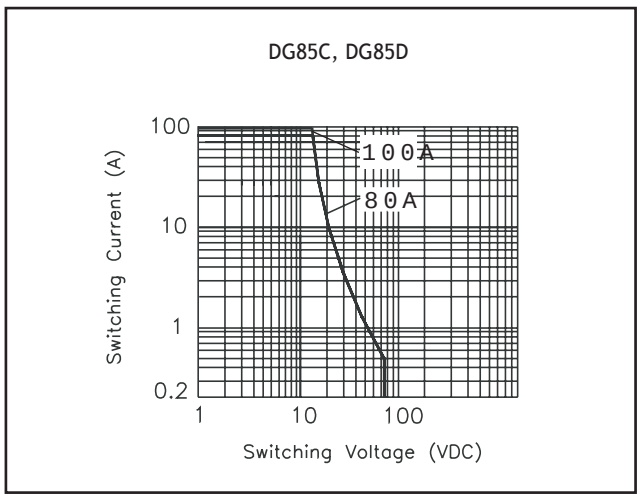


Notes:
1: All parameters, unless otherwise specified, are measured at ambient temperature of 23°C.
2: Electrical life obtained at resistive or inductive load at 40A, 15VDC with suitable arc suppression circuit attached and with operating frequency of 1 op/sec.
3: Maximum make current refers to lamp load inrush current.

Specifications are liable to change without notice. E&OE.