
SM1X30...

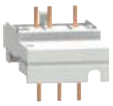
SM1X31...
SM1X32...


SM1Z17 01P


SM1Z17 02P


SM1Z17 05P


SM1Z17 15R


SM1Z17 25R

new


SM1X17 40P


SM1X17 45P


SM1X17 46P


SM1X17 024R

new

Order code	Characteristics	Qty per pkg	Wt
		n°	[kg]
Rigid SM1 breaker-contactor connections.			
SM1X30 40P	For motor protection breaker SM1P... with BG... mini-contactors	10	0.019
SM1X31 41P	For motor protection breaker SM1P... with BF09..25A contactors	10	0.035
SM1X32 41P	For motor protection breaker SM1P... with BF26..38A contactors (max 32A)	10	0.045
SM1X30 40R	For motor protection breaker SM1R... with BG... mini-contactors	10	0.019
SM1X31 41R	For motor protection breaker SM1R... with BF09..25A contactors	10	0.035
SM1X31 42R	For motor protection breaker SM1R... with contactors BF09..25D and BF09...25L	10	0.044
SM1X32 41R	For motor protection breaker SM1R... with contactors BF26..38A (max 32A)	10	0.045
Surface mount enclosures IP65 (4X) for SM1P...			
SM1Z17 01P	Width 80mm/3.15"❶	1	0.235
SM1Z17 02P	Width 80mm/3.15". With button for emergency stop	1	0.275
SM1Z17 11P	Width 100mm/3.94"❶	1	0.315
SM1Z17 12P	Width 100mm/3.94". With button for emergency stop	1	0.345
Flush mount enclosure IP65 (4X) for SM1P...			
SM1Z17 05P	Width 87mm/3.42"❶	1	0.205
Surface mount enclosures IP65 (4X) for SM1R...			
SM1Z17 15R	With rotary actuator red/yellow. Width 100mm/3.94"	1	0.350
SM1Z17 10R	With black rotary actuator Width 100mm/3.94"	1	0.350
Flush mount enclosures IP65 for SM1R (UL type 4X)			
SM1Z17 25R	With rotary actuator yellow/red Width 87mm/3.42"	1	0.245
SM1Z17 20R	With rotary actuator black Width 87mm/3.42"	1	0.245
ENCLOSURE ACCESSORIES AND SPARE PARTS. For SM1Z...P enclosures.			
SM1X17 40P	Emergency stop button. IP65 (4X)	1	0.044
SM1X17 45P	Rubber membrane with rim. IP65 (4X)	1	0.016
SM1X17 46P	Lockable block. IP65 (4X)	1	0.030
LED pilot lights IP65.			
SM1X17 024G	Green 24VAC/DC	1	0.007
SM1X17 024R	Red 24VAC/DC	1	0.007
SM1X17 400G	Green 110...400VAC	1	0.007
SM1X17 400R	Red 110...400VAC	1	0.007
Plastic M25 to ½" NPT entry adapter.			
11 LM M25 PG16	For enclosures SM1Z17 01P and SM1Z17 02P	10	0.009
Starter assembly adapter plates.			
11 SMX90 10	Adapter plate for direct starter comprising breaker SM1... and contactor BG..., BF09A...BF38A	1	0.058
11 SMX90 12	Adapter plate for reversing switch comprising breaker for motor protection SM1... contactors BG..., BF09A...BF38A	1	0.095
11 SMX90 14	Adapter plate for starter star-delta comprising motor protection breaker SM1... and contactors BF09A...BF38A	1	0.118
11 SMX90 18	35mm rail for passage of wires underneath to contactor; for SMX90 14	1	0.025
11 SMX90 19	DIN rail extension 35mm/1.38"	1	0.025


11 SMX90 10


11 SMX90 12

General and operational characteristics
RIGID SM1 BREAKER-CONTACTOR CONNECTIONS
The SM1X3... connections electrically and mechanically fasten the motor protection breaker together with the contactor. This forms a highly compact single-unit starter for quick installation on a single 35mm DIN rail.
The SM1X3... connections can also be mounted in combination with reversing switches and star-delta starters made with the rigid connections indicated in section 2.

SURFACE MOUNT ENCLOSURES
- Top or bottom cable entry:
  - SM1Z17 01P and SM1Z17 02P 4 M25-threaded knock-outs
  - SM1Z17 11P and SM1Z17 12P 4 knock-out with Ø20.5mm/0.81" or Ø26.5mm/1.04"
  - SM1Z17 10R e SM1Z17 15R 4 - knock-out with Ø20.5mm/0.81" or Ø26.5mm/1.04"
- Possibility of rear entry too
- Protection rating: IP65 (UL Type 4X)
- Holds a breaker, one front-mount auxiliary contact block either one shunt or undervoltage release and one pilot light; only for SM1Z17 10R and SM1Z17 15R, 2 side-mount auxiliary contact blocks can be fitted as well
- The SM1Z17 10R and SM1Z17 15R rotary actuators can be padlocked with a maximum of 3 padlocks Ø4...8mm/0.16...0.31"
- Earth/ground terminal included
- Operating temperature: -25...+60°C
- Storage temperature: -50...+80°C.

FLUSH MOUNT ENCLOSURES FOR SM1P AND SM1R
- Holds a SM1P breaker, one front-mount auxiliary contact block and either one shunt or undervoltage release
- Protection rating: IP65 (UL Type 4X)
- Earth/ground terminal included
- 70x115mm/2.76x4.53" cutout for SM1P
  70x143mm/2.77x5.65" cutout for SM1R
- Operating temperature: -25...+60°C
- Storage temperature: -50...+80°C.

ENCLOSURE ACCESSORIES
Emergency stop button:
- Turn to release
- Red button Ø35mm/1.38".

Lockable block:
- Prevents closing operation; 3 padlocks maximum Ø4...8mm/0.16...0.31".

STARTER ASSEMBLY ADAPTER PLATES
These accessories permit the assembly of starters, making slim and compact equipment that's easy and quick to install.
The starter adapter plates install on DIN rail 35mm/1.38".

Certifications and compliance
Certifications obtained: cULus except SM1X17 024..., SM1X17 400..., SMX90.... and 11 LM M25 PG16), EAC.
Certifications pending: CCC for rigid connections and enclosures (maximum current enclosures for cULus: 25A).
Compliant with standards: IEC/EN 60947-1, IEC/EN 60947-5-1, UL 60947-4-1, CSA C22.2 n° 60947-1, CSA C22.2 n° 60947-4-1.
For cURus pilot lights, please contact Technical support (Tel. 035 4282422; E-mail: service@LovatoElectric.com).

❶ Complete with rubber membrane.

Combinations

Rigid SM1P... breaker - contactor connections.

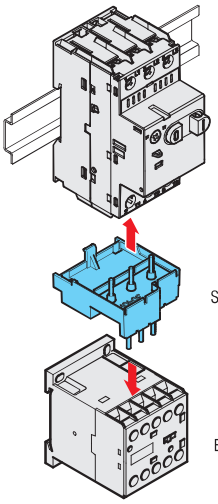

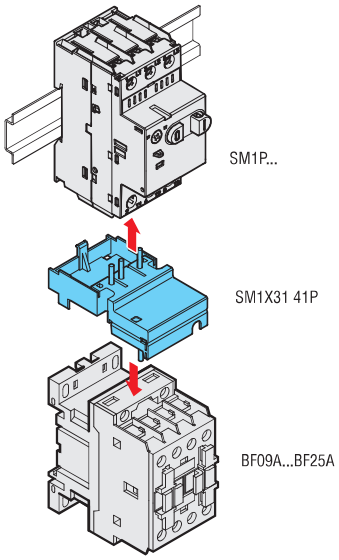

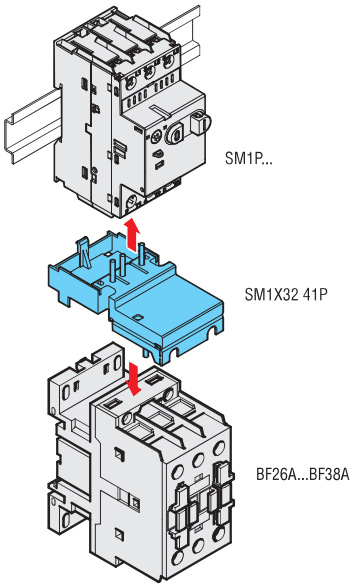

Rigid SM1R... breaker - contactor connections.

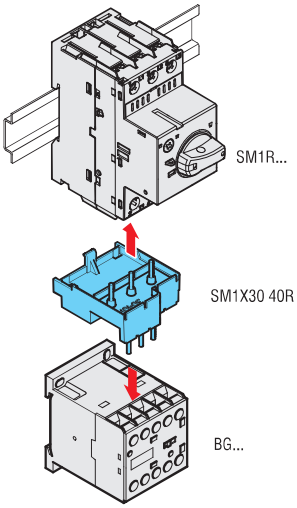

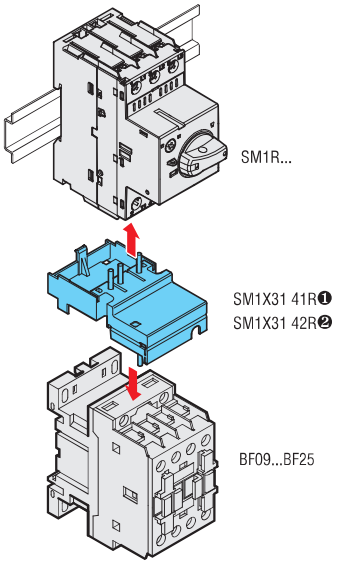

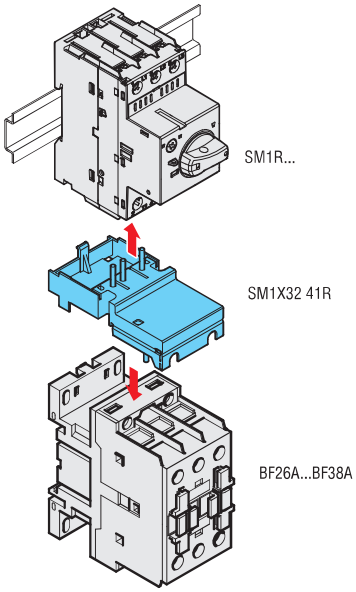

❶ For BF09A...BF25A contactors.
❷ For BF09D...BF25D and BF09L...BF25L contactors.

Padlockable door coupling handle.

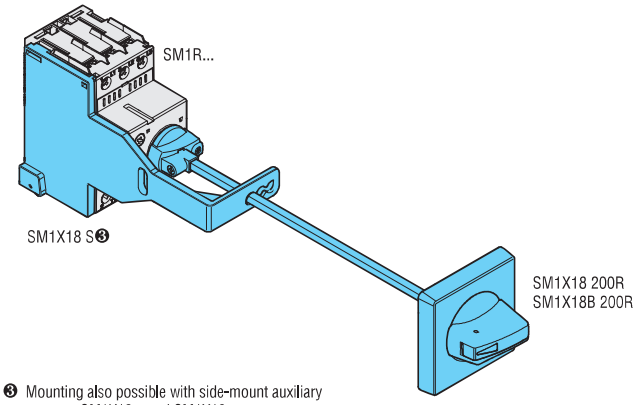

❸ Mounting also possible with side-mount auxiliary contacts SM1X12... and SM1X13...

Combinations

Surface mount enclosures for SM1P... Width 80mm.

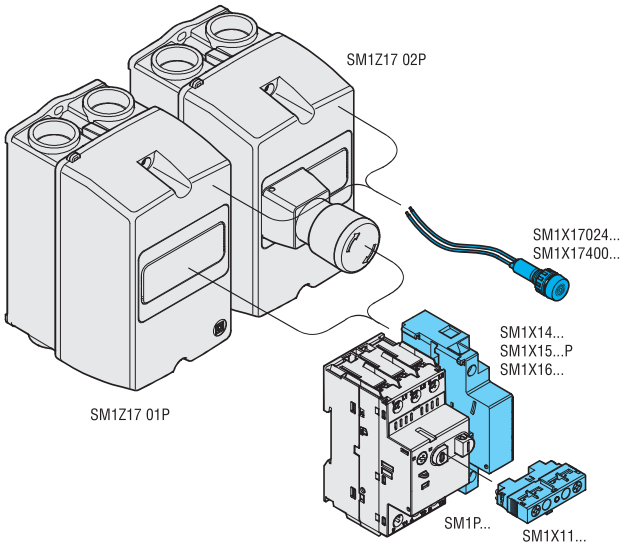

Surface mount enclosures for SM1P... Width 100mm.

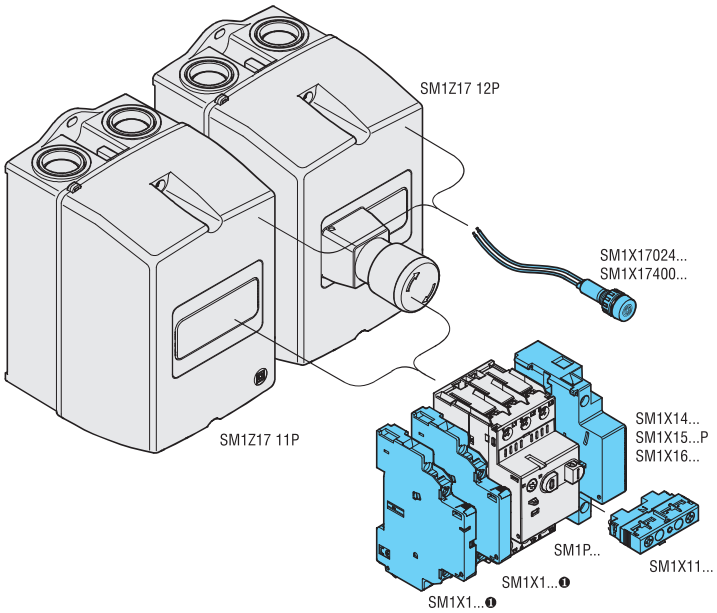

❶ Contacts for magnetic tripping indication SM1X13 11M when mounted in SM1Z17 11P and SM1Z17 12P, can't be mounted alone, but shall be mounted in combination with SM1X12... on SM1X 1311.

Flush mount enclosures for SM1P... Width 87mm/3.42".

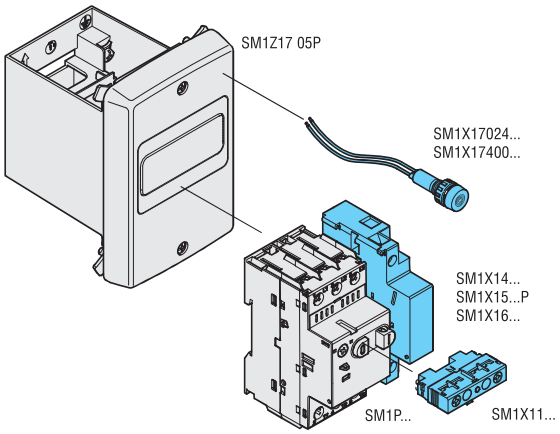

Surface mount enclosures for SM1R... Width 100mm/3.94".

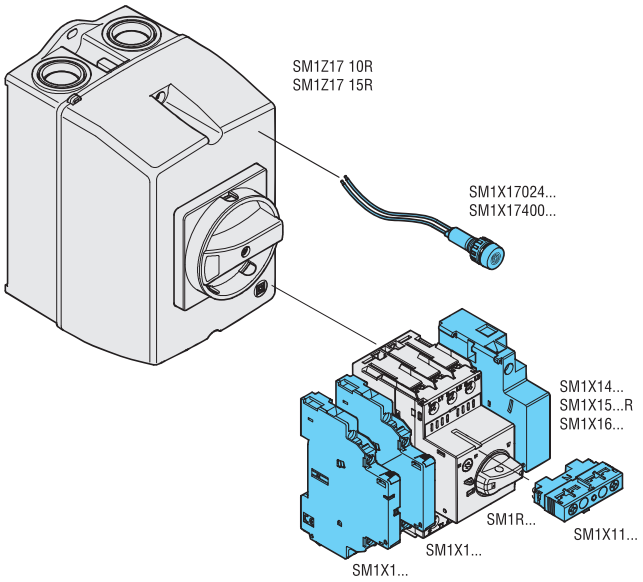

Flush mount enclosures for SM1R... width 87mm/3.42".

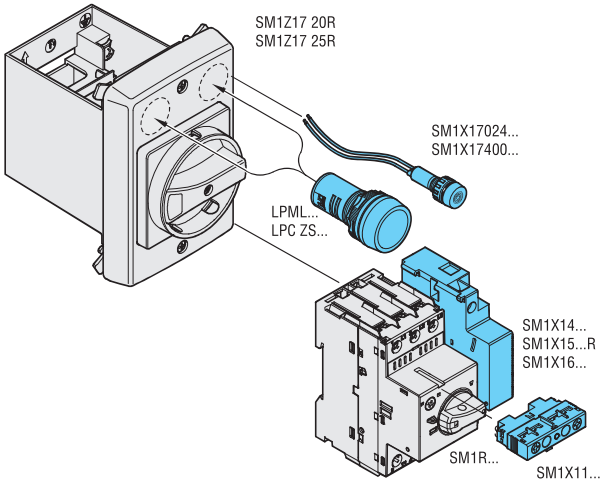

These elements mounted with **SM1... breakers** without side-mount auxiliary contacts

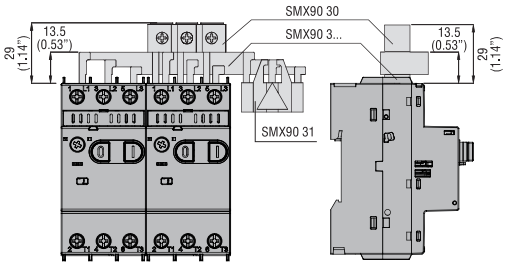

These elements mounted with **SM1... breakers** with side-mount auxiliary contacts **SMX12...** or **SMX13 11**

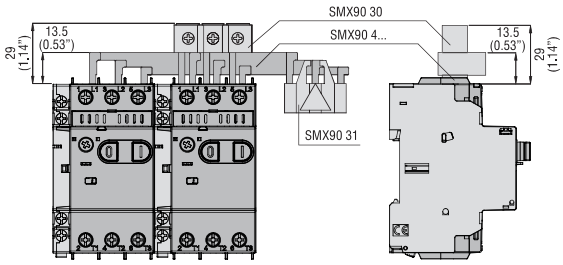

SM1X90 03R

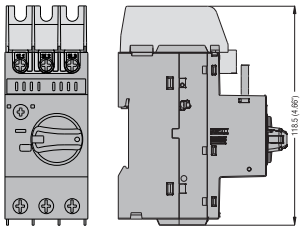

SMX90 32 - SMX90 33 - SMX90 34 - SMX90 35
Connection busbars – 45mm/1.77" spacing

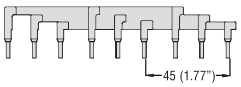

SMX90 42 - SMX90 43 - SMX90 44 - SMX90 45
Connection busbars – 54mm/2.13" spacing

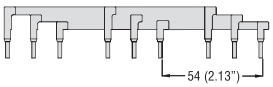

Enclosures **SM1Z17 01P**

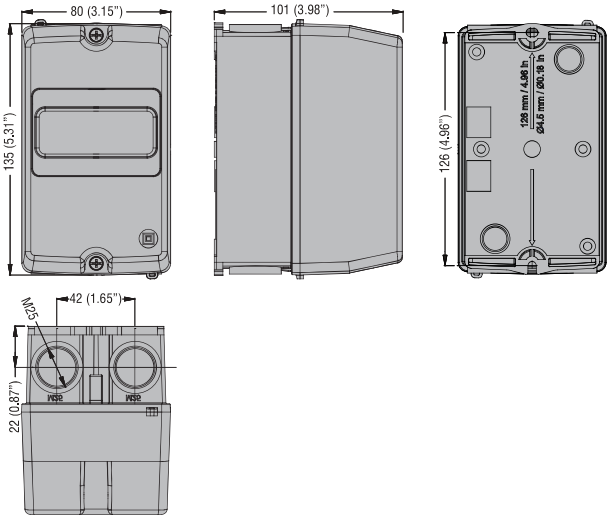

Enclosures **SM1Z17 02P**

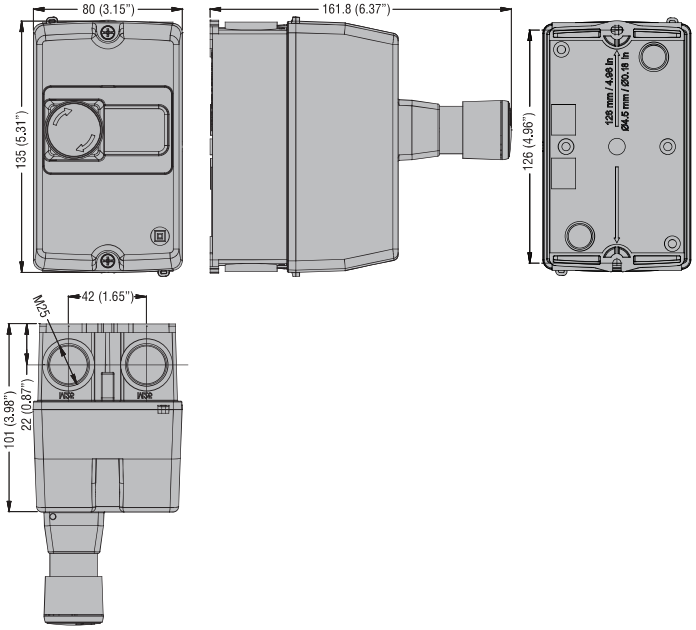

Enclosures **SM1Z17 11P**

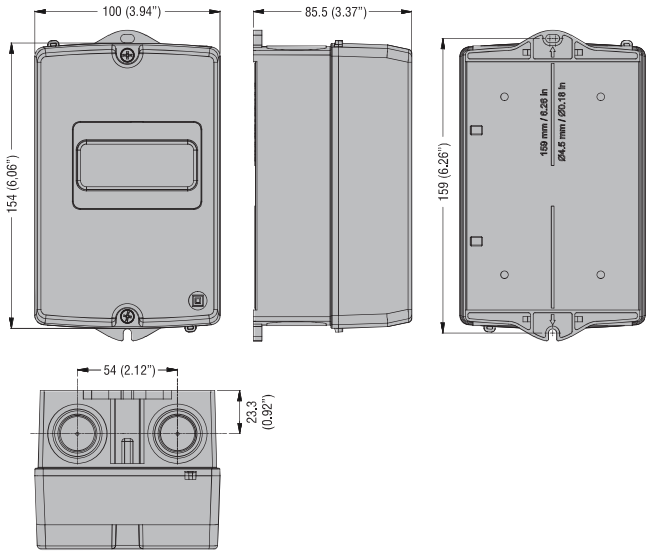

Enclosures **SM1Z17 12P**

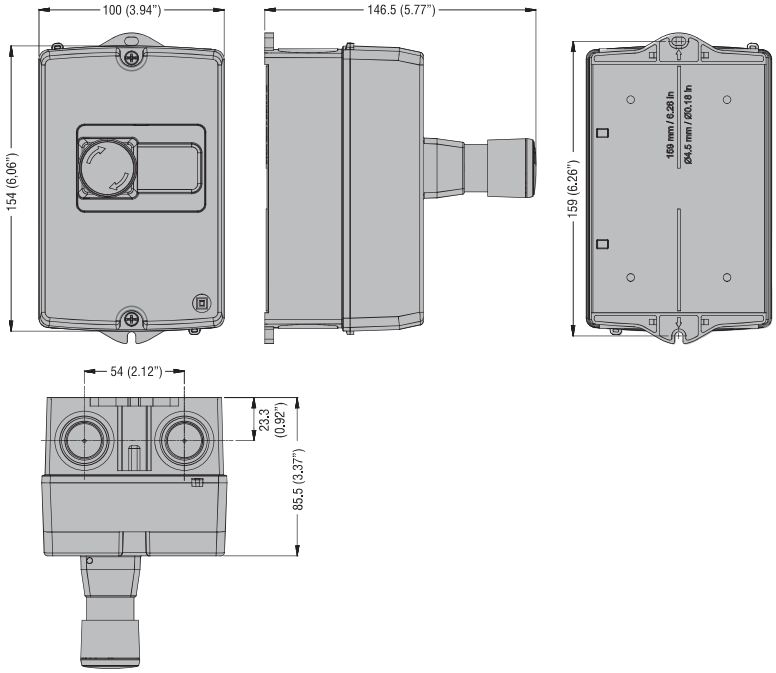

Enclosures **SM1Z17 05P**

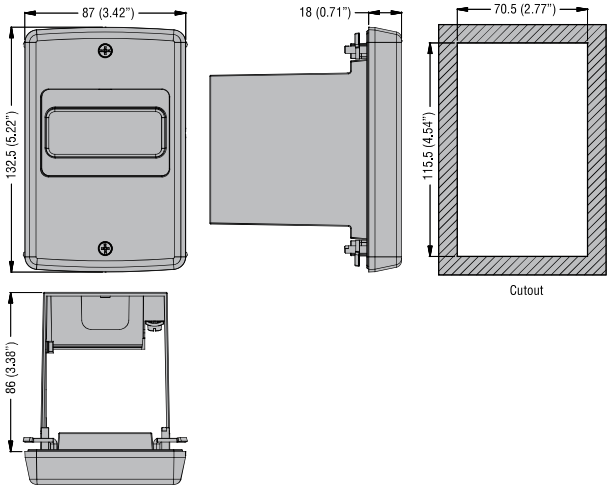

Enclosures **SM1Z17 15R** and **SM1Z17 10R**

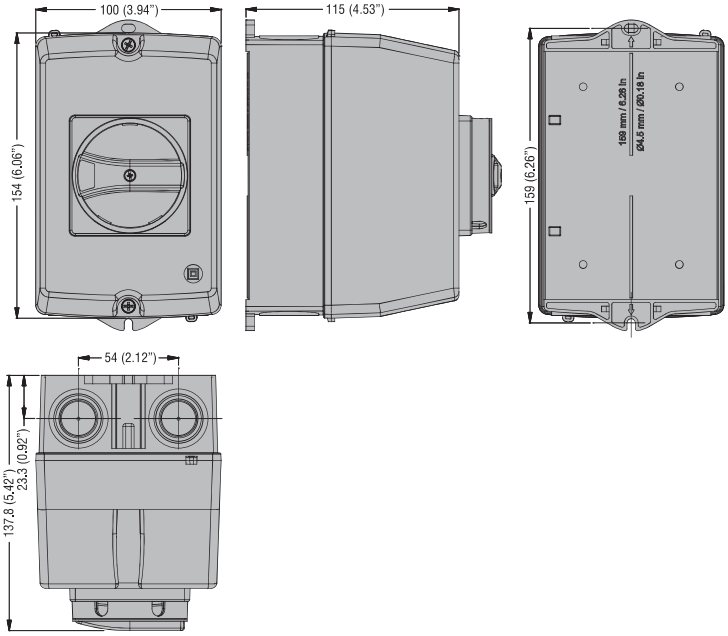

Enclosures **SM1Z17 20R** and **SM1Z17 25R**

