

Main switchSurface mounting

Part no.	**P1-25/I2/SVB**
Article no.	**207293**
Catalog No.	**SP1-025-I2CRQ**

Delivery programme

Product range			Switch-disconnectors
Basic function			Main switches Maintenance switches Manual override switches
Part group reference			P1
Design			Surface mounting
			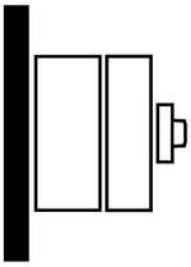
Protection type			IP65
			totally insulated
Emergency stop			As an emergency switching off/emergency stop device
			With red rotary handle and yellow locking ring
Standards			According to IEC/EN 60204-1, VDE 0113 Part 1
Locking facility			Lockable in the 0 (Off) position
			without auxiliary contacts
Contact sequence			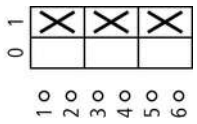
Front plate no.			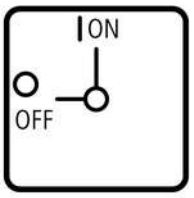 FS 908
Main conducting paths			
No. of poles		M	3
Auxiliary contacts			
		N/O	0
		B	0
Max. motor rating			
AC-23A			
400/415 V 50-60 Hz	P	kW	13
Rated uninterrupted current	I_u	A	25

Approvals

Product Standards	UL 508; CSA-C22.2 No. 14-05; CSA-C22.2 No. 94; IEC/EN 60947-3; CE marking
UL File No.	E36332
UL Category Control No.	NLRV
CSA File No.	12528
CSA Class No.	3211-05
North America Certification	UL listed, CSA certified
Suitable for	Branch circuits, suitable as motor disconnect
Degree of Protection	IEC: IP65; UL/CSA Type 3R, 12

General

Standards			IEC/EN 60947, VDE 0660, IEC/EN 60204, CSA, UL switch disconnector according to IEC/EN 60947-3
Lifespan, mechanical	Operations	x 10^6	0.3
Maximum operating frequency		Operations/h	30
Climatic proofing			Damp heat, constant, to IEC 60068-2-78; Damp heat, cyclical, to IEC 60068-2-30
Ambient temperature		°C	
Open		°C	- 25 - 50
Enclosed		°C	- 25 - 40
Mounting position			As required
Mechanical shock resistance to IEC 60068-2-27	Half-sinusoidal shock 20 ms	g	> 15

Contacts

Rated operational voltage	U_e	V AC	690
Rated impulse withstand voltage	U_{imp}	V AC	6000
Overvoltage category/pollution degree			III/3
Rated uninterrupted current	I_u	A	
open	I_u	A	25
Enclosed	I_u	A	25
Load rating with intermittent operation, class 12			
AB 25 % DF		x I_e	2
AB 40 % DF		x I_e	1.6
AB 60 % DF		x I_e	1.3
Short-circuit rating			
Fuse		A gG/gL	25
Rated short-time withstand current (1 s current)	I_{cw}	A_{rms}	640
Switching angles		°	90
Current heat loss per contact at I_e		W	1.1

Terminal capacities

Solid or stranded		mm^2	1 x (1.5 - 6) 2 x (1.5 - 6)
Flexible with ferrules to DIN 46228		mm^2	
Flexible with ferrule		mm^2	1 x (1 - 4) 2 x (1 - 4)
Terminal screw			M4
Tightening torque		Nm	1.6

Switching capacity

AC		x U_s	
Rated making capacity cos φ = 0.35		A	240
Rated breaking capacity, motor load switch cos φ = 0.35		A	
230 V		A	190
400 V		A	150
500 V		A	170
690 V		A	150

Rated operational current 440 V load-break switch AC-21A	I_e	A	25
Rating, AC-3 motor load switch	P	kW	
220 V 230 V	P	kW	5.5
380 V 400 V	P	kW	7.5
500 V	P	kW	7.5
660 V 690 V	P	kW	7.5
AC-23A Motor load switches (main switches maintenance switches)	P	kW	
230 V	P	kW	7
400 V	P	kW	13
500 V	P	kW	11
690 V	P	kW	11
DC		x U_s	
DC-1, Load-break switches L/R = 1 ms			
Rated operational current	I_e	A	25
Voltage per contact pair in series		V	60
DC-23A, motor load switch L/R = 15 ms			
24 V			
Rated operational current	I_e	A	25
Contacts		Quantity	1
48 V			
Rated operational current	I_e	A	25
Contacts		Quantity	2
60 V			
Rated operational current	I_e	A	25
Contacts		Quantity	3
120 V			
Rated operational current	I_e	A	12
Contacts		Quantity	3

Auxiliary contacts

Standards			According to IEC/EN 60204-1, VDE 0113 Part 1

Notes

Notes Main switch characteristics to IEC/EN 60204; positive opening of contacts, operator element positively located on shaft
The rated uninterrupted current I_u is stated at max. connected cross-section.
For terminal capacity solid, stranded and flexible:
Max. 2 cross-section sizes difference admissible when using 2 conductors.

Technical data ETIM 4.0

Version as switch disconnector compact			Yes
Version as main switch			Yes
Version as maintenance-/service switch			Yes
Version as safety switch			No
Version as emergency stop installation			Yes
Max. rated operation voltage Ue AC		V	690
Rated permanent current Iu		A	25
Rated operation power AC-3, 400 V		kW	7,5
Rated operation power at AC-23, 400V		kW	13
Conditioned rated short-circuit current Iq		kA	0
Number of poles			3
Number of auxiliary contacts as normally closed contact			0
Number of auxiliary contacts as normally open contact			0
Number of auxiliary contacts as change-over contact			0
Motor drive optional			No
Motor drive integrated			No
Voltage release optional			No
Device construction			Complete device in housing
Suitable for ground mounting			Yes

Suitable for front mounting			No
Suitable for front mounting center			No
Suitable for distribution board installation			No
Suitable for intermediate mounting			No
Type of control element			-
Interlockable			Yes
Connection type main current circuit			Screw connection
Degree of protection (IP), front side			IP65

Characteristics

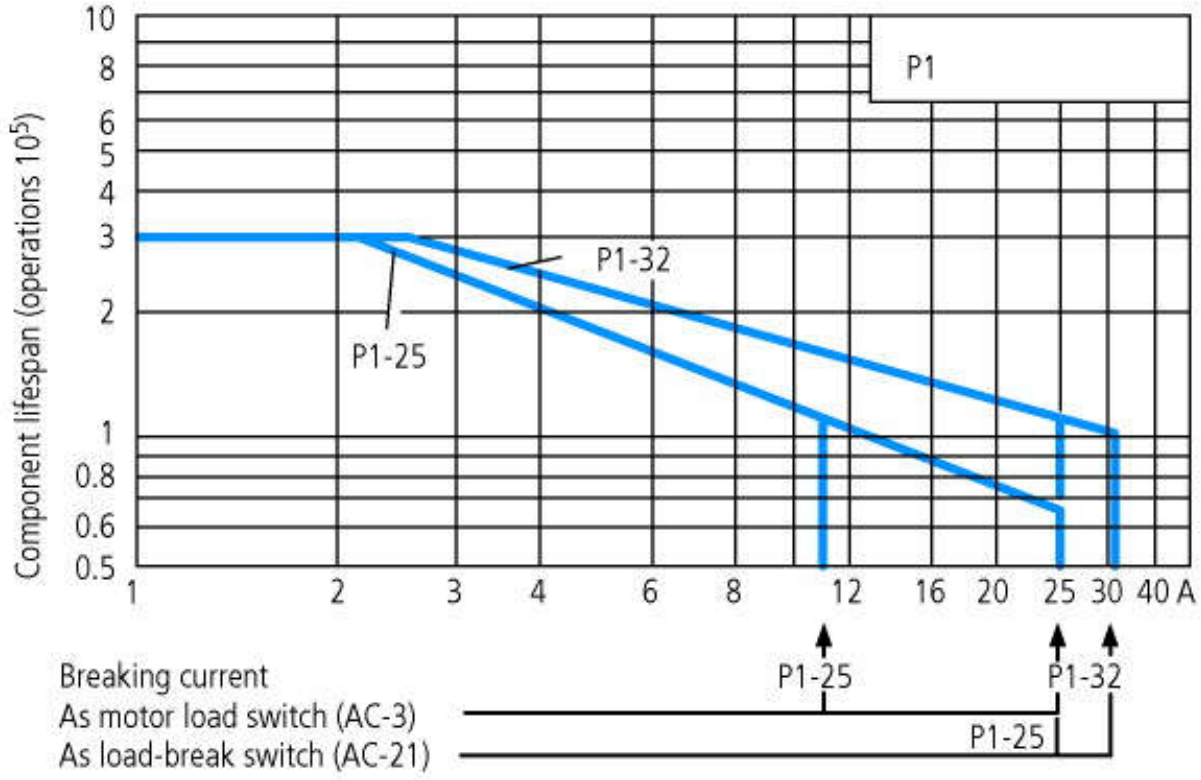

For utilisation category AC-4 (extreme load: 100 % inching, reversing or plugging)
The blocked rotor current of the motor should not exceed the rated current of the switch for AC-21A to ensure a reasonable device lifespan.

Dimensions

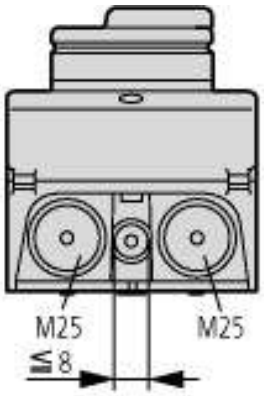
M25
M25
≦8

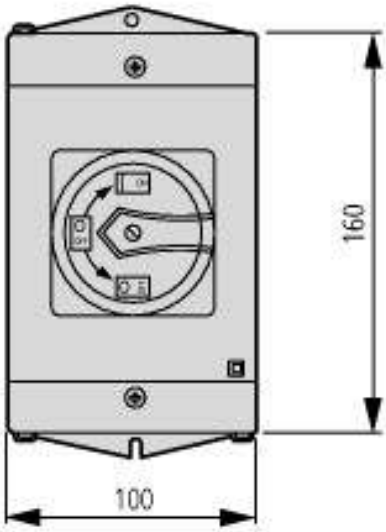
160
100

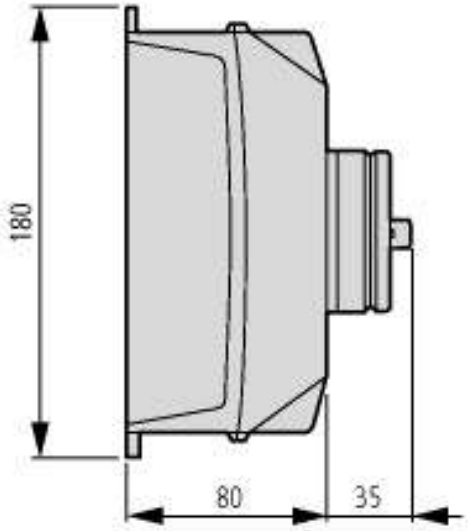
180
80
35

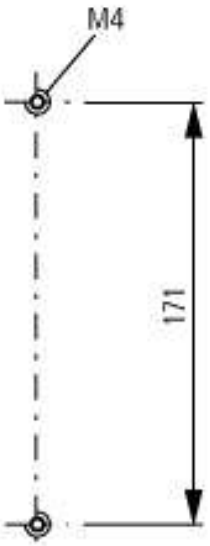
M4
171

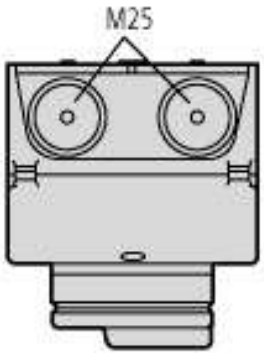
M25

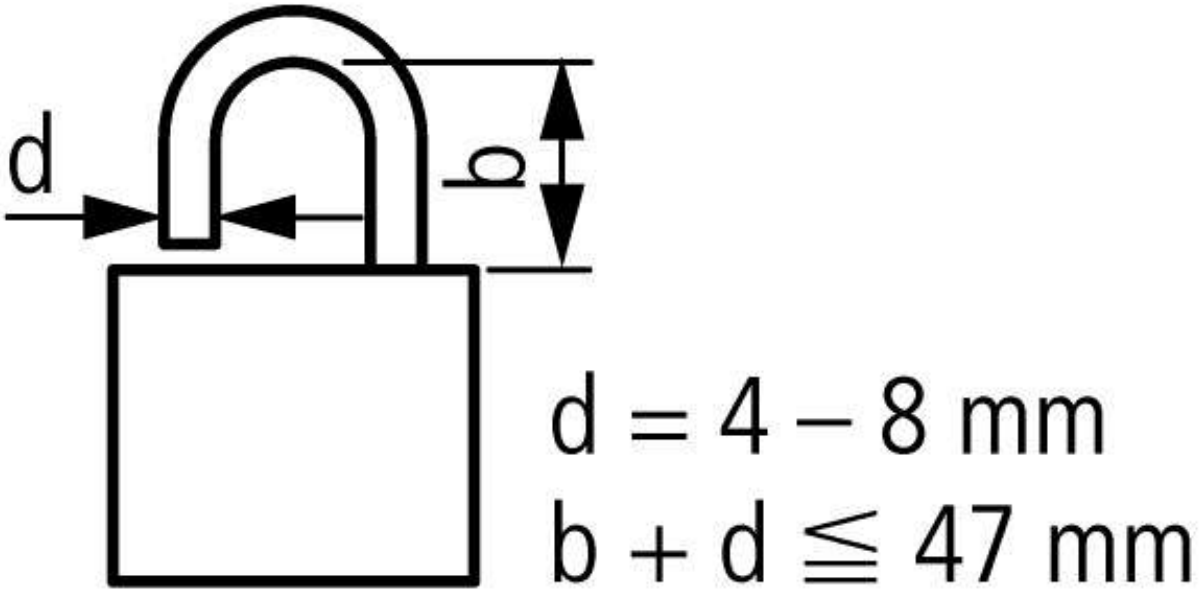
d
b
d = 4 – 8 mm
b + d ≦ 47 mm

3 Padlocks

Additional product information (links)

IL03802001Z (AWA1150-1689) Switch-Disconnectors in insulated enclosures	
IL03802001Z (AWA1150-1689) Switch-Disconnectors in insulated enclosures	ftp://ftp.moeller.net/DOCUMENTATION/AWA_INSTRUCTIONS/IL03802001Z2011_06.pdf
http://ecat.moeller.net/flip-cat/?edition=HPLEN&startpage=4.87	

© 04/2013 by Eaton Industries GmbH