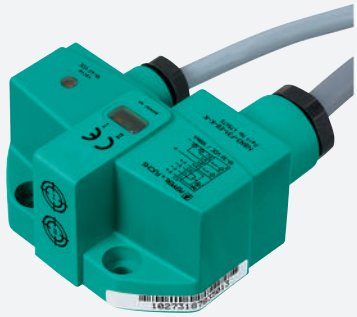

Inductive sensor

NBN3-F31-E8-K-K

- Direct mounting on standard actuators
- Fixed setting

Dimensions

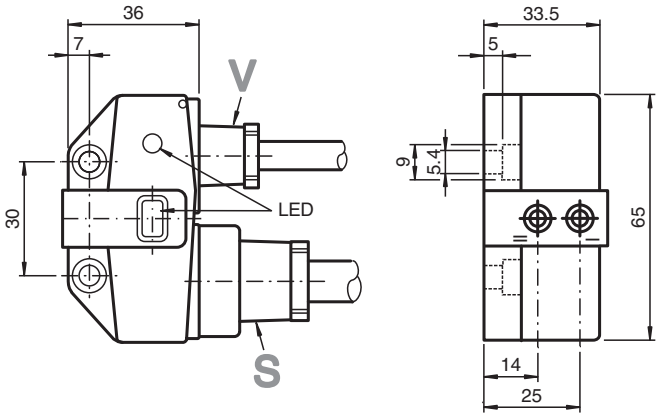

Technical Data

General specifications		
Switching function		2 x normally open (NO)
Output type		PNP
Rated operating distance	s_n	3 mm
Installation		flush mountable
Output polarity		DC
Assured operating distance	s_a	0 ... 2.43 mm
Actual operating distance	s_r	2.7 ... 3.3 mm typ.
Reduction factor r_{Al}		0.5
Reduction factor r_{Cu}		0.4
Reduction factor r_{304}		1
Reduction factor r_{St37}		1.2
Output type		3-wire
Nominal ratings		
Operating voltage	U_B	10 ... 30 V DC
Switching frequency	f	0 ... 500 Hz
Hysteresis	H	typ. 5 %

Release date: 2025-02-26 Date of issue: 2025-02-26 Filename: 047567_eng.pdf

Technical Data

Reverse polarity protection		all connections
Short-circuit protection		pulsing
Voltage drop	U_d	≤ 3 V
Operating current	I_L	0 ... 100 mA
Off-state current	I_r	0 ... 0.5 mA typ. 0.1 µA at 25 °C
No-load supply current	I_0	≤ 25 mA
Operating voltage indicator		LED, green
Switching state indicator		LED, yellow
Valve status indicator		LED, yellow
Functional safety related parameters		
$MTTF_d$		780 a
Mission Time (T_M)		20 a
Diagnostic Coverage (DC)		0 %
Valve circuit		
Voltage		max. 32 V DC
Current		max. 240 mA
Short-circuit protection		no
Reverse polarity protection		yes, with reversed output LED is out of function, therfore more power for solenoid valve
Compliance with standards and directives		
Standard conformity		
Standards		EN IEC 60947-5-2
Approvals and certificates		
UL approval		cULus Listed, General Purpose
CCC approval		CCC approval / marking not required for products rated ≤36 V
Ambient conditions		
Ambient temperature		-25 ... 70 °C (-13 ... 158 °F)
Mechanical specifications		
Connection (system side)		PVC cable 5 m
Core cross section (system side)		0.75 mm^2
Connection (valve side)		PVC cable 0.5 m
Core cross section (valve side)		0.75 mm^2
Housing material		PBT
Sensing face		PBT
Degree of protection		IP67
Tightening torque, fastening screws		≤ 5 Nm
Dimensions		
Height		33.5 mm
Width		65 mm
Length		36 mm

Release date: 2025-02-26 Date of issue: 2025-02-26 Filename: 047567_eng.pdf

Connection

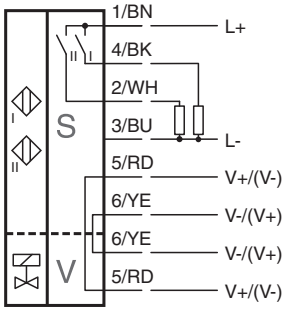

Release date: 2025-02-26 Date of issue: 2025-02-26 Filename: 047567_eng.pdf