Series 57M-EM

16MM MINIATURE PANEL SEALED METAL

The 57M is a miniature switch designed for rugged environments. The housing alloy with velour chrome plating. It is available as maintained or momentary action, Electro-menchanical operation with Gold plated contacts and solder terminals. It is ideal for a multitude of applications.



ACTUAL SIZE

APPLICATIONS:

- Security Equipment
- Industrial Control
- Medical Equipment
- Military Equipment
- Food Processing
- Transportation
- Computers

KEY FEATURES:

- Zinc Alloy/Velour Chrome Plated
- Center Spot LED and Non-Lighted Versions
- Maintained or Momentary Action
- Panel Sealed to IP67
- RoHS Compliant
- Electro-Mechanical
- Gold Plated Contacts and Terminals
- 5A / 28VDC with UL61058

ORDERING INFORMATION:

Series:
Blank Gold Contact IP67
S Silver Contact IP67
N Silver Contact
C Silver Contact Screw Terminal IP67
D Silver Contact Short Housing IP67
G Silver Contact IP67/2A
SA Silver Contact IP67/5A

Switch Function:
1 Mechanical, Momentary, Solder Terminal
2 Mechanical, Maintained, Solder Terminal
5 Mechanical, Momentary, PC Terminal
6 Mechanical, Maintained, PC Terminal
A Mechanical, Momentary, Wire Leads
B Mechanical, Maintained, Wire Leads
9 Special, Digits Are in Serial Order

Housing Material:
1 Zinc Alloy, Velour Chrome Plated
3 Zinc Alloy, Black
4 Stainless Steel, Natural

Illumination:
0 Nin-lit
1 Center Spot Illumination
2 Ring Illumination
3 Standby Logo Illumination
4 High Button Non-Illumination

LED Color:
N None
G Green
R Red
A Amber
Y Yellow
B Blue
W White
RB Red / Blue
RG Red / Green

Voltage Resistor:
If Blank*
05 5V Forward
12 12V Forward
24 24V Forward

57M- [ ] [ ] [ ] [ ] [ ] [ ]

* Current limiting resistor is required to limit LED forward current to 20 mA (not included).

STANDARDS / AGENCY / RATINGS:

RoHS COMPLIANT 2002 / 95 / EC

IEC IP67 COMPLIANT

Contact an Authorized Distributor or Factory for Pricing

SERIES 57M: 16MM MINIATURE PANEL SEALED METAL

PRODUCT DRAWINGS

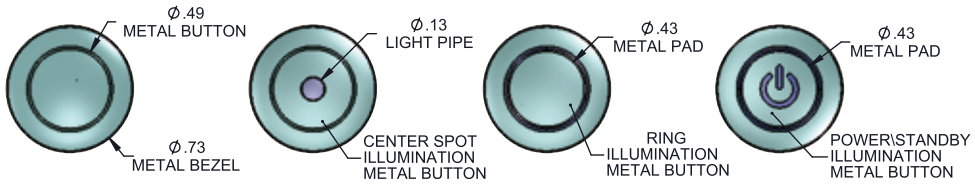

57M/ S57M SERIES

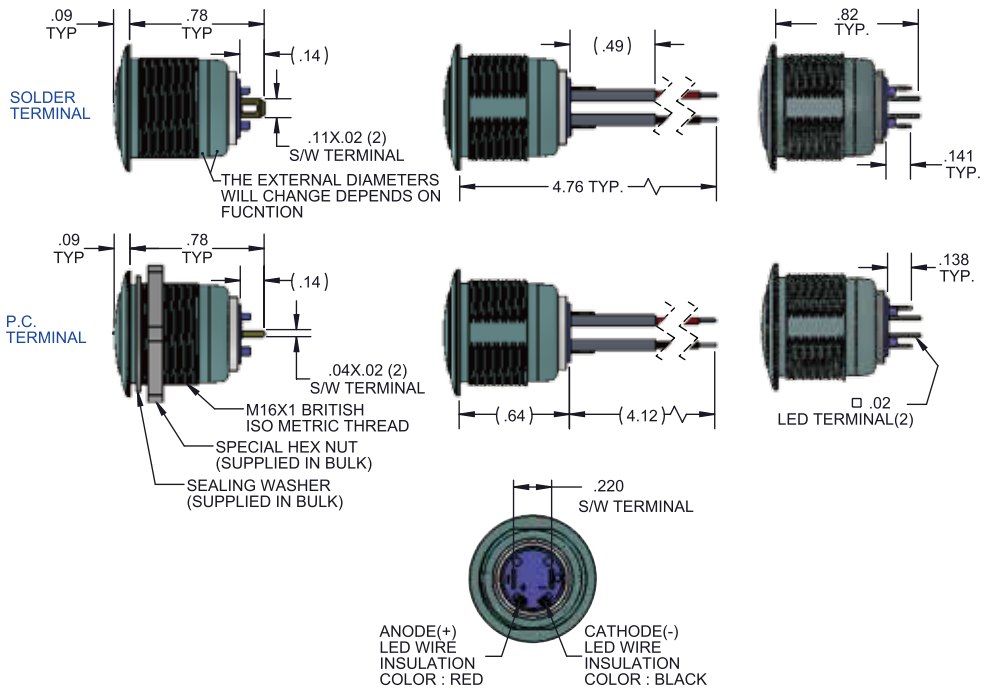

WIRELEADS

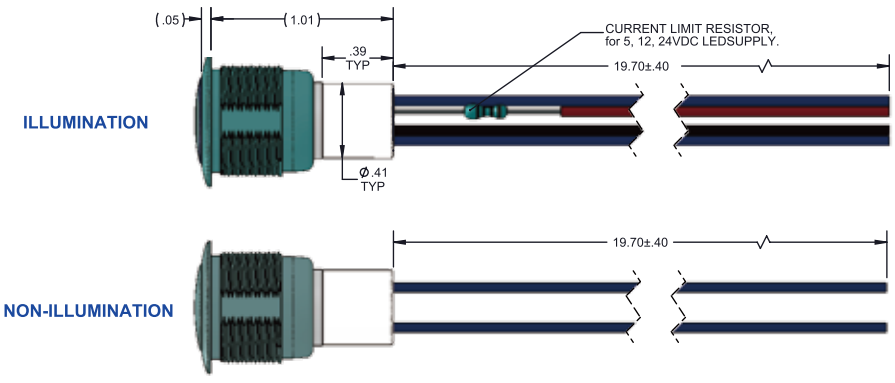

D57M SERIES

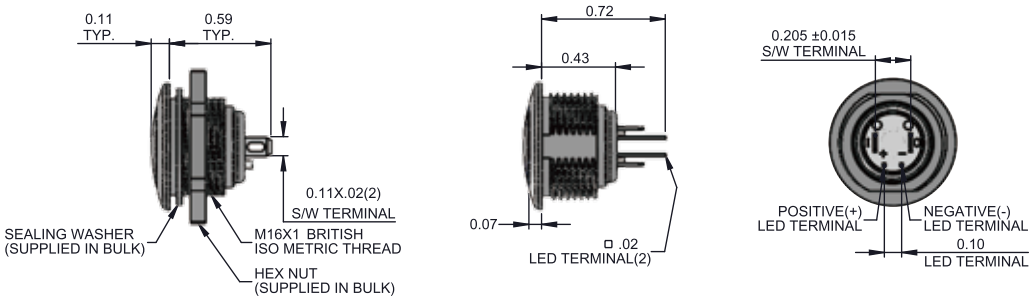

MECHANICAL / ELECTRICAL CHARACTERISTICS:

CIRCUIT:
SPST-NO-DB

BUTTON TRAVEL (Nominal):
0.09inches / 2.3mm

OPERATING FORCE (Nominal):
3N / 306g

CONTACT BOUNCE (Nominal):
1 millisecond

PANEL THICKNESS:
0.20 - 0.120 inches/
0.5 - 3mm

TEMPERATURE INDEX:
-40°C to +85°C

TORQUE (MAX):
10 inch pounds

LED OPERATION TEMPERATURE:
-13°F to +185°F / -25°C to +85°C

CURRENT RATINGS(Resistive)

57M (Momentary)
250mA @ 12VDC, 100k Cycles
150mA @ 28VDC, 150k Cycles
100mA @ 48VDC, 100k Cycles
10mA @ 12VDC, 1,000k Cycles

57M (Maintained)
50,000 Cycles Nominal

S57M (Momentary)
10mA @ 12VDC, 200k Cycles

S57M (Maintained)
20k Cycles Nominal

D57M (Momentary)
10mA @ 12VDC,200K Cycles

ELECTRICAL SPECIFICATIONS

DIELECTRIC STRENGTH:
1,000 VAC

INSULATION RESISTANCE:
1GΩ

CONTACT RESISTANCE:
50mΩ max (intial)

Designs and specifications are subject to change without notice due to product improvement.

TW Switches
SENSORS, SWITCHES, ELECTRONIC CONTROLS
800.544.3354

SERIES 57M: 16MM MINIATURE PANEL SEALED METAL

MECHANICAL / ELECTRICAL CHARACTERISTICS:

CIRCUIT:
SPST-NO-DB

BUTTON TRAVEL (Nominal):
0.09inches / 2.3mm

OPERATING FORCE (Nominal):
3N / 306g

CONTACT BOUNCE (Nominal):
1 millisecond

PANEL THICKNESS:
0.20 - 0.120 inches/
0.5 - 3mm

TEMPERATURE INDEX:
-40°C to +85°C

TORQUE (MAX):
10 inch pounds

LED OPERATION TEMPERATURE:
-13°F to +185°F / -25°C to +85°C

CURRENT RATINGS(Resistive)

G57M (Momentary)
2A @ 24VDC, 40k Cycles
1A @ 250VAC, 40k Cycles

G57M (Maintained)
2A @ 24VDC, 20k Cycles
1A @ 250VAC, 20k Cycles

N57M (Momentary)
10mA @ 12VDC, 200k Cycles

N57M (Maintained)
20k Cycles Nominal

ELECTRICAL SPECIFICATIONS

DIELECTRIC STRENGTH:
1,000 VAC

INSULATION RESISTANCE:
1GΩ

CONTACT RESISTANCE:
50mΩ max (intial)

G57M SERIES

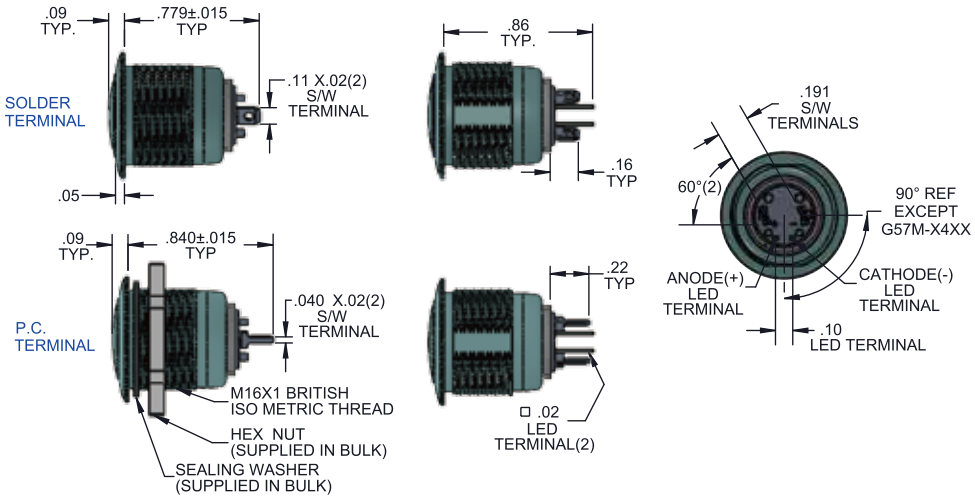

N57M SERIES

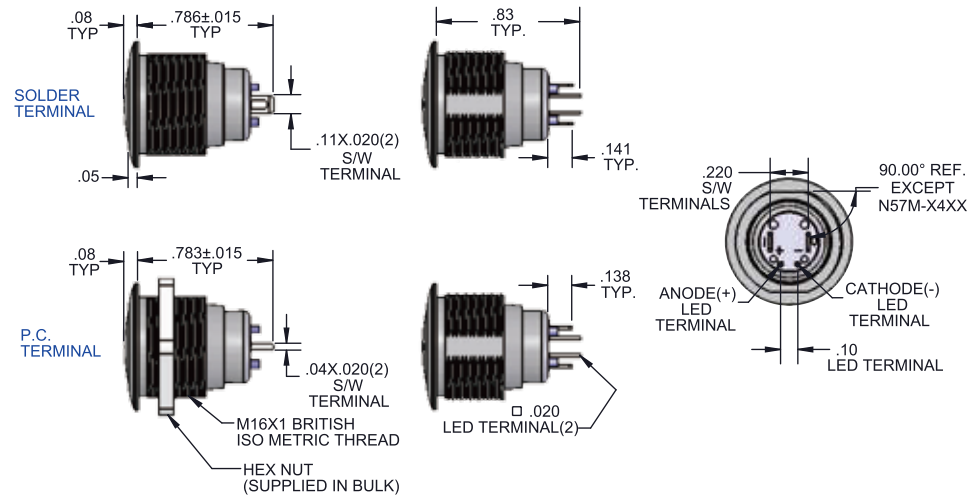

WIRELEADS

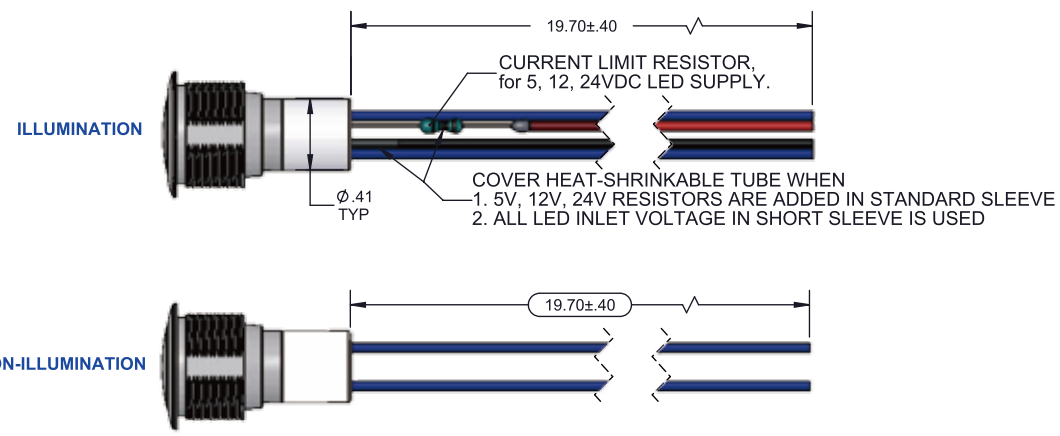

Contact an Authorized Distributor or Factory for Pricing

SERIES 57M: 16MM MINIATURE PANEL SEALED METAL

C57M SERIES

C57M-1X0N/2X0N

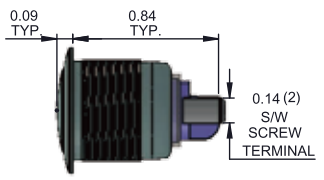

C57M-1XXX/2XXX

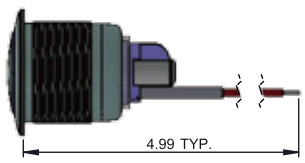

C57M-EXXX/FXXX

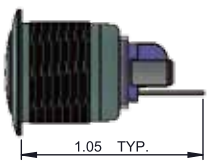

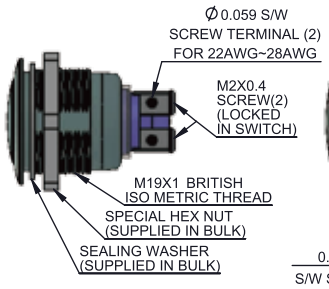

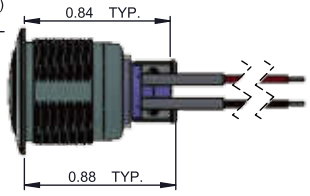

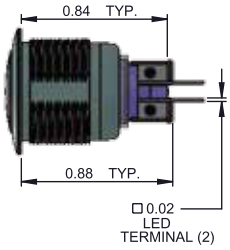

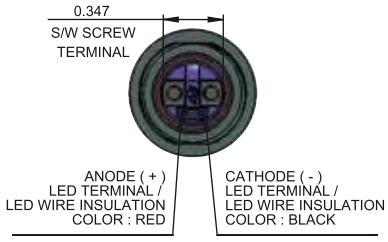

SA57M SERIES

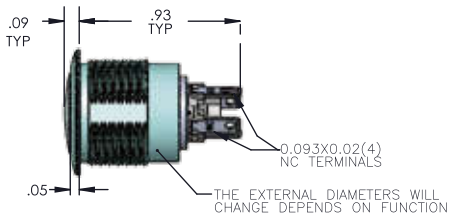

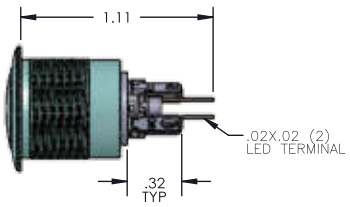

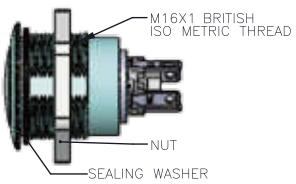

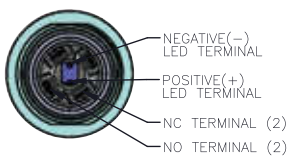

HIGH BUTTON TYPE

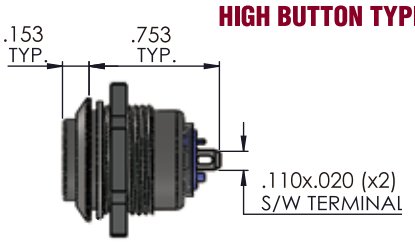

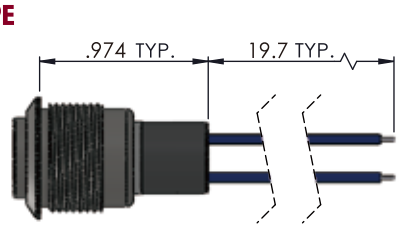

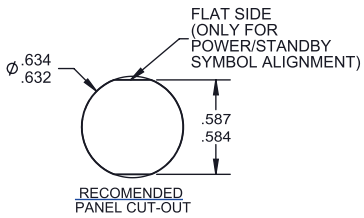

MECHANICAL / ELECTRICAL CHARACTERISTICS:

CIRCUIT:
SPST-NO-DB

BUTTON TRAVEL (Nominal):
0.09inches / 2.3mm

OPERATING FORCE (Nominal):
3N / 306g

CONTACT BOUNCE (Nominal):
1 millisecond

PANEL THICKNESS:
0.20 - 0.120 inches/
0.5 - 3mm

TEMPERATURE INDEX:
-40°C to +85°C

TORQUE (MAX):
10 inch pounds

LED OPERATION TEMPERATURE:
-13°F to +185°F / -25°C to +85°C

CURRENT RATINGS(Resistive)

C57M (Momentary)
10mA @ 12VDC,200K Cycles

C57M (Maintained)
20k Cycles Nominal

SA57M (Momentary)
5A@28VDC,125/250 VAC 25K Cycles Nominal

ELECTRICAL SPECIFICATIONS

DIELECTRIC STRENGTH:
1,000 VAC

INSULATION RESISTANCE:
1GΩ

CONTACT RESISTANCE:
50mΩ max (intial)

PANEL MOUNTING AND CONSTRUCTION INFORMATION

The series 57M mounts easily into panels of minimum 0.20"(0.5mm) and maximum 0.120"(3mm) thicknesses. Front panel sealing to IP67 is achieved by a sealing washer which is fitted to the body of the switch before it is inserted into the panel hole cutout. It is held onto the panel by means of a metal hex nut tightened down to a torque of 10 inch pounds to achieve the correct sealing pressure. Designs and specifications are subject to change without notice due to productim provement.

TW Switches
SENSORS, SWITCHES, ELECTRONIC CONTROLS

Designs and specifications are subject to change without notice due to product improvement.

800.544.3354