sifam tinsley
PRECISION INSTRUMENTATION



Multifunction Meters

Transducers & Isolators

Temperature Controllers

Converters & Recorders

Digital Panel Meters

Current Transformers

Analogue Panel Meters

Shunts

Digital Multimeters

Clamp Meters

Insulation Testers

RE72
TEMPERATURE CONTROLLER

User Manual - Issue 1.0

SUBJECT TO CHANGE WITHOUT NOTICE
This manual superseded all previous versions – please keep for future reference

Temperature Controller

Features

- Universal measuring input
- Binary input control
- Set point value: fixed value, programmed or from an additional input.
- On/off , PID, PID step-by-step control (valve control) or PID of heating-cooling type
- Soft start
- 8 types of alarms
- Function of bistable alarm (LATCH)
- Timer function
- Measurement of heater current and heater burning control or short-circuit of the control element (e.g. SSR)





1. Example of Application

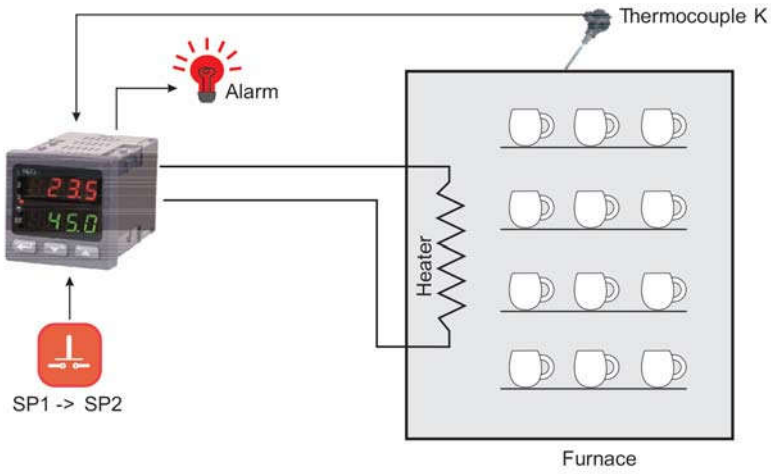

Control of ceramics burning process

2. Input



3. Ouputs

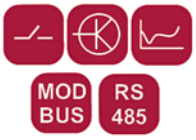

4. Galvanic Isolation



5. Input

Input Type	Range	Error
Pt100	-200 .. 850°C	0.2%
Pt1000	-200 .. 850°C	0.2%
Fe-CuNi (J)	-100 .. 1200°C	0.3%
Cu-CuNi (T)	-100 .. 400°C	0.3%
NiCr-NiAl (K)	-100 .. 1372°C	0.3%
PtRh10-Pt (S)	0 .. 1767°C	0.5%
PtRh13-Pt (R)	0 .. 1767°C	0.5%
PtRh30-PtRh6 (B)	200 .. 1767°C	0.5%
NiCr-CuNi (E)	-100 .. 1000°C	0.3%
NiCrSi-NiSi (N)	-100 .. 1300°C	0.3%
chromel-kopel (L)	-100 .. 800°C	0.3%
Current channels (I)	0/4 .. 20 mA	0.2% +/- 1 digit
Voltage channels (U)	0 .. 5/10 V	0.2% +/- 1 digit

6. Outputs

Output type	Properties	Load capacity
Voltageless relay output	NO contact	2 A/ 230 V a.c. (out. 1 and 2) 1 A/ 230 V a.c. (out. 3)
Voltage transistor output	0/5 V	max 40 mA
Continuous voltage output	0 .. 10 V	at $R_{load} \geq 1$ kΩ
Continuous current output	0 .. 20 mA, 4 .. 20 mA	at $R_{load} \leq 500$ Ω

7. Digital Interface

Interface type	RS-485	Mode
Protocol	Modbus RTU	8N2, 8E1, 8O1, 8N1
Transmission rate	4.8, 9.6, 19.2, 38.4, 57.6 kbit/s	

8. External Features

Readout field	2 x 4 digits	digit height: 10 mm, red and green colours
Dimensions	48 x 48 x 93 mm	
Weight	< 0.2 kg	
Protection grade	from frontal plate: IP65	from terminal side: IP20

9. Rated Operating Conditions

Supply voltage	85 .. 253 V a.c./ d.c.	20 .. 40 V a.c./d.c.
Temperature	ambient: 0...23...50˚C	storage: -20...70˚C
Relative humidity	< 85%	(without condensation of water vapour)
Operating position	any	

10. Safety and Compatability Requirements

Electromagnetic compataility	noise immunity	acc. to EN 61000-6-2
	noise emissions	acc. to EN 61000-6-4
Pollution level	2	
Installation category	III	
Maximal phase-to-earth operating voltage	supply, output: 300 V	input circuits: 50 V
Altitude above sea level	2000 m	

11. Connection Diagram

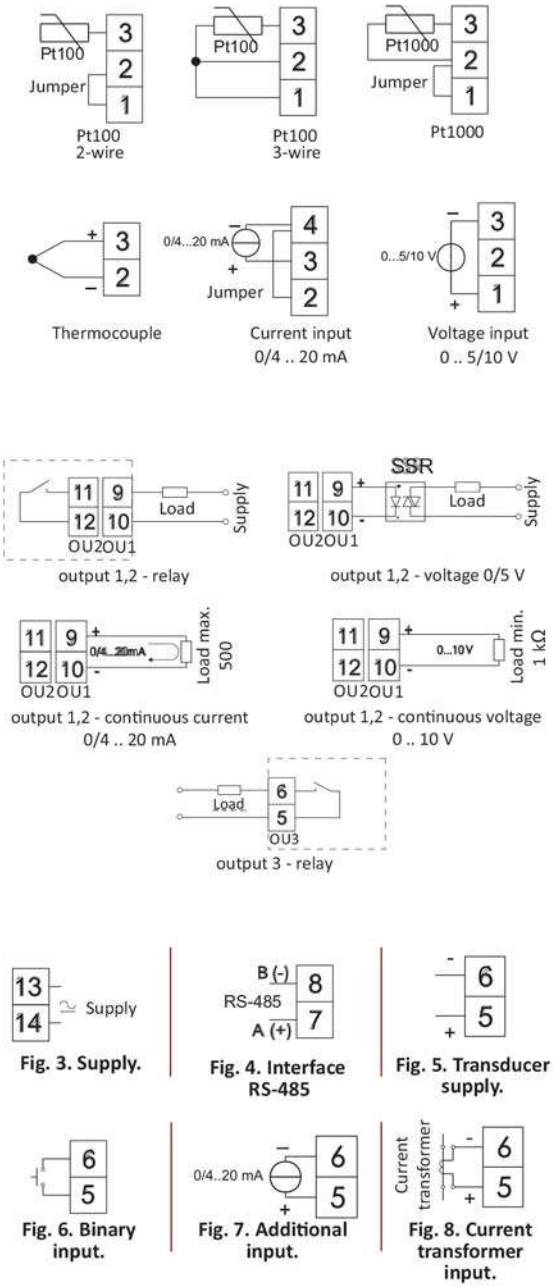

Fig. 3. Supply.

Fig. 4. Interface RS-485

Fig. 5. Transducer supply.

Fig. 6. Binary input.

Fig. 7. Additional input.

Fig. 8. Current transformer input.

12. Ordering Information

	RE72-	X	X	X	X	X	X	X
Output 1:								
relay		1						
voltage: 0/5 V		2						
continuous current: 0/4 .. 20 mA		3						
continuous voltage: 0 .. 10 V		4						
Output 2:								
relay1)			1					
voltage: 0/5 V			2					
continuous current: 0/4 .. 20 mA			3					
continuous voltage: 0 .. 10 V			4					
Options:								
none				0				
output 3 - relay				1				
binary input				2				
current transformer input[2])				3				
additional current input: 0/4 .. 20 mA				4				
transducer supply: 24 V d.c. 1 W				5				
Supply:								
85 .. 253 V a.c./ d.c.					1			
20 .. 40 V a.c./ d.c.					2			
Version:								
standard						00		
custom-made[3])						XX		
Language version:								
Polish							P	
English							E	
other[3])							X	
Acceptance tests:								
without extra quality requirements								8
with an extra quality inspection certificate								7
according to customer's request[3])								X

1) - only, when a relay is also selected on the output 1
2) - only, when a relay or voltage output 0/5 V is also selected
3) - only, after agreeing with the manufacturer

Ordering example:

The code: **RE72 - 1 2 2 1 00 E 8** means:

RE72 - temperature controller of RE72 type
1 - output 1: relay
2 - output 2: voltage 0/5 V
2 - op? on with binary input
1 - supply: 85 .. 253 V a.c./ d.c.
00 - standard version
E - documentation and descriptions in English version
8 - without extra quality requirements.

Contact



Sifam Tinsley Instrumentation Ltd

1 Warner Drive
Springwood Industrial Estate
Braintree, Essex
CM7 2YW

Tel: 01376 335271
E-mail: sales@sifamtinsley.com

www.sifamtinsley.co.uk