sifam tinsley
PRECISION INSTRUMENTATION



Multifunction Meters

Transducers & Isolators

Temperature Controllers

Converters & Recorders

Digital Panel Meters

Current Transformers

Analogue Panel Meters

Shunts

Digital Multimeters

Clamp Meters

Insulation Testers

BETA 90
DIGITAL PANEL METER

User Manual - Issue 1.0

SUBJECT TO CHANGE WITHOUT NOTICE
This manual superseded all previous versions – please keep for future reference

Beta 90

Features

- Factory pre-set with many measuring ranges
- Measuring ranges selectable using jumpers
- Zero point and final value adjustable (inc. 4... 20 mA)
- 230 V AC power supply option
- Overall depth only 72 mm

1. Application

Beta 90. The digital panel meter is designed for industrial applications, which frequently require precise, on-site adjustment of the display range. It can be used in industrial automation and for laboratory uses. It provides cost-effective solution for virtually all switchboard instruments.

2. Description

The Beta 90 (24 x 96) are digital panel instruments for measurement of DC current and DC voltage with 9 measuring ranges. 3 ranges for power supply are available. The measuring ranges and zero point, selectable using jumpers at the back. The choice of many factory pre-set measuring ranges is included, with user adjustments available for the zero and full-scale values.

3. Technical Specifications

Display	
Display range	1999
Decimal point position	selectable by rear
	jumper position
Negative display	"-"
indication	
Digit height	14 mm / 7-segment digits
Overload indication	Last 3 digits blank
Setting time	< 1s (0-99%)

Measuring Ranges	
Direct voltage	0-0.2V
(Input current < 300 mA)	0-1V
	0-5V
	0-25V
	0-100V
	0-300V
Direct current	0-1mA
(Voltage drop < 600mV)	0-20mA
	0-200mA
Range adjustment span	from 20% to 100% of
Zero offset [suppression]	range up to -1000
Accuracy	< 0.2 % + 1 digit
Temperture coefficient	100 ppm/°C, plus
Zero point drift	100 ppm/°C

Options	
Option	Brightness adjustment
	Zero point adjustment
	HOLD input

Digital Input	
HOLD [option]	"0"

Power Supply	
Direct voltage DC	21-30V + 15% 4 W approx.
Alternating voltage AC	230V + 10 % -15 % 1.3 W approx.

Ambient conditions	
Operating temperature	0°C to 50°C
Storage temperature	-40°C to 80°C

Dimensions & Bezel Size	
96mm x 24 mm	DIN 43 718

Weights	
Panel cut-out	92 +0.8 mm x 22.2 +0.8
Overall depth	0.3 mm 72 mm
Weight	210 g. Approx. [5V DC version 90 g]

Sundry	
Connections	plug-in screw terminal block

Applicable Regulations and Standards	
Protection class	IP 20 to IEC EN 60 529
Front	IP 54 (IP 65 on request)
Climatic class	Class 2 VDE/DIN 3540
Safety class	II to IEC 348 / VDE 0411
Device safety	To IEC EN 61 010
EMC immunity	DIN EN 61 000-4-1 to 4
EMC radiated interference	DIN EN 50 081 class B

4. Design & Installation

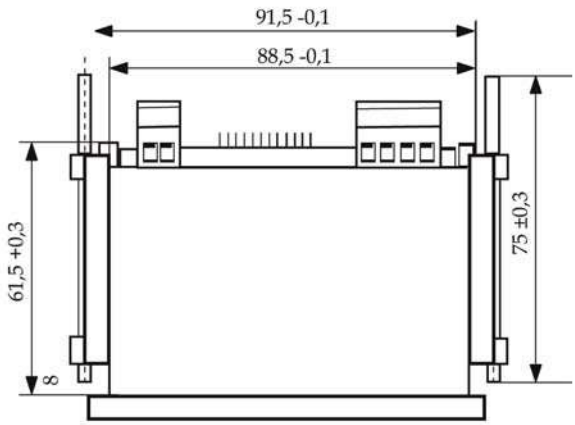

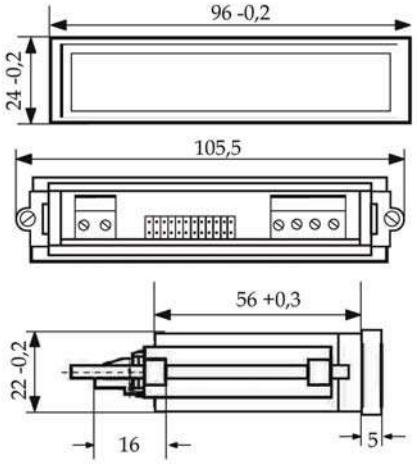

5. Panel Cut-out

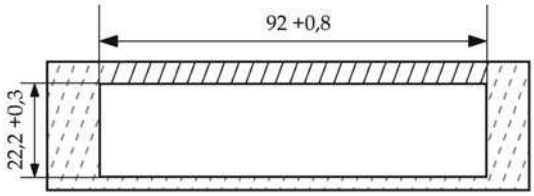

6. Connections

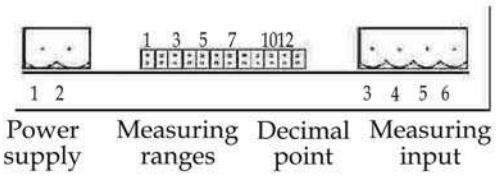

7. Ordering Information

Product Code	BT90-	X	X	X	XX	X	X	X	00000
Size	24X96	C							
Display Size	Not Applicable		0						
	14mm		1						
	20mm		2						
Meter Type	MODEL D			1					
	MODEL F			2					
	MODEL S			3					
	MODEL VDC C			4					
	MODEL VDC F			5					
	MODEL ADC B			6					
Input Range	0-1mA				05				
	0-20mA				02				
	4-20mA				04				
	0-200mA				03				
	0-60mV				0A				
	0-75mV				0B				
	0-150mV				0C				
	0-200mV				0D				
	0-2V				1A				
	0-5V				1G				
	0-10V				1B				
	0-12V				1F				
	0-20V				1C				
	0-25V				1H				
	0-100V				1J				
	0-200V				1D				
	0-300V				1K				
	0-500V				1E				
	0-1000V				1L				
	+/-10mA				07				
Power Supply	5D					J			
	12D					8			
	24D					9			
	48D					A			
	110D					B			
	110A					2			
	230A					6			
	240A					7			
	45-300U					G			
	220D					E			
	120D					K			
	125D					C			
IP Protec?on	W/O IP Protec?on						0		
	With IP Protec?on						1		
Display	NORMAL DISPLAY							0	
	-/+ DISPLAY							1	
	Hz DISPLAY							2	

Contact

Sifam Tinsley Instrumentation Ltd

1 Warner Drive
Springwood Industrial Estate
Braintree, Essex
CM7 2YW

Tel: 01376 335271
E-mail: sales@sifamtinsley.com

www.sifamtinsley.co.uk