Pneumatic Valves
Series V60 - 63

3/2, 5/2, 5/3 and 2 x 3/2 Directional control valves
Solenoid and pilot actuated
Rest position and impulse versions

- **High flow rate**
- **Small volumetric size**
- **Multiply proven sealing system**
- **Manual override selectable**
- **Maintenance-free**
- **Low power consumption**
- **Application oriented pilot controls**
- **Manifold system for easy assembly**
- **Different pressure ranges possible**



Technical Data

Fluid:
Filtered (filter fineness < 50 µm), lubricated[1)] or non-lubricated compressed air
Actuation:
Electromagnetically or pneumatically controlled
Mounting position:
Optional
Connection :
G 1/8 up to G 1/2
Operating pressure :
1.5/2 up to 8/10 bar
Flow direction
internal pilot supply: Fixed
external pilot supply: Optional
Flow rate :
500 up to 4200 l/min
Temperatures :
Fluid: - 10 up to + 50 °C
Ambient: - 10 up to + 50 °C
Material:
Housing and base plate made of aluminium
Spindle made of stainless steel,
Piston, spacers and cover made of synthetic material,
static and dynamic seals made of NBR,
zinc plated screws,
springs made of stainless steel.

Ordering Information

To place an order, choose the valve design and then complement with the code from Table 2. E.g. V61B513A-A213L for a 5/2 valve, solenoid actuated, air spring return, manual override push & lock, 24 V DC solenoid according to DIN EN 175 301-803 (DIN 43650 B).

Connectors

Standard see data sheet **7.7.**002
AS-i see data sheet **7.7.**003

Alternative Models

With NPT connection

[1)] Oil recommendation: Shell Hydrol DO 32, ESSO Febis K 32 (as of 07/92) or comparable oils with DVI values < 8 (DIN 53521) and ISO viscosity class 32 to 46 (DIN 51519)

Our policy is one of continued research and development. We therefore reserve the right to amend, without notice, the specifications given in this document.

3/2 directional control valves, solenoid actuated

Symbol	Type	Size	Pilot supply	Pilot exhaust	Solenoid variant	Flow (l/min)	Operating pressure (bar)	Pilot pressure external (bar)	Weight (kg)	Dimensional drawing No.
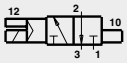 NC	**V60A413A-Ax*****	G 1/8	internal	not collected	1	750	2 ... 8	–	0,22	M01
	V60A423A-Ax***	G 1/8	external	not collected	1	750	-0,9 ... 8	3 ... 8	0,22	M01
	V60A413D-Cx13A	G 1/8	internal	collected	2	750	2 ... 10	–	0,21	M04
	V60A423D-Cx13A	G 1/8	external	collected	2	750	-0,9 ... 10	3 ... 10	0,21	M04
	V61B413A-Ax***	G 1/4	internal	not collected	1	1300	2 ... 8	–	0,29	M01
	V61B423A-Ax***	G 1/4	external	not collected	1	1300	-0,9 ... 8	3 ... 8	0,29	M01
	V61B413D-Cx13A	G 1/4	internal	collected	2	1300	2 ... 10	–	0,27	M04
	V61B423D-Cx13A	G 1/4	external	collected	2	1300	-0,9 ... 10	3 ... 10	0,27	M04
	V62C413A-Ax***	G 3/8	internal	not collected	1	2600	2 ... 8	–	0,52	M01
	V62C423A-Ax***	G 3/8	external	not collected	1	2600	-0,9 ... 8	3 ... 8	0,52	M01
	V62C413D-Cx13A	G 3/8	internal	collected	2	2600	2 ... 10	–	0,50	M04
	V62C423D-Cx13A	G 3/8	external	collected	2	2600	-0,9 ... 10	3 ... 10	0,50	M04
	V63D413A-Ax***	G 1/2	internal	not collected	1	4200	2 ... 8	–	0,78	M05
	V63D423A-Ax***	G 1/2	external	not collected	1	4200	-0,9 ... 8	3 ... 8	0,78	M05
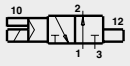 NO	**V60A313A-Ax*****	G 1/8	internal	not collected	1	750	2 ... 8	–	0,22	M02
	V60A323A-Ax***	G 1/8	external	not collected	1	750	-0,9 ... 8	3 ... 8	0,22	M02
	V60A313D-Cx13A	G 1/8	internal	collected	2	750	2 ... 10	–	0,21	M04
	V60A323D-Cx13A	G 1/8	external	collected	2	750	-0,9 ... 10	3 ... 10	0,21	M04
	V61B313A-Ax***	G 1/4	internal	not collected	1	1300	2 ... 8	–	0,29	M02
	V61B323A-Ax***	G 1/4	external	not collected	1	1300	-0,9 ... 8	3 ... 8	0,29	M02
	V61B313D-Cx13A	G 1/4	internal	collected	2	1300	2 ... 10	–	0,27	M04
	V61B323D-Cx13A	G 1/4	external	collected	2	1300	-0,9 ... 10	3 ... 10	0,27	M04
	V62C313A-Ax***	G 3/8	internal	not collected	1	2600	2 ... 8	–	0,52	M02
	V62C323A-Ax***	G 3/8	external	not collected	1	2600	-0,9 ... 8	3 ... 8	0,52	M02
	V62C313D-Cx13A	G 3/8	internal	collected	2	2600	2 ... 10	–	0,50	M04
	V62C323D-Cx13A	G 3/8	external	collected	2	2600	-0,9 ... 10	3 ... 10	0,50	M04
	V63D313A-Ax***	G 1/2	internal	not collected	1	4200	2 ... 8	–	0,78	M05
	V63D323A-Ax***	G 1/2	external	not collected	1	4200	-0,9 ... 8	3 ... 8	0,78	M05
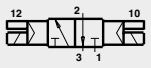	**V60A411A-Ax*****	G 1/8	internal	not collected	1	750	1,5 ... 8	–	0,30	M03
	V60A422A-Ax***	G 1/8	external	not collected	1	750	-0,9 ... 8	3 ... 8	0,30	M03
	V60A411D-Cx13A	G 1/8	internal	collected	2	750	1,5 ... 10	–	0,20	M04
	V60A422D-Cx13A	G 1/8	external	collected	2	750	-0,9 ... 10	3 ... 10	0,20	M04
	V61B411A-Ax***	G 1/4	internal	not collected	1	1300	1,5 ... 8	–	0,38	M03
	V61B422A-Ax***	G 1/4	external	not collected	1	1300	-0,9 ... 8	3 ... 8	0,38	M03
	V61B411D-Cx13A	G 1/4	internal	collected	2	1300	1,5 ... 10	–	0,27	M04
	V61B422D-Cx13A	G 1/4	external	collected	2	1300	-0,9 ... 10	3 ... 10	0,27	M04
	V62C411A-Ax***	G 3/8	internal	not collected	1	2600	1,5 ... 8	–	0,61	M03
	V62C422A-Ax***	G 3/8	external	not collected	1	2600	-0,9 ... 8	3 ... 8	0,61	M03
	V62C411D-Cx13A	G 3/8	internal	collected	2	2600	1,5 ... 10	–	0,50	M04
	V62C422D-Cx13A	G 3/8	external	collected	2	2600	-0,9 ... 10	3 ... 10	0,50	M04
	V63D411A-Ax***	G 1/2	internal	not collected	1	4200	1,5 ... 8	–	0,87	M06
	V63D422A-Ax***	G 1/2	external	not collected	1	4200	-0,9 ... 8	3 ... 8	0,87	M06

x Insert code for manual override
*** Insert voltage code from table, or 000 for version without solenoid.

NC = Normally closed
NO = Normally open

Selection of solenoid and voltage

Please insert **solenoid code** instead of *** under Valve type.

Solenoid variant 1 (solenoid rotates 4 x 90°)

Voltage	Code	Power consumption Inrush / Hold	Single solenoid Type
22 mm Solenoid with plug interface DIN EN 175 301-803 (DIN 43650 B)			
12 V DC	**12L**	2 W	V10626-A12L
24 V DC	**13L**	2 W	V10626-A13L
24 V 50/60 Hz	**14L**	4 / 2,5 VA	V10626-A14L
48 V 50/60 Hz	**16L**	4 / 2,5 VA	V10626-A16L
110/120 V 50/60 Hz	**18L**	4 / 2,5 VA	V10626-A18L
220/240 V 50/60 Hz	**19L**	6 / 5 VA	V10626-A19L
22 mm Solenoid with plug interface "industrial standard"			
12 V DC	**12J**	2 W	QM/48/12J/21
24 V DC	**13J**	2 W	QM/48/13J/21
24 V 50/60 Hz	**14J**	4 / 2,5 VA	QM/48/14J/21
48 V 50/60 Hz	**16J**	4 / 2,5 VA	QM/48/16J/21
110/120 V 50/60 Hz	**18J**	4 / 2,5 VA	QM/48/18J/21
220/240 V 50/60 Hz	**19J**	6 / 5 VA	QM/48/19J/21

Technical data for solenoid variants 1 + 2:
Voltage tolerance: ±10%
Rating: 100% ED
Protection class: IP 65 with sealed plugs (ISO 6952)
Connection plugs must be ordered separately – see page 16

Solenoid variant 2

Voltage	Code	Power consump. Inrush / Hold	Manual override	Twin-Pilot cpl. (with solenoids) Type
Twin pilot with plug interface DIN EN 175 301-803 (DIN 43650 C) 4 pin				
24 V DC	13 A	2 W	Code 1	9031705 9000 024 00
			Code 2	9031704 9000 024 00
			Code 3	9031703 9000 024 00

Plug configuration, valve side / Twin pilot

Symbol	Plug no.	Function	Actuation
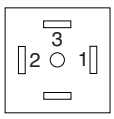	1	(+)	12 (Solenoid 2)
	2	(–)	12 + 14
	3	(+)	14 (Solenoid 1)

Code for manual override

Code	Manual override
1	without
2	push & lock
3	push only (not lockable)

Our policy is one of continued research and development. We therefore reserve the right to amend, without notice, the specifications given in this document.

Dimensional drawings

M01

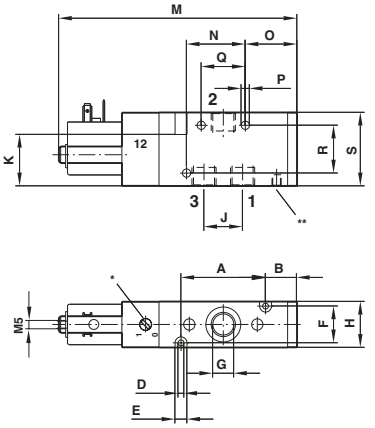

M02

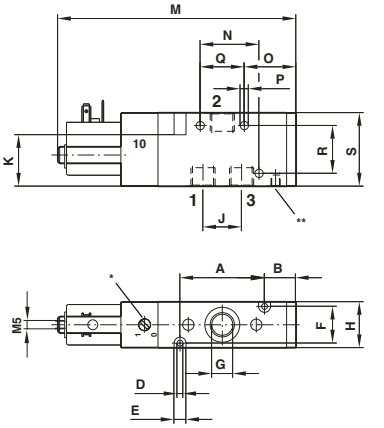

M03

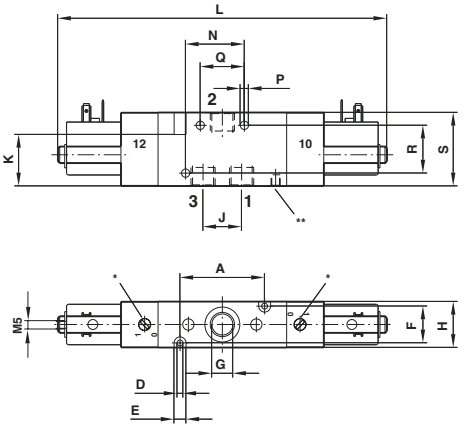

M04

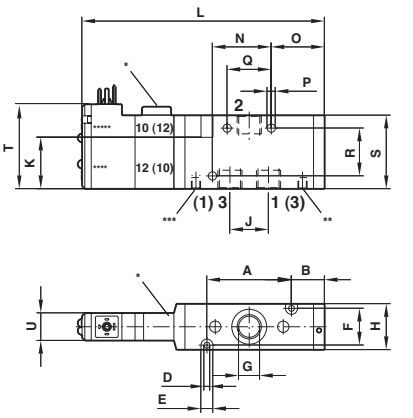

M05

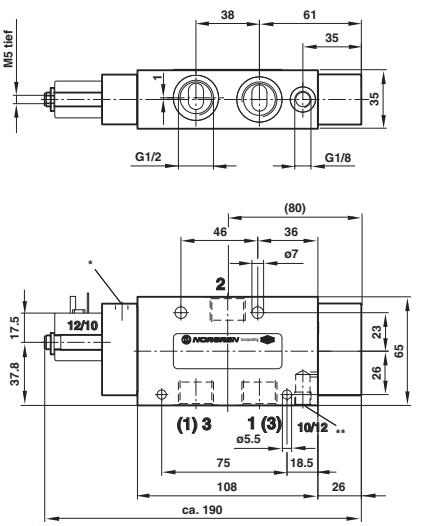

M06

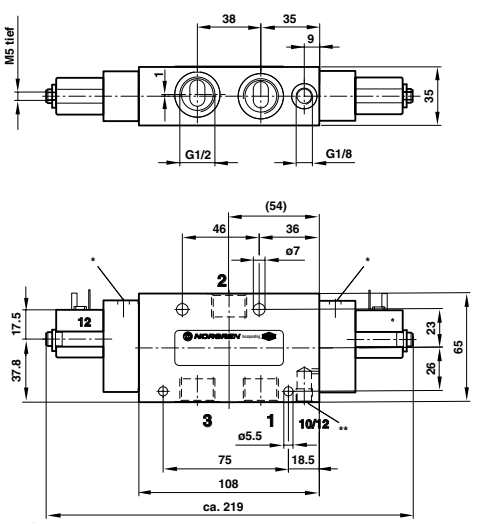

* Manual override
** External pilot supply (M5)
*** Collected pilot exhaust (M5)
**** Solenoid 1
***** Solenoid 2

	Type	A	B	C	D	E	F	G	H	J	K	L	M	N	O	P	Q	R	S	T	U
M01	V60	35	19,5	–	3,2	6,5	17	G1/8; 8 deep	22	16,2	28	–	117	25	28	4,5	18	26	35	–	–
	V61	46	20	–	3,2	6,5	20	G1/4; 10 deep	25	21	28	–	133	32	31	4,5	24	26	40	–	–
	V62	54	23,5	–	4,5	8	28	G3/8; 11,5 deep	34	24,4	44	–	147	12	38,5	4,5	26	36	55	–	–
M02	V60	35	19,5	–	3,2	6,5	17	G1/8; 8 deep	22	16,2	28	–	117	25	28	4,5	18	26	35	–	–
	V61	46	20	–	3,2	6,5	20	G1/4; 10 deep	25	21	28	–	132,5	32	31	4,5	24	26	40	–	–
	V62	54	23,5	–	4,5	8	28	G3/8; 11,5 deep	34	24,4	44	–	147	12	36,5	4,5	26	36	55	–	–
M03	V60	35	–	–	3,2	6,5	17	G1/8; 8 deep	22	16,2	28	160	–	25	–	4,5	18	26	35	–	–
	V61	46	–	–	3,2	6,5	20	G1/4; 10 deep	25	21	28	179	–	32	–	4,5	24	26	40	–	–
	V62	54	–	–	4,5	8	28	G3/8; 11,5 deep	34	24,4	44	194	–	12	–	4,5	26	36	55	–	–
M04	V60	35	19,5	–	3,2	6,5	17	G1/8; 8 deep	22	16,2	28	122	–	25	28	4,5	18	26	35	46	15
	V61	46	20	–	3,2	6,5	20	G1/4; 10 deep	25	21	28	134	–	32	31	4,5	24	26	40	46	15
	V62	54	23	–	4,5	8	28	G3/8; 11,5 deep	34	24,4	44	149	–	12	38	4,5	26	36	55	54	15

Our policy is one of continued research and development. We therefore reserve the right to amend, without notice, the specifications given in this document.

2 x 3/2 directional control valves, solenoid actuated

Symbol	Type	Size	Pilot supply	Pilot exhaust	Solenoid variant	Flow (l/min)	Operating pressure (bar)	Pilot pressure external (bar)	Weight (kg)	Dimensional drawing No.
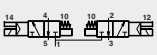 NC/NC	**V60AA11A-Ax*****	G 1/8	internal	not collected	1	500	2 ... 8	–	0,34	M07
	V60AA11D-Cx13A	G 1/8	internal	collected	2	500	2 ... 10	–	0,24	M08
	V61BA11A-Ax***	G 1/4	internal	not collected	1	950	2 ... 8	–	0,43	M07
	V61BA11D-Cx13A	G 1/4	internal	collected	2	950	2 ... 10	–	0,33	M08
	V62CA11A-Ax***	G 3/8	internal	not collected	1	1900	2 ... 8	–	0,73	M07
	V62CA11D-Cx13A	G 3/8	internal	collected	2	1900	2 ... 10	–	0,63	M08
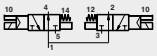 NO/NO	**V60AB11A-Ax*****	G 1/8	internal	not collected	1	500	2 ... 8	–	0,34	M07
	V60AB11D-Cx13A	G 1/8	internal	collected	2	500	2 ... 10	–	0,24	M08
	V61BB11A-Ax***	G 1/4	internal	not collected	1	950	2 ... 8	–	0,43	M07
	V61BB11D-Cx13A	G 1/4	internal	collected	2	950	2 ... 10	–	0,33	M08
	V62CB11A-Ax***	G 3/8	internal	not collected	1	1900	2 ... 8	–	0,73	M07
	V62CB11D-Cx13A	G 3/8	internal	collected	2	1900	2 ... 10	–	0,63	M08
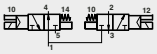 NO/NC	**V60AC11A-Ax*****	G 1/8	internal	not collected	1	500	2 ... 8	–	0,34	M07
	V60AC11D-Cx13A	G 1/8	internal	collected	2	500	2 ... 10	–	0,24	M08
	V61BC11A-Ax***	G 1/4	internal	not collected	1	950	2 ... 8	–	0,43	M07
	V61BC11D-Cx13A	G 1/4	internal	collected	2	950	2 ... 10	–	0,33	M08
	V62CC11A-Ax***	G 3/8	internal	not collected	1	1900	2 ... 8	–	0,73	M07
	V62CC11D-Cx13A	G 3/8	internal	collected	2	1900	2 ... 10	–	0,63	M08

x Insert code for manual override
*** Insert voltage code from table, or 000 for version without solenoid.

NC/NC = Both valves normally closed (port P)
NO/NO = Both valves normally open (port P)
NO/NC = 1 valve normally open, 1 valve normally closed (port P)

Selection of solenoid and voltage

Please insert **solenoid code** instead of *** under Valve type.

Solenoid variant 1 (solenoid rotates 4 x 90°)

Voltage	Code	Power consumption Inrush / Hold	Single solenoid Type
22 mm Solenoid with plug interface DIN EN 175 301-803 (DIN 43650 B)			
12 V DC	**12L**	2 W	V10626-A12L
24 V DC	**13L**	2 W	V10626-A13L
24 V 50/60 Hz	**14L**	4 / 2,5 VA	V10626-A14L
48 V 50/60 Hz	**16L**	4 / 2,5 VA	V10626-A16L
110/120 V 50/60 Hz	**18L**	4 / 2,5 VA	V10626-A18L
220/240 V 50/60 Hz	**19L**	6 / 5 VA	V10626-A19L
22 mm Solenoid with plug interface "industrial standard"			
12 V DC	**12J**	2 W	QM/48/12J/21
24 V DC	**13J**	2 W	QM/48/13J/21
24 V 50/60 Hz	**14J**	4 / 2,5 VA	QM/48/14J/21
48 V 50/60 Hz	**16J**	4 / 2,5 VA	QM/48/16J/21
110/120 V 50/60 Hz	**18J**	4 / 2,5 VA	QM/48/18J/21
220/240 V 50/60 Hz	**19J**	6 / 5 VA	QM/48/19J/21

Technical data for solenoid variants 1 + 2:
Voltage tolerance: ±10%
Rating: 100% ED
Protection class: IP 65 with sealed plugs (ISO 6952)
Connection plugs must be ordered separately – see page 16

Solenoid variant 2

Voltage	Code	Power consump. Inrush / Hold	Manual override	Twin-Pilot cpl. (with solenoids) Type
Twin pilot with plug interface DIN EN 175 301-803 (DIN 43650 C) 4 pin				
24 V DC	13 A	2 W	Code 1	9031705 9000 024 00
			Code 2	9031704 9000 024 00
			Code 3	9031703 9000 024 00

Plug configuration, valve side / Twin pilot

Symbol	Plug no.	Function	Actuation
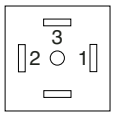	1	(+)	12 (Solenoid 2)
	2	(–)	12 + 14
	3	(+)	14 (Solenoid 1)

Code for manual override

Code	Manual override
1	without
2	push & lock
3	push only (not lockable)

Our policy is one of continued research and development. We therefore reserve the right to amend, without notice, the specifications given in this document.

Dimensional drawings

M07

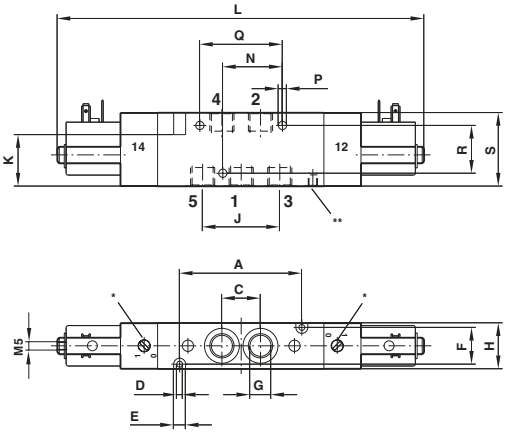

M08

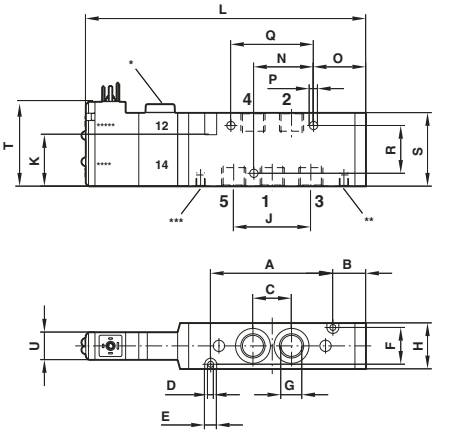

* Manual override
** External pilot supply (M5)
*** Collected pilot exhaust (M5)
**** Solenoid 1
***** Solenoid 2

	Type	A	B	C	D	E	F	G	H	J	K	L	M	N	O	P	Q	R	S	T	U
M07	V60	50	–	16,2	3,2	6,5	17	G1/8; 8 deep	22	32,4	28	175	–	25	–	4,5	33,6	26	35	–	–
	V61	66	–	21	3,2	6,5	20	G1/4;10 deep	25	42	28	199	–	32	–	4,5	44	26	40	–	–
	V62	78	–	24,4	4,5	8	28	G3/8; 11,5 deep	34	48,8	44	218	–	12	–	4,5	26	36	55	–	–
M08	V60	50	19,5	16,2	3,2	6,5	17	G1/8; 8 deep	22	32,4	28	136,5	–	25	28	4,5	33,6	26	35	46	15
	V61	66	20	21	3,2	6,5	20	G1/4; 10 deep	25	42	28	154	–	32	31	4,5	44	26	40	46	15
	V62	78	23,5	24,4	4,5	8	28	G3/8; 11,5 deep	34	48,8	44	177,5	–	12	62,5	4,5	26	36	55	54	15

Our policy is one of continued research and development. We therefore reserve the right to amend, without notice, the specifications given in this document.

5/2 directional control valves, solenoid actuated

Symbol	Type	Size	Pilot supply	Pilot exhaust	Solenoid variant	Flow (l/min)	Operating pressure (bar)	Pilot pressure external (bar)	Weight (kg)	Dimensional drawing No.
	**V60A513A-Ax*****	G 1/8	internal	not collected	1	750	2 ... 8	–	0,24	M09
	V60A523A-Ax***	G 1/8	external	not collected	1	750	-0,9 ... 8	3 ... 8	0,24	M09
	V60A513D-Cx13A	G 1/8	internal	collected	2	750	2 ... 10	–	0,23	M11
	V60A523D-Cx13A	G 1/8	external	collected	2	750	-0,9 ... 10	3 ... 10	0,23	M11
	V61B513A-Ax***	G 1/4	internal	not collected	1	1300	2 ... 8	–	0,33	M09
	V61B523A-Ax***	G 1/4	external	not collected	1	1300	-0,9 ... 8	3 ... 8	0,33	M09
	V61B513D-Cx13A	G 1/4	internal	collected	2	1300	2 ... 10	–	0,32	M11
	V61B523D-Cx13A	G 1/4	external	collected	2	1300	-0,9 ... 10	3 ... 10	0,32	M11
	V62C513A-Ax***	G 3/8	internal	not collected	1	2600	2 ... 8	–	0,62	M09
	V62C523A-Ax***	G 3/8	external	not collected	1	2600	-0,9 ... 8	3 ... 8	0,62	M09
	V62C513D-Cx13A	G 3/8	internal	collected	2	2600	2 ... 10	–	0,61	M11
	V62C523D-Cx13A	G 3/8	external	collected	2	2600	-0,9 ... 10	3 ... 10	0,61	M11
	V63D513A-Ax***	G 1/2	internal	not collected	1	4200	2 ... 8	–	0,96	M12
	V63D523A-Ax***	G 1/2	external	not collected	1	4200	-0,9 ... 8	3 ... 8	0,96	M12
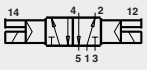	**V60A511A-Ax*****	G 1/8	internal	not collected	1	750	1,5 ... 8	–	0,33	M10
	V60A522A-Ax***	G 1/8	external	not collected	1	750	-0,9 ... 8	3 ... 8	0,33	M10
	V60A511D-Cx13A	G 1/8	internal	collected	2	750	1,5 ... 10	–	0,23	M11
	V60A522D-Cx13A	G 1/8	external	collected	2	750	-0,9 ... 10	3 ... 10	0,23	M11
	V61B511A-Ax***	G 1/4	internal	not collected	1	1300	1,5 ... 8	–	0,42	M10
	V61B522A-Ax***	G 1/4	external	not collected	1	1300	-0,9 ... 8	3 ... 8	0,42	M10
	V61B511D-Cx13A	G 1/4	internal	collected	2	300	1,5 ... 10	–	0,32	M11
	V61B522D-Cx13A	G 1/4	external	collected	2	300	-0,9 ... 10	3 ... 10	0,32	M11
	V62C511A-Ax***	G 3/8	internal	not collected	1	2600	1,5 ... 8	–	0,72	M10
	V62C522A-Ax***	G 3/8	external	not collected	1	2600	-0,9 ... 8	3 ... 8	0,72	M10
	V62C511D-Cx13A	G 3/8	internal	collected	2	2600	1,5 ... 10	–	0,62	M11
	V62C522D-Cx13A	G 3/8	external	collected	2	2600	-0,9 ... 10	3 ... 10	0,62	M11
	V63D511A-Ax***	G 1/2	internal	not collected	1	4200	2 ... 8	–	0,98	M13

x Insert code for manual override
*** Insert voltage code from table, or 000 for version without solenoid.

Selection of solenoid and voltage

Please insert **solenoid code** instead of *** under Valve type.

Solenoid variant 1 (solenoid rotates 4 x 90°)

Voltage	Code	Power consumption Inrush / Hold	Single solenoid Type
22 mm Solenoid with plug interface DIN EN 175 301-803 (DIN 43650 B)			
12 V DC	**12L**	2 W	V10626-A12L
24 V DC	**13L**	2 W	V10626-A13L
24 V 50/60 Hz	**14L**	4 / 2,5 VA	V10626-A14L
48 V 50/60 Hz	**16L**	4 / 2,5 VA	V10626-A16L
110/120 V 50/60 Hz	**18L**	4 / 2,5 VA	V10626-A18L
220/240 V 50/60 Hz	**19L**	6 / 5 VA	V10626-A19L
22 mm Solenoid with plug interface "industrial standard"			
12 V DC	**12J**	2 W	QM/48/12J/21
24 V DC	**13J**	2 W	QM/48/13J/21
24 V 50/60 Hz	**14J**	4 / 2,5 VA	QM/48/14J/21
48 V 50/60 Hz	**16J**	4 / 2,5 VA	QM/48/16J/21
110/120 V 50/60 Hz	**18J**	4 / 2,5 VA	QM/48/18J/21
220/240 V 50/60 Hz	**19J**	6 / 5 VA	QM/48/19J/21

Technical data for solenoid variants 1 + 2:
Voltage tolerance: ±10%
Rating: 100% ED
Protection class: IP 65 with sealed plugs (ISO 6952)
Connection plugs must be ordered separately – see page 16

Solenoid variant 2

Voltage	Code	Power consump. Inrush / Hold	Manual override	Twin-Pilot cpl. (with solenoids) Type
Twin pilot with plug interface DIN EN 175 301-803 (DIN 43650 C) 4 pin				
24 V DC	13 A	2 W	Code 1	9031705 9000 024 00
			Code 2	9031704 9000 024 00
			Code 3	9031703 9000 024 00

Plug configuration, valve side / Twin pilot

Symbol	Plug no.	Function	Actuation
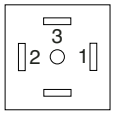	1	(+)	12 (Solenoid 2)
	2	(–)	12 + 14
	3	(+)	14 (Solenoid 1)

Code for manual override

Code	Manual override
1	without
2	push & lock
3	push only (not lockable)

Our policy is one of continued research and development. We therefore reserve the right to amend, without notice, the specifications given in this document.

Dimensional drawings

M09

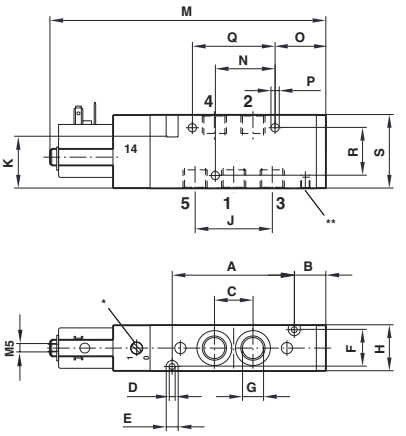

M10

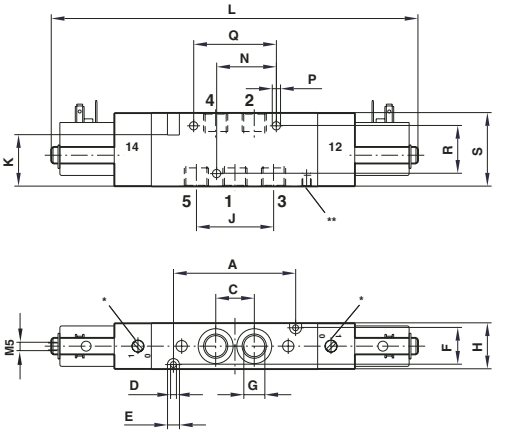

M11

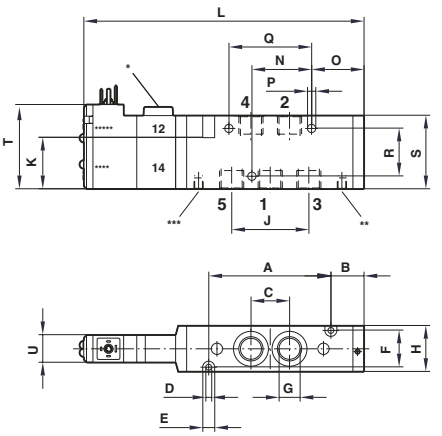

M12

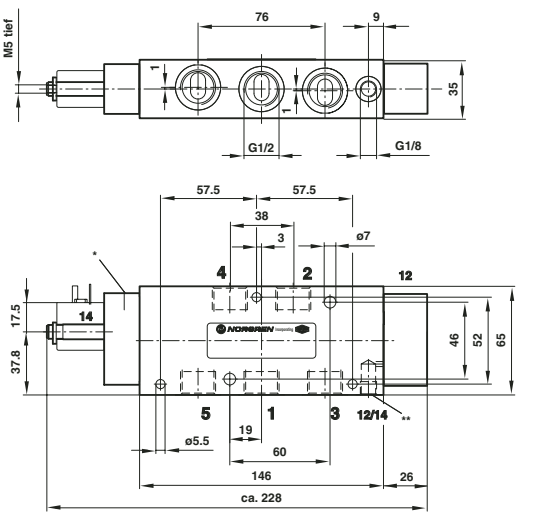

M13

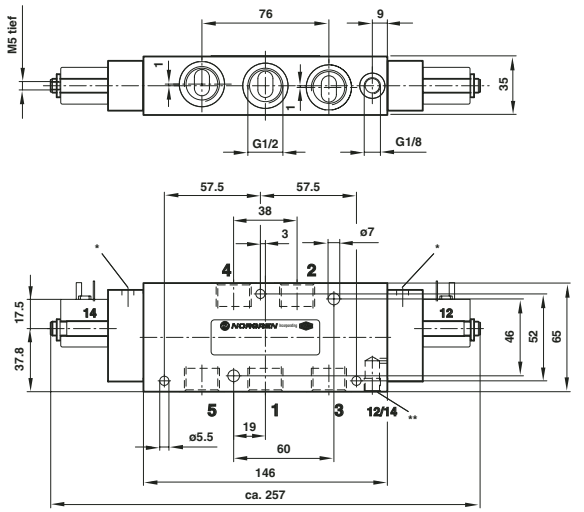

* Manual override
** External pilot supply (M5)
*** Collected pilot exhaust (M5)
**** Solenoid 1
***** Solenoid 2

	Type	A	B	C	D	E	F	G	H	J	K	L	M	N	O	P	Q	R	S	T	U
M09	V60	50	19,5	16,2	3,2	6,5	17	G1/8; 8 deep	22	32,4	28	–	132	25	28	4,5	33,6	26	35	–	–
	V61	66	20	21	3,2	6,5	20	G1/4; 10 deep	25	42	28	–	153	32	31	4,5	44	26	40	–	–
	V62	78	23,5	24,4	4,5	8	28	G3/8; 11,5 deep	34	48,8	44	–	171,5	12	62,5	4,5	26	36	55	–	–
M10	V60	50	–	16,2	3,2	6,5	17	G1/8; 8 deep	22	32,4	28	175	–	25	–	4,5	33,6	26	35	–	–
	V61	66	–	21	3,2	6,5	20	G1/4; 10 deep	25	42	28	199	–	32	–	4,5	44	26	40	–	–
	V62	78	–	24,4	4,5	8	28	G3/8; 11,5 deep	34	48,8	44	218	–	12	–	4,5	26	36	55	–	–
M11	V60	50	17	16,2	3,2	6,5	17	G1/8; 8 deep	22	32,4	28	134	–	25	25	4,5	33,6	26	35	46	15
	V61	66	18	21	3,2	6,5	20	G1/4; 10 deep	25	42	28	153	–	32	29	4,5	44	26	40	46	15
	V62	78	22	24,4	4,5	8	28	G3/8; 11,5 deep	34	48,8	44	172	–	12	61	4,5	26	36	55	54	15

Our policy is one of continued research and development. We therefore reserve the right to amend, without notice, the specifications given in this document.

5/3 directional control valves, solenoid actuated

Symbol	Type	Size	Pilot supply	Pilot exhaust	Solenoid variant	Flow (l/min)	Operating pressure (bar)	Pilot pressure external (bar)	Weight (kg)	Dimensional drawing No.
 APB	**V60A611A-Ax*****	G 1/8	internal	not collected	1	500	3 ... 8	–	0,35	M14
	V60A622A-Ax***	G 1/8	external	not collected	1	500	-0,9 ... 8	3 ... 8	035	M14
	V60A611D-Cx13A	G 1/8	internal	collected	2	500	3 ... 10	–	0,25	M15
	V60A622D-Cx13A	G 1/8	external	collected	2	500	-0,9 ... 10	3 ... 10	0,25	M15
	V61B611A-Ax***	G 1/4	internal	not collected	1	950	3 ... 8	–	0,47	M14
	V61B622A-Ax***	G 1/4	external	not collected	1	950	-0,9 ... 8	3 ... 8	0,47	M14
	V61B611D-Cx13A	G 1/4	internal	collected	2	950	3 ... 10	–	0,37	M15
	V61B622D-Cx13A	G 1/4	external	collected	2	950	-0,9 ... 10	3 ... 10	0,37	M15
	V62C611A-Ax***	G 3/8	internal	not collected	1	1900	3 ... 8	–	0,81	M14
	V62C622A-Ax***	G 3/8	external	not collected	1	1900	-0,9 ... 8	3 ... 8	0,81	M14
	V62C611D-Cx13A	G 3/8	internal	collected	2	1900	3 ... 10	–	0,71	M15
	V62C622D-Cx13A	G 3/8	external	collected	2	1900	-0,9 ... 10	3 ... 10	0,71	M15
 COE	**V60A711A-Ax*****	G 1/8	internal	not collected	1	500	3 ... 8	–	0,35	M14
	V60A722A-Ax***	G 1/8	external	not collected	1	500	-0,9 ... 8	3 ... 8	0,35	M14
	V60A711D-Cx13A	G 1/8	internal	collected	2	500	3 ... 10	–	0,25	M15
	V60A722D-Cx13A	G 1/8	external	collected	2	500	-0,9 ... 10	3 ... 10	0,25	M15
	V61B711A-Ax***	G 1/4	internal	not collected	1	950	3 ... 8	–	0,47	M14
	V61B722A-Ax***	G 1/4	external	not collected	1	950	-0,9 ... 8	3 ... 8	0,47	M14
	V61B711D-Cx13A	G 1/4	internal	collected	2	950	3 ... 10	–	0,37	M15
	V61B722D-Cx13A	G 1/4	external	collected	2	950	-0,9 ... 10	3 ... 10	0,37	M15
	V62C711A-Ax***	G 3/8	internal	not collected	1	1900	3 ... 8	–	0,81	M14
	V62C722A-Ax***	G 3/8	external	not collected	1	1900	-0,9 ... 8	3 ... 8	0,81	M14
	V62C711D-Cx13A	G 3/8	internal	collected	2	1900	3 ... 10	–	0,71	M15
	V62C722D-Cx13A	G 3/8	external	collected	2	1900	-0,9 ... 10	3 ... 10	0,71	M15
 COP	**V60A811A-Ax*****	G 1/8	internal	not collected	1	500	3 ... 8	–	0,35	M14
	V60A822A-Ax***	G 1/8	external	not collected	1	500	-0,9 ... 8	3 ... 8	0,35	M14
	V60A811D-Cx13A	G 1/8	internal	collected	2	500	3 ... 10	–	0,25	M15
	V60A822D-Cx13A	G 1/8	external	collected	2	500	-0,9 ... 10	3 ... 10	0,25	M15
	V61B811A-Ax***	G 1/4	internal	not collected	1	950	3 ... 8	–	0,47	M14
	V61B822A-Ax***	G 1/4	external	not collected	1	950	-0,9 ... 8	3 ... 8	0,47	M14
	V61B811D-Cx13A	G 1/4	internal	collected	2	950	3 ... 10	–	0,37	M15
	V61B822D-Cx13A	G 1/4	external	collected	2	950	-0,9 ... 10	3 ... 10	0,37	M15
	V62C811A-Ax***	G 3/8	internal	not collected	1	1900	3 ... 8	–	0,81	M14
	V62C822A-Ax***	G 3/8	external	not collected	1	1900	-0,9 ... 8	3 ... 8	0,81	M14
	V62C811D-Cx13A	G 3/8	internal	collected	2	1900	3 ... 10	–	0,71	M15
	V62C822D-Cx13A	G 3/8	external	collected	2	1900	-0,9 ... 10	3 ... 10	0,71	M15

x Insert code for manual override
*** Insert voltage code from table, or 000 for version without solenoid.

APB = All ports blocked
COE = Centre open exhaust
COP = Centre open pressure

Selection of solenoid and voltage

Please insert **solenoid code** instead of *** under Valve type.

Solenoid variant 1 (solenoid rotates 4 x 90°)

Voltage	Code	Power consumption Inrush / Hold	Single solenoid Type
22 mm Solenoid with plug interface DIN EN 175 301-803 (DIN 43650 B)			
12 V DC	**12L**	2 W	V10626-A12L
24 V DC	**13L**	2 W	V10626-A13L
24 V 50/60 Hz	**14L**	4 / 2,5 VA	V10626-A14L
48 V 50/60 Hz	**16L**	4 / 2,5 VA	V10626-A16L
110/120 V 50/60 Hz	**18L**	4 / 2,5 VA	V10626-A18L
220/240 V 50/60 Hz	**19L**	6 / 5 VA	V10626-A19L
22 mm Solenoid with plug interface "industrial standard"			
12 V DC	**12J**	2 W	QM/48/12J/21
24 V DC	**13J**	2 W	QM/48/13J/21
24 V 50/60 Hz	**14J**	4 / 2,5 VA	QM/48/14J/21
48 V 50/60 Hz	**16J**	4 / 2,5 VA	QM/48/16J/21
110/120 V 50/60 Hz	**18J**	4 / 2,5 VA	QM/48/18J/21
220/240 V 50/60 Hz	**19J**	6 / 5 VA	QM/48/19J/21

Technical data for solenoid variants 1 + 2:
Voltage tolerance: ±10%
Rating: 100% ED
Protection class: IP 65 with sealed plugs (ISO 6952)
Connection plugs must be ordered separately – see page 16

Solenoid variant 2

Voltage	Code	Power consump. Inrush / Hold	Manual override	Twin-Pilot cpl. (with solenoids) Type
Twin pilot with plug interface DIN EN 175 301-803 (DIN 43650 C) 4 pin				
24 V DC	13 A	2 W	Code 1	9031705 9000 024 00
			Code 2	9031704 9000 024 00
			Code 3	9031703 9000 024 00

Plug configuration, valve side / Twin pilot

Symbol	Plug no.	Function	Actuation
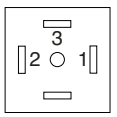	1	(+)	12 (Solenoid 2)
	2	(–)	12 + 14
	3	(+)	14 (Solenoid 1)

Code for manual override

Code	Manual override
1	without
2	push & lock
3	push only (not lockable)

Our policy is one of continued research and development. We therefore reserve the right to amend, without notice, the specifications given in this document.

Dimensional drawings

M14

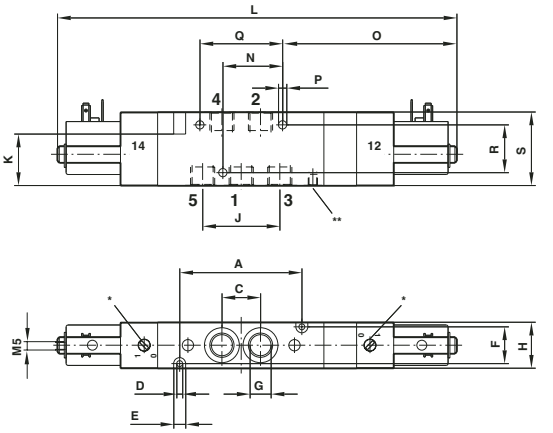

M15

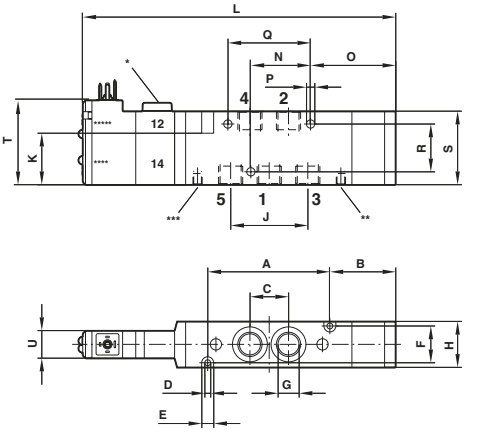

* Manual override
** External pilot supply (M5)
*** Collected pilot exhaust (M5)
**** Solenoid 1
***** Solenoid 2

	Type	A	B	C	D	E	F	G	H	J	K	L	M	N	O	P	Q	R	S	T	U
M14	V60	50	–	16,2	3,2	6,5	17	G1/8; 8 deep	22	32,4	28	189	–	25	84,5	4,5	33,6	26	35	–	–
	V61	66	–	21	3,2	6,5	20	G1/4; 10 deep	25	42	28	217	–	32		4,5	44	26	40	–	–
	V62	78	–	24,4	4,5	8	28	G3/8; 11,5 deep	34	48,8	44	241	–	12	132	4,5	26	36	55	–	–
M15	V60	50	31	16,2	3,2	6,5	17	G1/8; 8 deep	22	32,4	28	148	–	25	39	4,5	33,6	26	35	46	15
	V61	66	36,5	21	3,2	6,5	20	G1/4; 10 deep	25	42	28	171	–	32	47,5	4,5	44	26	40	46	15
	V62	78	44,5	24,4	4,5	8	28	G3/8; 11,5 deep	34	48,8	44	195	–	12	84	4,5	26	36	55	54	15

Our policy is one of continued research and development. We therefore reserve the right to amend, without notice, the specifications given in this document.

3/2 directional control valves, pilot actuated

Symbol	Type	Size	Operator 12	Operator 10	Flow (l/min)	Operating pressure (bar)	Pilot pressure external (bar)	Weight (kg)	Dimensional drawing No.
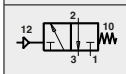	**V60A4D7A-XA090**	G 1/8	Air	Spring	750	-0,9 ... 10	2,5 ... 10	0,13	M16
	V61B4D7A-XA090	G 1/4	Air	Spring	1300	-0,9 ... 10	2,5 ... 10	0,21	M16
	V62C4D7A-XA090	G 3/8	Air	Spring	2600	-0,9 ... 10	2,5 ... 10	0,43	M16
	V63D4D7A-XA090	G 1/2	Air	Spring	4200	-0,9 ... 10	2,5 ... 10	0,75	M20
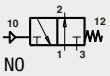 NO	**V60A3D7A-XA090**	G 1/8	Spring	Air	750	-0,9 ... 10	2,5 ... 10	0,13	M17
	V61B3D7A-XA090	G 1/4	Spring	Air	1300	-0,9 ... 10	2,5 ... 10	0,21	M17
	V62C3D7A-XA090	G 3/8	Spring	Air	2600	-0,9 ... 10	2,5 ... 10	0,43	M17
	V63D3D7A-XA090	G 1/2	Spring	Air	4200	-0,9 ... 10	2,5 ... 10	0,75	M34
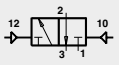	**V60A4DDA-XA020**	G 1/8	Air	Air	750	-0,9 ... 10	1,5 ... 10	0,13	M18
	V61B4DDA-XA020	G 1/4	Air	Air	1300	-0,9 ... 10	1,5 ... 10	0,21	M18
	V62C4DDA-XA020	G 3/8	Air	Air	2600	-0,9 ... 10	1,5 ... 10	0,43	M18
	V63D4DDA-XA020	G 1/2	Air	Air	4200	-0,9 ... 10	1,5 ... 10	0,68	M21

NC = Normally closed
NO = Normally open

2 x 3/2 directional control valves, pilot actuated

Symbol	Type	Size	Operator 12	Operator 10	Flow (l/min)	Operating pressure (bar)	Pilot pressure external (bar)	Weight (kg)	Dimensional drawing No.
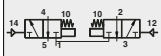	**V60AADDA-XA020**	G 1/8	14 Air	12 Air	500	2 ... 10	2 ... 10	0,18	M19
	V61BADDA-XA020	G 1/4	14 Air	12 Air	950	2 ... 10	2 ... 10	0,28	M19
	V62CADDA-XA020	G 3/8	14 Air	12 Air	1900	2 ... 10	2 ... 10	0,60	M19
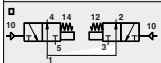 NO/NO	**V60ABDDA-XA020**	G 1/8	10 Air	10 Air	500	2 ... 10	2 ... 10	0,18	M19
	V61BBDDA-XA020	G 1/4	10 Air	10 Air	950	2 ... 10	2 ... 10	0,28	M19
	V62CBDDA-XA020	G 3/8	10 Air	10 Air	1900	2 ... 10	2 ... 10	0,60	M19
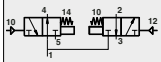 NO/NC	**V60ACDDA-XA020**	G 1/8	10 Air	12 Air	500	2 ... 10	2 ... 10	0,18	M19
	V61BCDDA-XA020	G 1/4	10 Air	12 Air	950	2 ... 10	2 ... 10	0,28	M19
	V62CCDDA-XA020	G 3/8	10 Air	12 Air	1900	2 ... 10	2 ... 10	0,60	M19

Hint: Internal switching in middle position via spring.

NC/NC = Both valves normally closed (port P)
NO/NO = Both valves normally open (port P)
NO/NC = 1 valve normally open, 1 valve normally closed (port P)

Our policy is one of continued research and development. We therefore reserve the right to amend, without notice, the specifications given in this document.

Dimensional drawings

M16

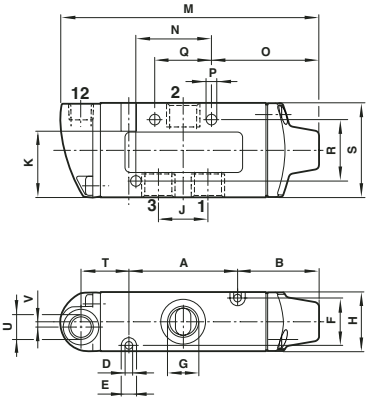

M17

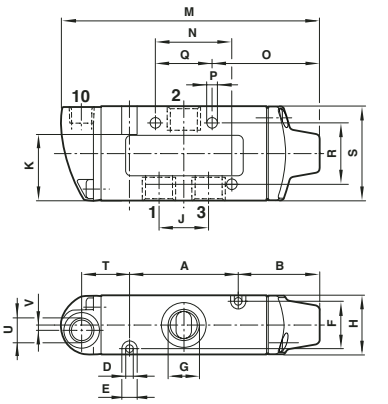

M18

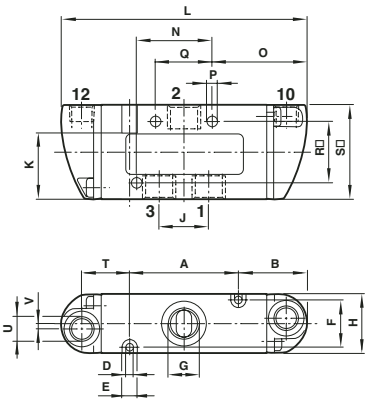

M19

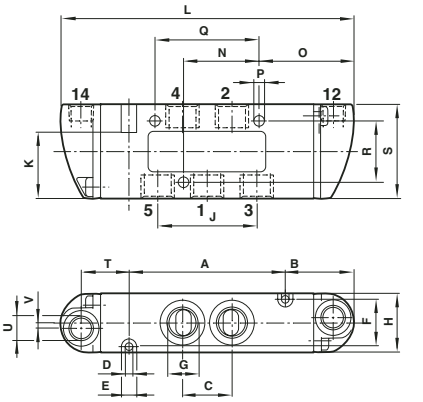

M20

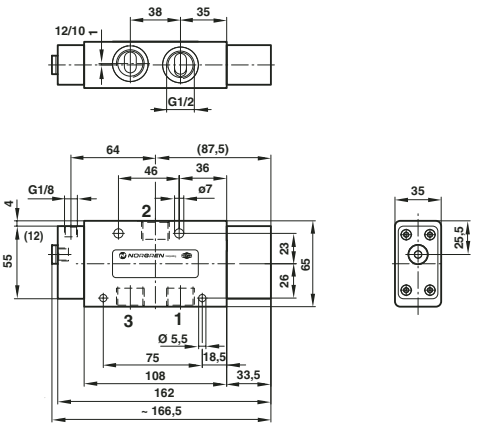

M21

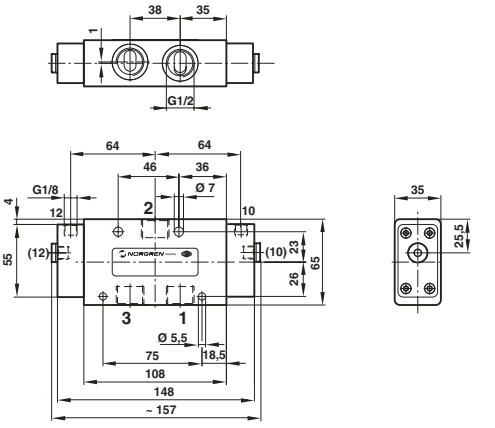

Drawing no.	Type	A	B	C	D	E	F	G	H	J	K	L	M	N	O	P	Q	R	S	T	U
16	V60	35	27,4	–	3,2	6,5	17	G1/8; 8 deep	22	16,2	28	–	90	25	35,9	4,5	18	26	35	18,6	G1/8
16	V61	46	34,5	–	3,2	6,5	20	G1/4; 10 deep	25	21	28	–	110	32	45,5	4,5	24	26	40	20,2	G1/8
16	V62	54	43	–	4,5	8	28	G3/8; 11,5 deep	34	24,4	44	–	124	12	58	4,5	26	36	55	21	G1/8
17	V60	35	27,4	–	3,2	6,5	17	G1/8; 8 deep	22	16,2	28	–	90	25	35,9	4,5	18	26	35	18,6	G1/8
17	V61	46	34,5	–	3,2	6,5	20	G1/4; 10 deep	25	21	28	–	110	32	45,5	4,5	24	26	40	20,2	G1/8
17	V62	54	43	–	4,5	8	28	G3/8; 11,5 deep	34	24,4	44	–	124	12	56	4,5	26	36	55	21	G1/8
18	V60	35	27,4	–	3,2	6,5	17	G1/8; 8 deep	22	16,2	28	89	–	25	35,6	4,5	18	26	35	18,6	G1/8
18	V61	46	29	–	3,2	6,5	20	G1/4; 10 deep	25	21	28	104	–	32	40	4,5	24	26	40	20,2	G1/8
18	V62	54	27	–	4,5	8	28	G3/8; 11,5 deep	34	24,4	44	108	–	12	42	4,5	26	36	55	21	G1/8
19	V60	50	27,3	16,2	3,2	6,5	17	G1/8; 8 deep	22	32,4	28	104,5	–	25	35,5	4,5	33,6	26	35	18,7	G1/8
19	V61	66	29	21	3,2	6,5	20	G1/4; 10 deep	25	42	28	124	–	32	40	4,5	44	26	40	20,2	G1/8
19	V62	78	27	24,4	4,5	8	28	G3/8; 11,5 deep	34	48,8	44	132	–	12	66	4,5	26	36	55	21	G1/8

Our policy is one of continued research and development. We therefore reserve the right to amend, without notice, the specifications given in this document.

Valve choice

5/2 directional control valves, pilot actuated

Symbol	Type	Size	Operator 14	Operator 12	Flow (l/min)	Operating pressure (bar)	Pilot pressure external (bar)	Weight (kg)	Dimensional drawing No.
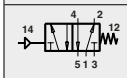	**V60A5D7A-XA090**	G 1/8	Air	Spring	750	-0,9 ... 10	2,5 ... 10	0,16	M22
	V61B5D7A-XA090	G 1/4	Air	Spring	1300	-0,9 ... 10	2,5 ... 10	0,26	M22
	V62C5D7A-XA090	G 3/8	Air	Spring	2600	-0,9 ... 10	2,5 ... 10	0,56	M22
	V63D5D7A-XA090	G 1/2	Air	Spring	4200	-0,9 ... 10	2,5 ... 10	0,92	M25
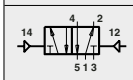	**V60A5DDA-XA020**	G 1/8	Air	Air	750	-0,9 ... 10	1,5 ... 10	0,17	M19
	V61B5DDA-XA020	G 1/4	Air	Air	1300	-0,9 ... 10	1,5 ... 10	0,27	M19
	V62C5DDA-XA020	G 3/8	Air	Air	2600	-0,9 ... 10	1,5 ... 10	0,58	M23
	V63D5DDA-XA020	G 1/2	Air	Air	4200	-0,9 ... 10	1,5 ... 10	0,87	M26

5/3 directional control valves, pilot actuated

Symbol	Type	Size	Operator 14	Operator 12	Flow (l/min)	Operating pressure (bar)	Pilot pressure external (bar)	Weight (kg)	Dimensional drawing No.
	**V60A6DDA-XA020**	G 1/8	Air	Air	500	-0,9 ... 10	3 ... 10	0,20	M24
	V61B6DDA-XA020	G 1/4	Air	Air	950	-0,9 ... 10	3 ... 10	0,32	M24
	V62C6DDA-XA020	G 3/8	Air	Air	1900	-0,9 ... 10	3 ... 10	0,67	M24
APB	**V63D6DDA-XA020**	G 1/2	Air	Air	2200	-0,9 ... 10	3 ... 10	1,16	M35
	**V60A7DDA-XA020**	G 1/8	Air	Air	500	-0,9 ... 10	3 ... 10	0,20	M24
	V61B7DDA-XA020	G 1/4	Air	Air	950	-0,9 ... 10	3 ... 10	0,32	M24
	V62C7DDA-XA020	G 3/8	Air	Air	1900	-0,9 ... 10	3 ... 10	0,67	M24
COE	**V63D7DDA-XA020**	G 1/2	Air	Air	2200	-0,9 ... 10	3 ... 10	1,16	M35
	**V60A8DDA-XA020**	G 1/8	Air	Air	500	-0,9 ... 10	3 ... 10	0,20	M24
	V61B8DDA-XA020	G 1/4	Air	Air	950	-0,9 ... 10	3 ... 10	0,32	M24
COP	**V62C8DDA-XA020**	G 3/8	Air	Air	1900	-0,9 ... 10	3 ... 10	0,67	M24

Hint: Reversal switching in middle position via spring.

APB = All ports blocked
COE = Centre open exhaust
COP = Centre open pressure

Our policy is one of continued research and development. We therefore reserve the right to amend, without notice, the specifications given in this document.

Dimensional drawings

M22

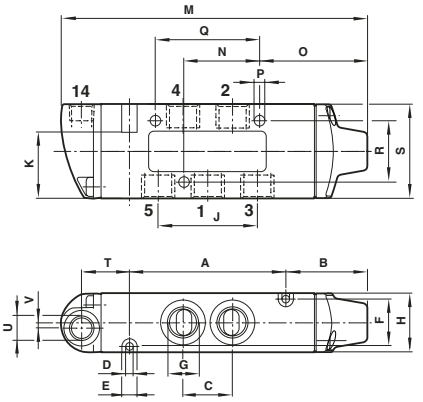

M23

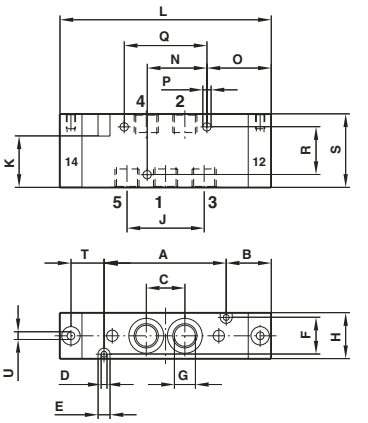

M24

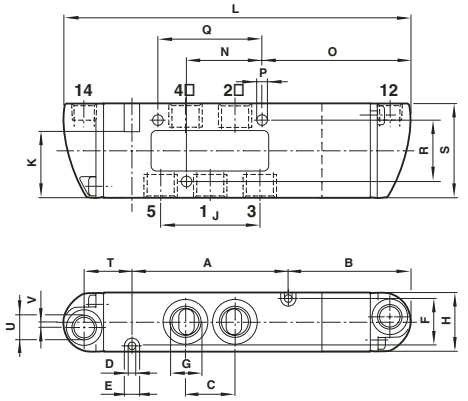

M25

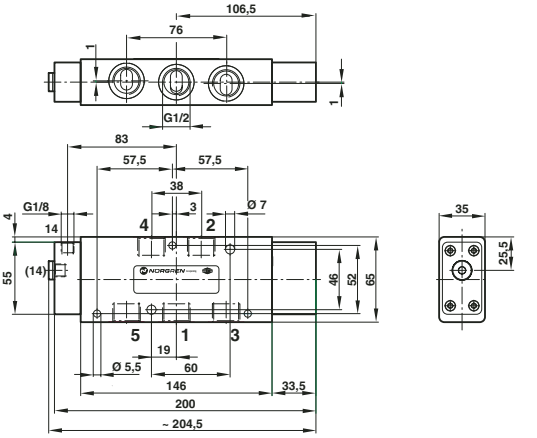

M26

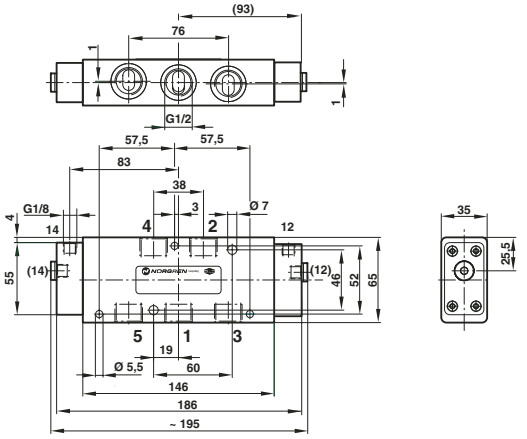

M35

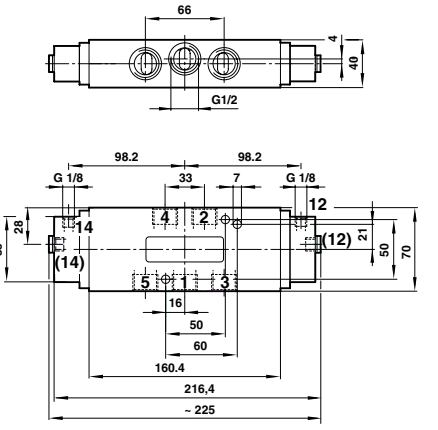

Drawing no.	Type	A	B	C	D	E	F	G	H	J	K	L	M	N	O	P	Q	R	S	T	U
22	V60	50	27,5	16,2	3,2	6,5	17	G1/8; 8 deep	22	32,4	28	–	105	25	35,7	4,5	44	26	35	18,7	G1/8
22	V61	66	34,5	21	3,2	6,5	20	G1/4; 10 deep	25	42	28	–	130	32	45,5	4,5	26	26	40	20,2	G1/8
22	V62	78	43	24,4	4,5	8	28	G3/8; 11,5 deep	34	48,8	44	–	148	12	82	4,5	33,6	36	55	21	G1/8
23	V60	50	27,3	16,2	3,2	6,5	17	G1/8; 8 deep	22	32,4	28	104,5	–	25	35,5	4,5	44	26	35	18,7	G1/8
23	V61	66	29	21	3,2	6,5	20	G1/4; 10 deep	25	42	28	124	–	32	40	4,5	26	26	40	20,2	G1/8
23	V62	78	27	24,4	4,5	8	28	G3/8; 11,5 deep	34	48,8	44	132	–	12	66	4,5	33,6	36	55	21	G1/8
24	V60	50	41,3	16,2	3,2	6,5	17	G1/8; 8 deep	22	32,4	28	118,5	–	25	49,5	4,5	44	26	35	18,7	G1/8
24	V61	66	52	21	3,2	6,5	20	G1/4; 10 deep	25	42	28	147	–	32	63	4,5	26	26	40	20,2	G1/8
24	V62	78	49,5	24,4	4,5	8	28	G3/8; 11,5 deep	34	48,8	44	154,5	–	12	88,5	4,5	33,6	36	55	21	G1/8

Our policy is one of continued research and development. We therefore reserve the right to amend, without notice, the specifications given in this document.

Manifold System

Manifold plate

Valve ports	V60		V61		V62	
	Type	Weight (kg)	Type	Weight (kg)	Type	Weight (kg)
2	2221002 0000 000 00	0,23	2221102 0000 000 00	0,28	2221202 0000 000 00	0,50
3	2221003 0000 000 00	0,28	2221103 0000 000 00	0,45	2221203 0000 000 00	0,85
4	2221004 0000 000 00	0,61	2221104 0000 000 00	0,72	2221204 0000 000 00	1,25
6	2221006 0000 000 00	0,86	2221106 0000 000 00	1,02	2221206 0000 000 00	1,79
8	2221008 0000 000 00	1,11	2221108 0000 000 00	1,32	2221208 0000 000 00	2,33
10	2221010 0000 000 00	1,36	2221110 0000 000 00	1,62	2221210 0000 000 00	2,87
12	2221012 0000 000 00	1,61	2221112 0000 000 00	1,92	2221212 0000 000 00	3,41
14	2221014 0000 000 00	1,86	2221114 0000 000 00	2,22	2221214 0000 000 00	3,95
16	2221016 0000 000 00	2,11	2221116 0000 000 00	2,52	2221216 0000 000 00	4,49
18	2221018 0000 000 00	2,36	2221118 0000 000 00	2,82	2221218 0000 000 00	5,03
20	2221020 0000 000 00	2,61	2221120 0000 000 00	3,12	2221220 0000 000 00	5,57

Dimensional drawings

Manifold plate 2 stations + 3 stations

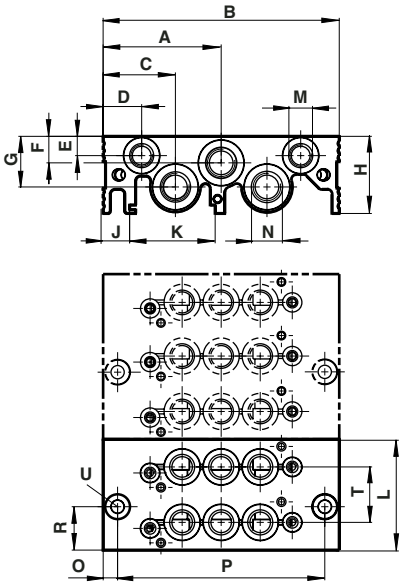

Manifold plate 4 stations – 20 stations

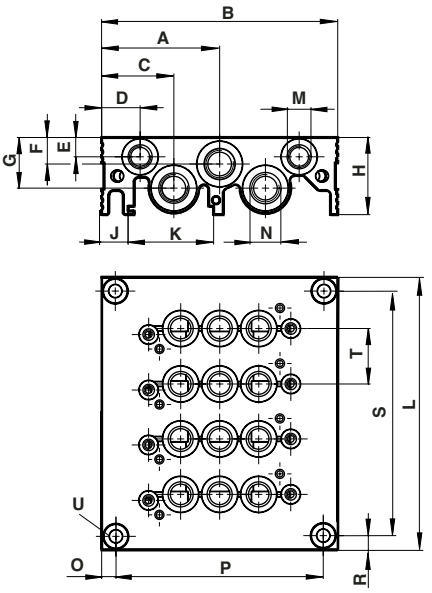

Dimensional table

Type		A	B	C	D	E	F	G	H	J	K	L	M	N	O	P	R	S	T	U
V60	2 stations	49	98	30	16	8	11	21	32	11	35,5	46	G 1/8	G 1/4	6	86	28	–	23	for M5
	3 stations	49	98	30	16	8	11	21	32	11	35,5	69	G 1/8	G 1/4	6	86	28	–	23	for M5
	4-20 stations	49	98	30	16	8	11	21	32	11	35,5	(x·23)+23	G 1/8	G 1/4	6	86	6,5	(x·23)+10	23	for M5
V61	2 stations	52	104	26	9	8	13	20	33	10	35,5	52	G 1/8	G 3/8	40	24	26	–	26	for M5
	3 stations	52	104	26	9	8	13	20	33	10	35,5	78	G 1/8	G 3/8	40	24	52	–	26	for M5
	4-20 stations	52	104	26	9	8	13	20	33	10	35,5	(x·26)+23	G 1/8	G 3/8	40	24	6,5	(x·26)+10	26	for M5
V62	2 stations	60	120	29	9	8	15	22	38	13	35,5	70	G 1/8	G 1/2	44	32	35	–	35	for M6
	3 stations	60	120	29	9	8	15	22	38	13	35,5	105	G 1/8	G 1/2	44	32	70	–	35	for M6
	4-20 stations	60	120	29	9	8	15	22	38	13	35,5	(x·35)+26	G 1/8	G 1/2	44	32	7	(x·35)+12	35	for M6

Our policy is one of continued research and development. We therefore reserve the right to amend, without notice, the specifications given in this document.

Manifold System

for common pressure supply

				
Manifold 2- to 12 stations cpl. with connecting- and sealing elements	Bracket for manifold		Blanking plug for unused valve station	
Types see table below	**0555485** (V60)	0,080 kg	**0491586** (V60)	0,010 kg
	0555484 (V61)	0,150 kg	**0491587** (V61)	0,020 kg

Dimensional drawing

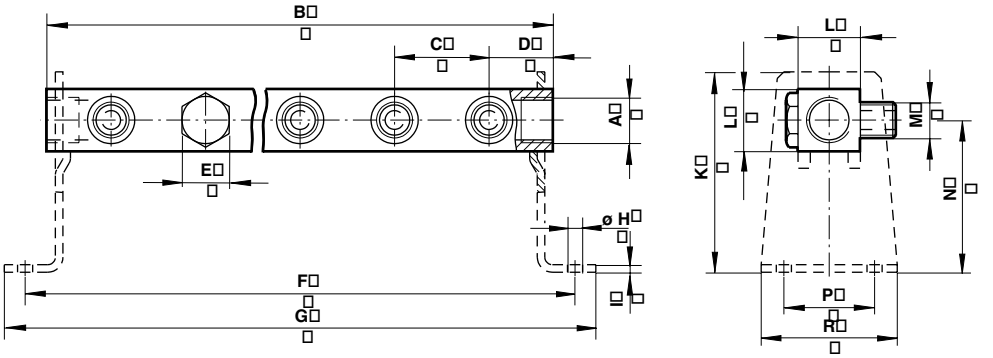

Pressure supply on both sides if 4 or more valves are to operate at the same time.

Type	Number of stations	A	B	C	D	E	F	G	Ø H	I	K	L	M	N	P	R	Weight kg
for V60																	
2639622	2	G1/4	76	32	22	14	90	106	6,5	2,5	60	16	G1/8	48	28	42	0,053
2639623	3	G1/4	108	32	22	14	122	138	6,5	2,5	60	16	G1/8	48	28	42	0,075
2639624	4	G1/4	140	32	22	14	154	170	6,5	2,5	60	16	G1/8	48	28	42	0,099
2639625	5	G1/4	172	32	22	14	186	202	6,5	2,5	60	16	G1/8	48	28	42	0,123
2639626	6	G1/4	204	32	22	14	218	234	6,5	2,5	60	16	G1/8	48	28	42	0,147
2639627	7	G1/4	236	32	22	14	250	266	6,5	2,5	60	16	G1/8	48	28	42	0,174
2639628	8	G1/4	268	32	22	14	282	298	6,5	2,5	60	16	G1/8	48	28	42	0,194
2639629	9	G1/4	300	32	22	14	314	330	6,5	2,5	60	16	G1/8	48	28	42	0,209
2639630	10	G1/4	332	32	22	14	346	362	6,5	2,5	60	16	G1/8	48	28	42	0,230
2639632	12	G1/4	396	32	22	14	410	426	6,5	2,5	60	16	G1/8	48	28	42	0,280
for V61																	
2639422	2	G3/8	85	35	25	19	100	116	6,5	3	75	23	G1/4	57	35	50	0,130
2639423	3	G3/8	120	35	25	19	135	151	6,5	3	75	23	G1/4	57	35	50	0,192
2639424	4	G3/8	155	35	25	19	170	186	6,5	3	75	23	G1/4	57	35	50	0,250
2639425	5	G3/8	190	35	25	19	205	221	6,5	3	75	23	G1/4	57	35	50	0,309
2639426	6	G3/8	225	35	25	19	240	256	6,5	3	75	23	G1/4	57	35	50	0,367
2639427	7	G3/8	260	35	25	19	275	291	6,5	3	75	23	G1/4	57	35	50	0,421
2639428	8	G3/8	295	35	25	19	310	326	6,5	3	75	23	G1/4	57	35	50	0,482
2639429	9	G3/8	330	35	25	19	345	361	6,5	3	75	23	G1/4	57	35	50	0,537
2639430	10	G3/8	365	35	25	19	380	396	6,5	3	75	23	G1/4	57	35	50	0,595
2639432	12	G3/8	435	35	25	19	450	466	6,5	3	75	23	G1/4	57	35	50	0,642

Our policy is one of continued research and development. We therefore reserve the right to amend, without notice, the specifications given in this document.

Accessories Manifold Plates

 Blanking plate		 Blanking plug for 2 station and 3 station manifolds		 Pressure shut-off part for 4 station up to 20 station manifolds		 Intermediate supply/exhaust plate (instead of a valve)		 Adapter plate to connect different manifold sizes	
0100561 (V60)	0,050 kg	**0701208** (V60)	0,006 kg	**0100567** (V60)	0,010 kg	**0101808** (V60)	0,110 kg	**0102158** (V60→V61)	on request
0100563 (V61)	0,060 kg	**0701209** (V61)	0,012 kg	**0100569** (V61)	0,015 kg	**0101797** (V61)	0,220 kg	**0102160** (V61→V62)	on request
0100565 (V62)	0,100 kg	**0701210** (V62)	0,020 kg	**0100571** (V62)	0,020 kg	**0101809** (V62)	0,390 kg	**0102162** (V60→V62)	on request
 Pressure switch adapter plate		 DIN rail mounting kit		 Blanking plug for port 12/14 and 82/84		 Blanking plug for port 1, 3, 5			
0102146 (V60)	0,130 kg	**0101796** (V60)	0,010 kg	**160050018** (V60)	0,008 kg	**160050028** (V60)	0,015 kg		
0102148 (V61)	0,160 kg	**0101796** (V61)	0,010 kg	**160050018** (V61)	0,008 kg	**160050038** (V61)	0,020 kg		
0102150 (V62)	0,260 kg	**0101796** (V62)	0,010 kg	**160050018** (V62)	0,008 kg	**160050048** (V62)	0,035 kg		

Accessories Valves

 Silencer sintered bronze		 Exhaust flow regulator without silencer		 Exhaust flow regulator with silencer		 Diffusor for pilot exhaust		 Circlip for coil fixing	
0014400 (M5)	0,025 kg	**4048004** (G 1/8)	0,025 kg	**4048005** (G 1/8)	0,025 kg	**81110800**	0,002 kg	**81021600**	0,001 kg
0014510 (G 1/8)	0,008 kg	**4048104** (G 1/4)	0,060 kg	**4048105** (G 1/4)	0,060 kg				
0014610 (G 1/4)	0,010 kg	(G 3/8) on request		(G 3/8) on request					
0014710 (G 3/8)	0,025 kg								

Connectors

 Industrial standard 22 mm 2-pole + PE		 DIN EN 175301-803 (DIN 43650 B) 2-pole + PE		 DIN EN 175301-803 (DIN 43650 C) 3-pole + PE		 DIN EN 175301-803 (DIN 43650 B) with AS-i Interface		 DIN EN 175301-803 (DIN 43650 B) with AS-i Interface	
0657868 12...250 VAC/DC	0,005 kg	**0680003** 12...250 VAC/DC	0,005 kg	**0588666** 12...250 VAC/DC	0,002 kg	**0101033** 1 output	0,030 kg	**0101032** 1 output + 2 inputs with M12 x 1	0,030 kg
0680000 15...30 VDC; LED, surge surpression	0,005 kg	**0664811** 15...30 VDC; LED, surge surpression	0,005 kg	**0102144** 12...250 VAC/DC; cable 3 m	0,200 kg				
0680001 150...250 VAC; glim lamp	0,005 kg	**0664812** 150...250 VAC; glim lamp	0,005 kg						

Our policy is one of continued research and development. We therefore reserve the right to amend, without notice, the specifications given in this document.

Mounting instructions

DIN rail

1. Mount screw in rod.

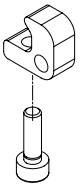

3. Position manifold plate on DIN rail.

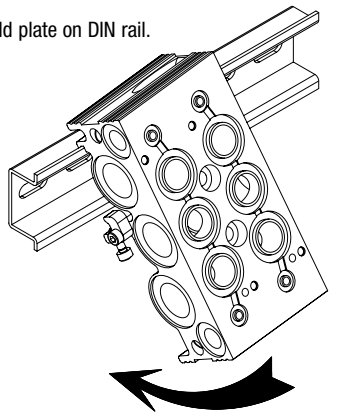

2. Fix rod on manifold plate with screw.

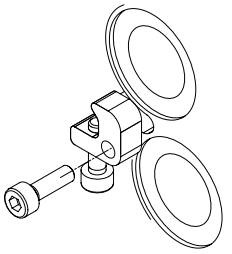

4. Tighten screws in steps as shown on picture.

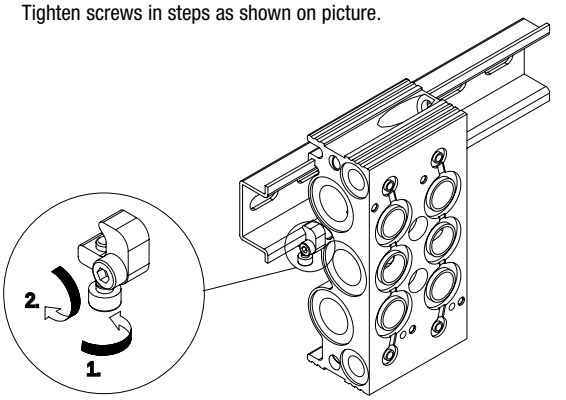

Mounting instructions

Pressure shut-off part

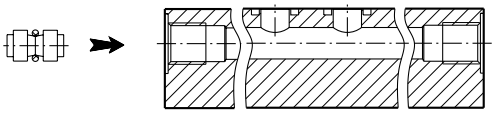

1. Set stopper at required position (in main pressure line).

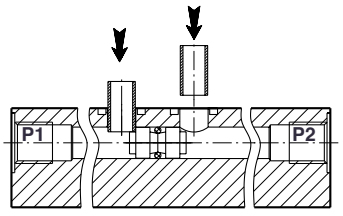

2. Plug-in two bushes to lock stopper in position.

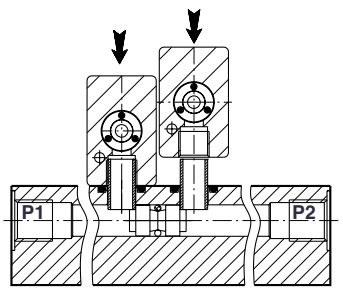

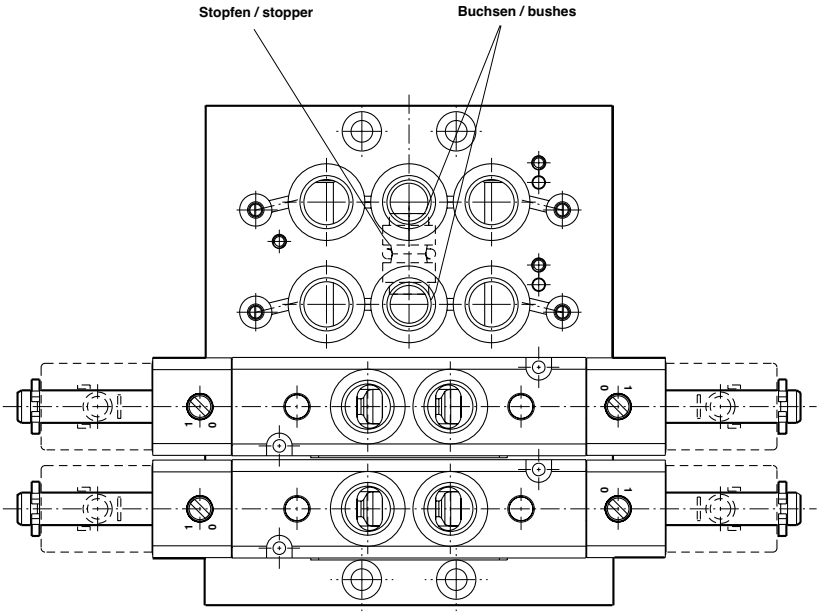

3. Mount valves on manifold plate (bushes rise into P port of valves).

Our policy is one of continued research and development. We therefore reserve the right to amend, without notice, the specifications given in this document.

Extension possibilities with manifold plates

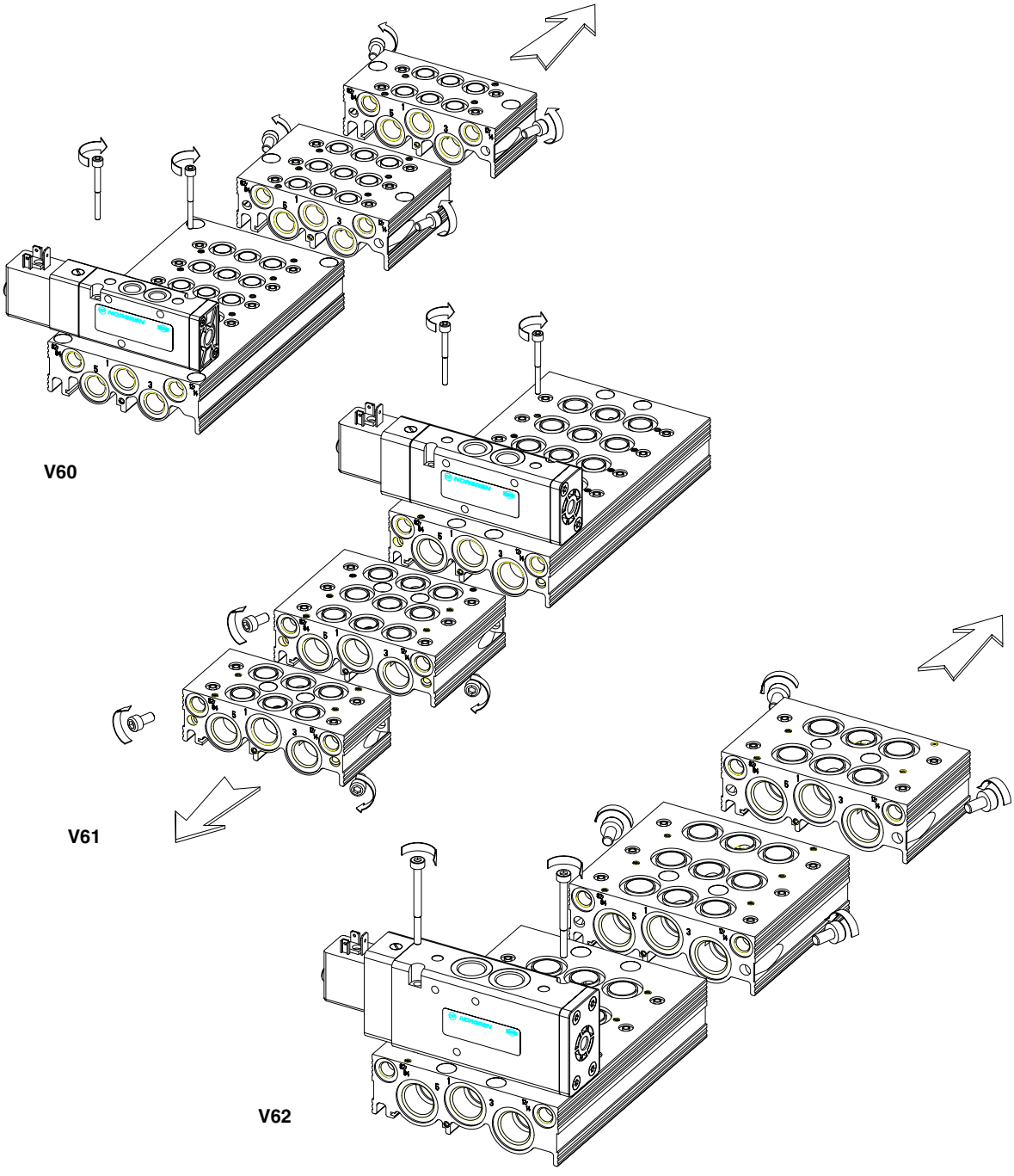

Our policy is one of continued research and development. We therefore reserve the right to amend, without notice, the specifications given in this document.

Pneumatic Pressure Switch and Sensors with Flange Connection – ideal for Sub-base Mounting

Series	Technical data	Pressure ranges/Versions	Type	Data sheet
33D 	**Electronic Pressure Switch / -Sensor** **1 x PNP; 2 x PNP; 1 x PNP / 4 ... 20 mA** For applications with high accuracy Lubricated or unlubricated air and neutral gases Electrical connection M12 x 1 U_B = 10 ... 32 V DC (15 ... 32 V DC with 4 ... 20 mA) Permanent indication of system pressure and unit are indicated Easy programming due to display informations LCD-Display illuminated Piezo-resistant silicon-sensor Unit is progammable (bar, psi, kpa) Adjustments can be protected by code Set-/resetpoint, window or hysteresis mode programmable Time functions 0 to 20 s programmable	 -1 ... +1 bar, 1 x PNP -1 ... +1 bar, 2 x PNP -1 ... +1 bar, 1 x PNP / 4 ... 20 mA 0 ... 16 bar, 1 x PNP 0 ... 16 bar, 2 x PNP 0 ... 16 bar, 1 x PNP / 4 ... 20 mA	 0863016 0863026 0863046 0863216 0863226 0863246	 5.11.027 (7503426)
18S 	**Electronic Pressure Sensor** **4 ... 20 mA, 2-wire technology** For all standard applictions with permanent pressure control Lubricated or unlubricated air and neutral gases Electrical connection M12 x 1 or DIN 43650 A U_B = 10 ... 32 V DC Output signal 4 ... 20 mA (R_{lmax} = 1100 ohm) Linearity 0,5 % FS Piezo-resistant silicon-sensor	 -1 ... +1 bar (M12 x 1) 0 ... 10 bar (M12 x 1) -1 ... +1 bar (DIN 43650 A) 0 ... 10 bar (DIN 43650 A)	 0862085 0862185 0862086 0862186	 5.11.026 (7503423)
18D 	**Electromechanical Pressure Switch** For all standard applications with medium accuracy (+/– 3 % repeatability) Lubricated or unlubricated air and neutral gases Electrical connection M12 x 1 or DIN 43650 A Microswitch with goldplated contacts (SPDT) Approved by UL and CSA	 -1 ... 0 bar (DIN 43650 A) 0,5 ... 8 bar (DIN 43650 A) -1 ... 0 bar (M12 x 1) 0,5 ... 8 bar (M12 x 1)	 0881100 0881300 0881160 0881360	 5.11.021 (7501628)

Our policy is one of continued research and development. We therefore reserve the right to amend, without notice, the specifications given in this document.

Dimensional drawings

33D

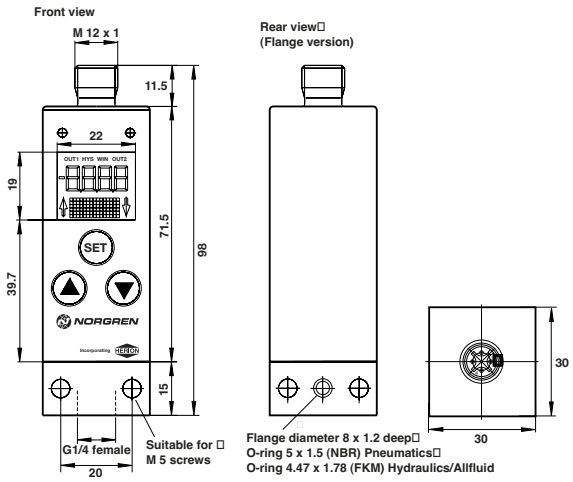

18S

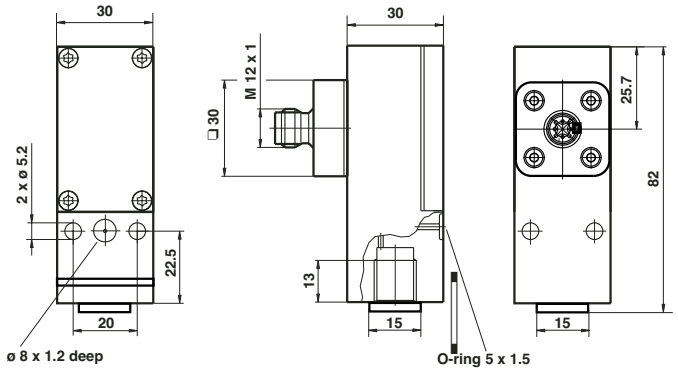

18D

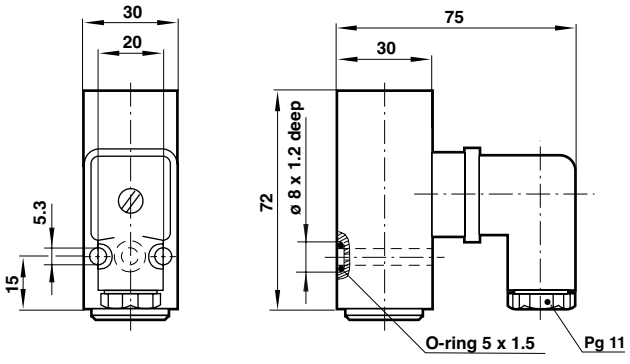

Warning

These products are intended for use in industrial compressed air systems only. Do not use these products where pressures and temperatures can exceed those listed under **'Technical Data'**.
Before using these products with fluids other than those specified, for non-industrial applications, life-support systems, or other applications not within published specifications, consult NORGREN.
Through misuse, age, or malfunction, components used in fluid power systems can fail in various modes. The system designer is warned to consider the failure modes of all component parts used in fluid power systems and to provide adequate safeguards to prevent personal injury or damage to equipment in the event of such failure.
System designers must provide a warning to end users in the system instructional manual if protection against a failure mode cannot be adequately provided.
System designers and end users are cautioned to review specific warnings found in instruction sheets packed and shipped with these products where applicable.

Our policy is one of continued research and development. We therefore reserve the right to amend, without notice, the specifications given in this document.