TS9789

Temperature cable sensor with screw-in sensor

TS-PT100-SCREW-IN M5/0,5M PUR

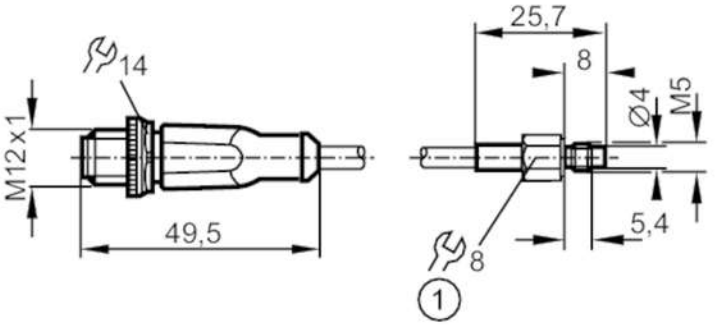

Product characteristics			
Measuring range		-40...90 °C	-40...194 °F
Process connection		threaded connection M5 external thread	
Application			
Special feature		Gold-plated contacts	
Measuring element		1 x Pt 100; (to DIN EN 60751, class A)	
Installation		surface mount RTD for solid bodies	
Electrical data			
Protection class		III	
Measuring/setting range			
Measuring range		-40...90 °C	-40...194 °F
Accuracy / deviations			
Accuracy	[K]	± (0,15 K + 0,002 x|t|)	
Response times			
Dynamic response T05 / T09	[s]	3 / 8; (to DIN EN 60751)	
Operating conditions			
Protection		IP 67	
Tests / approvals			
Shock resistance		DIN EN 60068-2-27	50 g (11 ms)
Vibration resistance		DIN EN 60068-2-6	10 g (10...2000 Hz)
MTTF	[years]	11415.5	
Mechanical data			
Weight	[g]	38.7	
Housing		cylindrical	
Design		screw-in sensor	
Materials		stainless steel (316L/1.4404)	
Tightening torque	[Nm]	1.5	
Process connection		threaded connection M5 external thread	
Probe diameter	[mm]	4	
Remarks			
Pack quantity		1 pcs.	

TS9789

Temperature cable sensor with screw-in sensor

TS-PT100-SCREW-IN M5/0,5M PUR

Electrical connection

Cable: 0.5 m, PUR

Connector: 1 x M12; coding: A; Contacts: gold-plated



Connection

