

A



SAE Split Flange Halves 14

DB



SAE Flange Clamp 16

BM



SAE Split Flange Halves (Flat Style) 18

DB-FL



SAE Flange Clamp (Flat Style) 19

BM-FL



SAE Flange Clamp with Metric Tapped Holes 20

BM-G

A

SAE Split Flange Halves
Type DB ▪ 3000 PSI Series



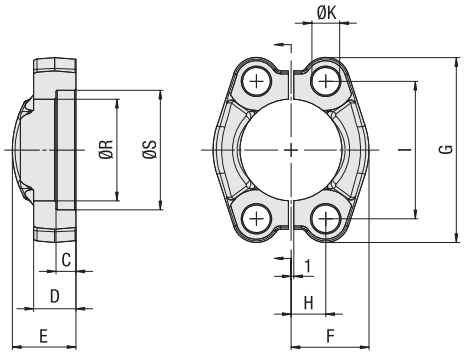

3000 PSI Standard Pressure Series (according to ISO 6162-1:2012)

Nominal Size		PN[1] (bar/PSI)	Dimensions (mm/in)										Weight (kg/lbs) ca.	for Bolts		Ordering Codes
DN	(in)	10.9	ØR	ØS	C	D	E	F	G	H	I	ØK[2]	per 100	Metric	UNC	
13	1/2	350	24,3	31	6,2	13	19	22,8	54	8,75	38,1	8,7	13,20	M8x25	5/16–18 UNC x 1-1/4	DB-301-W66
		5075	.96	1.22	.24	.51	.75	.90	2.13	.34	1.50	.34	29.04			
19	3/4	350	32,2	38,9	6,2	14	22	25,9	65	11,15	47,6	10,5	17,00	M10x30	3/8–16 UNC x 1-1/4	DB-302-W66
		5075	1.27	1.53	.24	.55	.87	1.02	2.56	.44	1.87	.41	37.40			
25	1	345	38,5	45,3	7,5	16	24	29,2	70	13,1	52,4	10,5	22,00	M10x30	3/8–16 UNC x 1-1/4	DB-303-W66
		5003	1.52	1.78	.30	.63	.94	1.15	2.76	.52	2.06	.41	48.40			
32	1-1/4	280	43,7	51,6	7,5	14	22	36,3	79,5	15,1	58,7	12	30,00		7/16–14 UNC x 1-1/2	DB-304-U-W66
		4061	1.72	2.03	.30	.55	.87	1.43	3.13	.59	2.31	.47	66.00			
32	1-1/4	280	43,7	51,6	7,5	14	22	36,3	79,5	15,1	58,7	12,5	31,20	M12x35		DB-304-M12-W66
		4061	1.72	2.03	.30	.55	.87	1.43	3.13	.59	2.31	.49	68.64			
32	1-1/4	280	43,7	51,6	7,5	14	22	36,3	79,5	15,1	58,7	10,5	32,20	M10x30		DB-304-M-W66
		4061	1.72	2.03	.30	.55	.87	1.43	3.13	.59	2.31	.41	70.84			
38	1-1/2	210	50,8	61,1	7,5	16	25	41,1	94	17,85	69,9	13,5	47,00	M12x35	1/2–13 UNC x 1-1/2	DB-305-W66
		3045	2.00	2.41	.30	.63	.98	1.62	3.70	.70	2.75	.53	103.40			
38	1-1/2	210	50,8	61,1	7,5	16	25	41,1	94	17,85	69,9	15	46,00	M14x35		DB-305-M14-W66
		3045	2.00	2.41	.30	.63	.98	1.62	3.70	.70	2.75	.59	101.20			
51	2	210	62,8	72,3	9	16	26	48,2	102	21,45	77,8	13,5	54,20	M12x35	1/2–13 UNC x 1-1/2	DB-306-W66
		3045	2.47	2.85	.35	.63	1.02	1.90	4.02	.84	3.06	.53	119.24			
51	2	210	62,8	72,3	9	16	26	48,2	102	21,45	77,8	15	50,00	M14x35		DB-306-M14-W66
		3045	2.47	2.85	.35	.63	1.02	1.90	4.02	.84	3.06	.59	110.00			
64	2-1/2	175	74,9	84,9	9	19	38	54,1	114,5	25,4	88,9	13,5	90,30	M12x40	1/2–13 UNC x 1-1/2	DB-307-W66
		2538	2.95	3.34	.35	.75	1.50	2.13	4.51	1.00	3.50	.53	198.66			
64	2-1/2	175	74,9	84,9	9	19	38	54,1	114,5	25,4	88,9	15	74,00	M14x40		DB-307-M14-W66
		2538	2.95	3.34	.35	.75	1.50	2.13	4.51	1.00	3.50	.59	162.80			
76	3	160	90,9	102,4	9	22	41	65,3	135	30,95	106,4	17	135,60	M16x50	5/8–11 UNC x 2	DB-308-W66
		2320	3.58	4.03	.35	.87	1.61	2.57	5.31	1.22	4.19	.67	298.32			
89	3-1/2	35	102,4	115,1	10,7	22	28	69,6	152	34,95	120,7	17	135,00	M16x50	5/8–11 UNC x 2	DB-309-W66
		508	4.03	4.53	.42	.87	1.10	2.74	5.98	1.38	4.75	.67	297.00			
102	4	35	115	127,8	10,7	25	35	75,9	162	38,9	130,2	17	170,00	M16x50	5/8–11 UNC x 2	DB-310-W66
		508	4.53	5.03	.42	.98	1.38	2.99	6.38	1.53	5.13	.67	374.00			
127	5	35	140,5	153,2	10,7	28	41	90,4	184	46 5	152,4	17	246,80	M16x55	5/8–11 UNC x 2-1/4	DB-311-W66
		508	5.53	6.03	.42	1.10	1.61	3.56	7.24	.00	6.00	.67	542.96			

Materials / Ordering Options / Examples

* Pair of SAE Split Flange Halves made of Steel S355J2 / C45 or equivalent, zinc-plated and thick-film-passivated **DB-...-W66**
* Pair of SAE Split Flange Halves made of Steel S355J2 / C45 or equivalent, zinc/nickel-plated (on request) **DB-...-W3**
* Pair of SAE Split Flange Halves made of Stainless Steel V4A – 1.4404 (on request) **DB-...-W5**

* Kit including Metric bolts 10.9, spring rings, O-ring made of NBR (Buna-N®) **DB-...-M-B-W129-K**
* Kit including Metric bolts 10.9, spring rings, O-ring made of FKM (Viton®) **DB-...-M-V-W129-K**

* Kit including UNC bolts (Grade 8), spring rings, O-ring made of NBR (Buna-N®) **DB-...-U-B-W129-K**

[1] The maximum working pressure PN (bar/PSI) applies only to the flange itself and depends on the bolts used (Grade 10.9). The actual maximum working pressure depends on the thickness and the quality of the tube used.

[2] Dimensions of screw holes in part different to the ISO to match both Metric and UNC bolts.

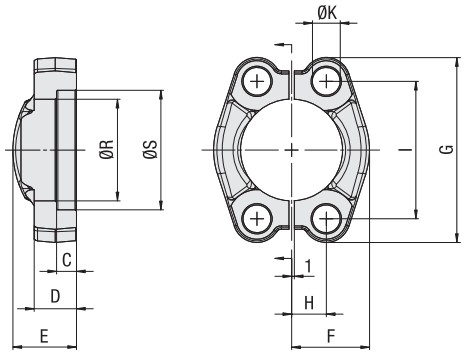

500 bar
7251 PSI

SAE Split Flange Halves
Type DB ▪ 6000 PSI Series



A

6000 PSI High Pressure Series (according to ISO 6162-2:2012)

Nominal Size		PN[1] (bar/PSI)	Dimensions (mm/in)										Weight (kg/lbs) ca.	for Bolts		Ordering Codes
DN	(in)	10.9	ØR	ØS	C	D	E	F	G	H	I	ØK[2]	per 100	Metric	UNC	
13	1/2	500	24,6	32,5	7,2	16	22	23,6	56,5	9,10	40,5	8,7	16,70	M8x30	5/16–18 UNC x 1-1/4	DB-601-W66
		7251	.97	1.28	.28	.63	.87	.93	2.22	.36	1.59	.34	36.74			
19	3/4	500	32,5	42	8,2	19	28	30	71	11,90	50,8	10,5	33,20	M10x35	3/8–16 UNC x 1-1/2	DB-602-W66
		7251	1.28	1.65	.32	.75	1.10	1.18	2.80	.47	2.00	.41	73.04			
25	1	500	38,8	48,4	9	24	33	34,8	81	13,90	57,2	11,9	51,30		7/16–14 UNC x 1-3/4	DB-603-U-W66
		7251	1.53	1.91	.35	.94	1.30	1.37	3.19	.55	2.25	.47	112.86			
25	1	500	38,8	48,4	9	24	33	34,8	81	13,90	57,2	13	52,20	M12x45		DB-603-M-W66
		7251	1.53	1.91	.35	.94	1.30	1.37	3.19	.55	2.25	.51	114.84			
32	1-1/4	500	44,5	54,8	9,8	27	38	38,6	95	15,90	66,6	13,5	83,70	M12x45	1/2–13 UNC x 1-3/4	DB-604-W66
		7251	1.75	2.16	.39	1.06	1.50	1.52	3.74	.63	2.62	.53	184.14			
32	1-1/4	500	44,5	54,8	9,8	27	38	38,6	95	15,90	66,6	15	80,00	M14x45		DB-604-M14-W66
		7251	1.75	2.16	.39	1.06	1.50	1.52	3.74	.63	2.62	.59	176.00			
38	1-1/2	500	51,6	64,3	12	30	43	47,5	113	18,25	79,3	17	135,00	M16x55	5/8–11 UNC x 2-1/4	DB-605-W66
		7251	2.03	2.53	.47	1.18	1.69	1.87	4.45	.72	3.12	.67	297.00			
51	2	500	67,6	80,2	12	37	52	56,9	133	22,25	96,8	21	210,00	M20x70	3/4–10 UNC x 2-3/4	DB-606-W66
		7251	2.66	3.16	.47	1.46	2.05	2.24	5.24	.88	3.81	.83	462.00			

[1] The maximum working pressure PN (bar/PSI) applies only to the flange itself and depends on the bolts used (Grade 10.9). The actual maximum working pressure depends on the thickness and the quality of the tube used.

[2] Dimensions of screw holes in part different to the ISO to match both Metric and UNC bolts.

Materials / Ordering Options / Examples

* Pair of SAE Split Flange Halves made of Steel S355J2 / C45 or equivalent, zinc-plated and thick-film-passivated **DB-...-W66**
* Pair of SAE Split Flange Halves made of Steel S355J2 / C45 or equivalent, zinc/nickel-plated (on request) **DB-...-W3**
* Pair of SAE Split Flange Halves made of Stainless Steel V4A – 1.4404 (on request) **DB-...-W5**

* Kit including Metric bolts 10.9, spring rings, O-ring made of NBR (Buna-N®) **DB-...-M-B-W129-K**
* Kit including Metric bolts 10.9, spring rings, O-ring made of FKM (Viton®) **DB-...-M-V-W129-K**

* Kit including UNC bolts (Grade 8), spring rings, O-ring made of NBR (Buna-N®) **DB-...-U-B-W129-K**

A

SAE Flange Clamp
Type BM ▪ 3000 PSI Series



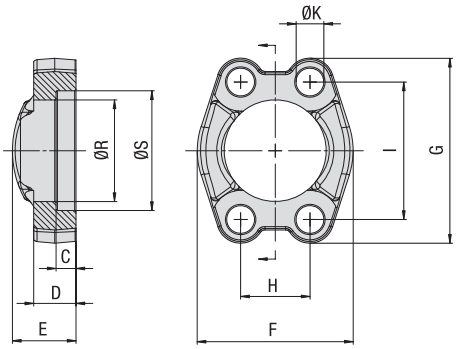

3000 PSI Standard Pressure Series (according to ISO 6162-1:2012)

Nominal Size		PN[1] (bar/PSI)	Dimensions (mm/in)										Weight (kg/lbs) ca.	for Bolts		Ordering Codes
DN	(in)	10.9	ØR	ØS	C	D	E	F	G	H	I	ØK[2]	per 100	Metric	UNC	
13	1/2	350	24,3	31	6,2	13	19	46	54	17,5	38,1	8,7	13,7	M8x25	5/16–18 UNC x 1-1/4	BM-301-W66
		5075	.96	1.22	.24	.51	.75	1.81	2.13	.69	1.50	.34	30.14			
19	3/4	350	32,2	38,9	6,2	14	22	52	65	22,3	47,6	10,5	20,1	M10x30	3/8–16 UNC x 1-1/4	BM-302-W66
		5075	1.27	1.53	.24	.55	.87	2.05	2.56	.88	1.87	.41	44.22			
25	1	345	38,5	45,3	7,5	16	24	59	70	26,2	52,4	10,5	22,9	M10x30	3/8–16 UNC x 1-1/4	BM-303-W66
		5003	1.52	1.78	.30	.63	.94	2.32	2.76	1.03	2.06	.41	50.38			
32	1-1/4	280	43,7	51,6	7,5	14	22	73	79,5	30,2	58,7	12	30,0		7/16–14 UNC x 1-1/2	BM-304-U-W66
		4061	1.72	2.03	.30	.55	.87	2.87	3.13	1.19	2.31	.47	66.00			
32	1-1/4	280	43,7	51,6	7,5	14	22	73	79,5	30,2	58,7	12,5	32,3	M12x35		BM-304-M12-W66
		4061	1.72	2.03	.30	.55	.87	2.87	3.13	1.19	2.31	.49	71.06			
32	1-1/4	280	43,7	51,6	7,5	14	22	73	79,5	30,2	58,7	10,5	32,8	M10x30		BM-304-M-W66
		4061	1.72	2.03	.30	.55	.87	2.87	3.13	1.19	2.31	.41	72.16			
38	1-1/2	210	50,8	61,1	7,5	16	25	83	94	35,7	69,9	13,5	48,6	M12x35	1/2–13 UNC x 1-1/2	BM-305-W66
		3045	2.00	2.41	.30	.63	.98	3.27	3.70	1.41	2.75	.53	106.92			
38	1-1/2	210	50,8	61,1	7,5	16	25	83	94	35,7	69,9	15	45,0	M14x35		BM-305-M14-W66
		3045	2.00	2.41	.30	.63	.98	3.27	3.70	1.41	2.75	.59	99.00			
51	2	210	62,8	72,3	9	16	26	97	102	42,9	77,8	13,5	55,6	M12x35	1/2–13 UNC x 1-1/2	BM-306-W66
		3045	2.47	2.85	.35	.63	1.02	3.82	4.02	1.69	3.06	.53	122.32			
51	2	210	62,8	72,3	9	16	26	97	102	42,9	77,8	15	50,0	M14x35		BM-306-M14-W66
		3045	2.47	2.85	.35	.63	1.02	3.82	4.02	1.69	3.06	.59	110.00			
64	2-1/2	175	74,9	84,9	9	19	38	109	114,5	50,8	88,9	13,5	89,7	M12x40	1/2–13 UNC x 1-1/2	BM-307-W66
		2538	2.95	3.34	.35	.75	1.50	4.29	4.51	2.00	3.50	.53	197.34			
64	2-1/2	175	74,9	84,9	9	19	38	109	114,5	50,8	88,9	15	74,0	M14x40		BM-307-M14-W66
		2538	2.95	3.34	.35	.75	1.50	4.29	4.51	2.00	3.50	.59	162.80			
76	3	160	90,9	102,4	9	22	41	131	135	61,9	106,4	17	135,9	M16x50	5/8–11 UNC x 2	BM-308-W66
		2320	3.58	4.03	.35	.87	1.61	5.16	5.31	2.44	4.19	.67	298.99			
89	3-1/2	35	102,4	115,1	10,7	22	28	140	152	69,9	120,7	17	134,1	M16x50	5/8–11 UNC x 2	BM-309-W66
		508	4.03	4.53	.42	.87	1.10	5.51	5.98	2.75	4.75	.67	295.02			
102	4	35	115	127,8	10,7	25	35	152	162	77,8	130,2	17	166,0	M16x50	5/8–11 UNC x 2	BM-310-W66
		508	4.53	5.03	.42	.98	1.38	5.98	6.38	3.06	5.13	.67	365.20			
127	5	35	140,5	153,2	10,7	28	41	181	184	92,1	152,4	17	253,8	M16x55	5/8–11 UNC x 2-1/4	BM-311-W66
		508	5.53	6.03	.42	1.10	1.61	7.13	7.24	3.63	6.00	.67	558.36			

Materials / Ordering Options / Examples

* Flange Clamp made of Steel S355J2 / C45 or equivalent, zinc-plated and thick-film-passivated	**BM-...-W66**
* Flange Clamp made of Steel S355J2 / C45 or equivalent, zinc/nickel-plated (on request)	**BM-...-W3**
* Flange Clamp made of Stainless Steel V4A – 1.4404 (on request)	**BM-...-W5**
* Kit including Metric bolts 10.9, spring rings, O-ring made of NBR (Buna-N®)	**BM-...-M-B-W129-K**
* Kit including Metric bolts 10.9, spring rings, O-ring made of FKM (Viton®)	**BM-...-M-V-W129-K**
* Kit including UNC bolts (Grade 8), spring rings, O-ring made of NBR (Buna-N®)	**BM-...-U-B-W129-K**

[1] The maximum working pressure PN (bar/PSI) applies only to the flange itself and depends on the bolts used (Grade 10.9). The actual maximum working pressure depends on the thickness and the quality of the tube used.

[2] Dimensions of screw holes in part different to the ISO to match both Metric and UNC bolts.

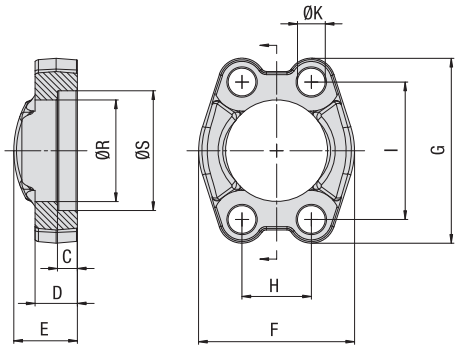

500 bar
7251 PSI

SAE Flange Clamp
Type BM ▪ 6000 PSI Series



6000 PSI High Pressure Series (according to ISO 6162-2:2012)

Nominal Size		PN[1] (bar/PSI)	Dimensions (mm/in)										Weight (kg/lbs) ca.	for Bolts		Ordering Codes
DN	(in)	10.9	ØR	ØS	C	D	E	F	G	H	I	ØK[2]	per 100	Metric	UNC	
13	1/2	500	24,6	32,5	7,2	16	22	48	56,5	18,2	40,5	8,7	17,3	M8x30	5/16–18 UNC x 1-1/4	BM-601-W66
		7251	.97	1.28	.28	.63	.87	1.89	2.22	.72	1.59	.34	38.06			
19	3/4	500	32,5	42	8,2	19	28	60	71	23,8	50,8	10,5	35,0	M10x35	3/8–16 UNC x 1-1/2	BM-602-W66
		7251	1.28	1.65	.32	.75	1.10	2.36	2.80	.94	2.00	.41	77.00			
25	1	500	38,8	48,4	9	24	33	70	81	27,8	57,2	12	57,8		7/16–14 UNC x 1-3/4	BM-603-U-W66
		7251	1.53	1.91	.35	.94	1.30	2.76	3.19	1.09	2.25	.47	127.16			
25	1	500	38,8	48,4	9	24	33	70	81	27,8	57,2	13	55,7	M12x45		BM-603-M-W66
		7251	1.53	1.91	.35	.94	1.30	2.76	3.19	1.09	2.25	.51	122.54			
32	1-1/4	500	44,5	54,8	9,8	27	38	78	95	31,8	66,6	13,5	85,0	M12x45	1/2–13 UNC x 1-3/4	BM-604-W66
		7251	1.75	2.16	.39	1.06	1.50	3.07	3.74	1.25	2.62	.53	187.00			
32	1-1/4	500	44,5	54,8	9,8	27	38	78	95	31,8	66,6	15	80,8	M14x45		BM-604-M14-W66
		7251	1.75	2.16	.39	1.06	1.50	3.07	3.74	1.25	2.62	.59	177.76			
38	1-1/2	500	51,6	64,3	12	30	43	95	113	36,5	79,3	17	139,5	M16x55	5/8–11 UNC x 2-1/4	BM-605-W66
		7251	2.03	2.53	.47	1.18	1.69	3.74	4.45	1.44	3.12	.67	306.90			
51	2	500	67,6	80,2	12	37	52	114	133	44,5	96,8	21	211,0	M20x70	3/4–10 UNC x 2-3/4	BM-606-W66
		7251	2.66	3.16	.47	1.46	2.05	4.49	5.24	1.75	3.81	.83	464.20			

[1] The maximum working pressure PN (bar/PSI) applies only to the flange itself and depends on the bolts used (Grade 10.9). The actual maximum working pressure depends on the thickness and the quality of the tube used.

[2] Dimensions of screw holes in part different to the ISO to match both Metric and UNC bolts.

Materials / Ordering Options / Examples

* Flange Clamp made of Steel S355J2 / C45 or equivalent, zinc-plated and thick-film-passivated	**BM-...-W66**
* Flange Clamp made of Steel S355J2 / C45 or equivalent, zinc/nickel-plated (on request)	**BM-...-W3**
* Flange Clamp made of Stainless Steel V4A – 1.4404 (on request)	**BM-...-W5**
* Kit including Metric bolts 10.9, spring rings, O-ring made of NBR (Buna-N®)	**BM-...-M-B-W129-K**
* Kit including Metric bolts 10.9, spring rings, O-ring made of FKM (Viton®)	**BM-...-M-V-W129-K**
* Kit including UNC bolts (Grade 8), spring rings, O-ring made of NBR (Buna-N®)	**BM-...-U-B-W129-K**

A

SAE Split Flange Halves (Flat Style)
Type DB-FL ▪ 3000 / 6000 PSI Series



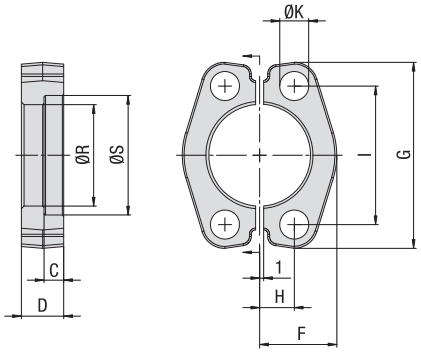

3000 PSI Standard Pressure Series (according to ISO 6162-1:2012)

Nominal Size		PN[1] (bar/PSI)	Dimensions (mm/in)									Weight (kg/lbs) ca.	for Bolts		Ordering Codes
DN	(in)	10.9	ØR	ØS	C	D	F	G	H	I	ØK[2]	per 100	Metric	UNC	
13	1/2	350	24,3	31	6,2	13	22,8	54	8,75	38,1	8,7	10,6	M8x25	5/16–18 UNC x 1-1/4	DB-FL-301-W66
		5075	.96	1.22	.24	.51	.90	2.13	.34	1.50	.34	23.32			
19	3/4	350	32,2	38,9	6,2	14	25,9	65	11,15	47,6	10,5	15,1	M10x30	3/8–16 UNC x 1-1/4	DB-FL-302-W66
		5075	1.27	1.53	.24	.55	1.02	2.56	.44	1.87	.41	33.13			
25	1	345	38,5	45,3	7,5	16	29,2	70	13,1	52,4	10,5	19,0	M10x30	3/8–16 UNC x 1-1/4	DB-FL-303-W66
		5003	1.52	1.78	.30	.63	1.15	2.76	.52	2.06	.41	41.80			
32	1-1/4	280	43,7	51,6	7,5	14	36,6	79	15,1	58,7	10,5	25,4	M10x35		DB-FL-304-M-W66
		4061	1.72	2.03	.30	.55	1.44	3.11	.59	2.31	.41	55.88			
38	1-1/2	210	50,8	61,6	7,5	16	41,1	94	17,85	69,9	13,5	40,3	M12x35	1/2–13 UNC x 1-1/2	DB-FL-305-W66
		3045	2.00	2.43	.30	.63	1.62	3.70	.70	2.75	.53	88.66			
51	2	210	62,8	72,3	9	16	48,2	102	21,45	77,8	13,5	45,4	M12x35	1/2–13 UNC x 1-1/2	DB-FL-306-W66
		3045	2.47	2.85	.35	.63	1.90	4.02	.84	3.06	.53	99.81			
64	2-1/2	175	74,9	84,9	9	19	53	115	25,4	88,9	13,5	63,4	M12x40	1/2–13 UNC x 1-1/2	DB-FL-307-W66
		2538	2.95	3.34	.35	.75	2.09	4.53	1.00	3.50	.53	139.48			
76	3	160	90,9	102,4	9	22	64,3	135	30,95	106,4	17	103,6	M16x50	5/8–11 UNC x 2	DB-FL-308-W66
		1450	3.58	4.03	.35	.87	2.53	5.31	1.22	4.19	.67	227.92			

6000 PSI High Pressure Series (according to ISO 6162-2:2012)

500 bar / 7251 PSI

Nominal Size		PN[1] (bar/PSI)	Dimensions (mm/in)									Weight (kg/lbs) ca.	for Bolts		Ordering Codes
DN	(in)	10.9	ØR	ØS	C	D	F	G	H	I	ØK[2]	per 100	Metric	UNC	
13	1/2	500	24,6	32,5	7,2	16	23,6	56	9,1	40,5	8,7	15,1	M8x30	5/16–18 UNC x 1-1/4	DB-FL-601-W66
		7251	.97	1.28	.28	.63	.93	2.20	.36	1.59	.34	33.18			
19	3/4	500	32,5	42	8,2	20	30,0	71	11,9	50,8	10,5	30,8	M10x35	3/8–16 UNC x 1-1/2	DB-FL-602-W66
		7251	1.28	1.65	.32	.79	1.18	2.80	.47	2.00	.41	67.76			
25	1	500	38,8	48,4	9	25	34,8	81	13,9	57,2	13	52,2	M12x45		DB-FL-603-M-W66
		7251	1.53	1.91	.35	.98	1.37	3.19	.55	2.25	.51	114.84			
32	1-1/4	500	44,5	54,8	9,8	27	38,6	95	15,9	66,6	15	69,5	M14x45		DB-FL-604-M14-W66
		7251	1.75	2.16	.39	1.06	1.52	3.74	.63	2.62	.59	152.90			
38	1-1/2	500	51,6	64,3	12	30	47,5	113	18,25	79,3	17	116,8	M16x55	5/8–11 UNC x 2-1/4	DB-FL-605-W66
		7251	2.03	2.53	.47	1.18	1.87	4.45	.72	3.12	.67	256.96			
51	2	500	67,6	80,2	12	37	56,9	133	22,25	96,8	21	184,7	M20x70	3/4–10 UNC x 2-3/4	DB-FL-606-W66
		7251	2.66	3.16	.47	1.46	2.24	5.24	.88	3.81	.83	406.34			
64	2-1/2	500	89,5	108,5	20	48	75	166	29,35	123,8	25	281,4	M24x80		DB-FL-607-M-W66[3]
		7251	3.52	4.27	.79	1.89	2.95	6.54	1.16	4.87	.98	619.08			
76	3	500	114,5	132,5	25	58	89	210	35,7	152,4	32	462,1	M30x90		DB-FL-608-M-W66[3]
		7251	4.51	5.22	.98	2.28	3.50	8.27	1.41	6.00	1.26	1016.62			

Materials / Ordering Options / Examples

* Pair of SAE Split Flange Halves (Flat Style) made of Steel C55 or equivalent, zinc-plated and thick-film-passivated — **DB-FL-...-W66**

* Kit including Metric bolts 10.9, spring rings, O-ring made of NBR (Buna-N®) — **DB-FL-...-M-B-W129-K**
* Kit including Metric bolts 10.9, spring rings, O-ring made of FKM (Viton®) — **DB-FL-...-M-V-W129-K**

* Kit including UNC bolts (Grade 8), spring rings, O-ring made of NBR (Buna-N®) — **DB-FL-...-U-B-W129-K**

[1] The maximum working pressure PN (bar/PSI) applies only to the flange itself and depends on the bolts used (Grade 10.9). The actual maximum working pressure depends on the thickness and the quality of the tube used.

[2] Dimensions of screw holes in part different to the ISO to match both Metric and UNC bolts.

[3] Made of steel C45 or equivalent, zinc-plated and thick-film-passivated.

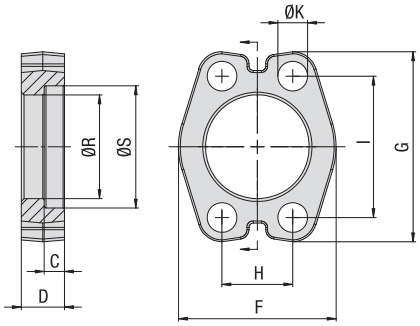

SAE Flange Clamp (Flat Style)
Type BM-FL ▪ 3000 / 6000 PSI Series



3000 PSI Standard Pressure Series (according to ISO 6162-1:2012)

Nominal Size		PN[1] (bar/PSI)	Dimensions (mm/in)									Weight (kg/lbs) ca.	for Bolts		Ordering Codes
DN	(in)	10.9	ØR	ØS	C	D	F	G	H	I	ØK[2]	per 100	Metric	UNC	
13	1/2	350	24,3	31	6,2	13	45,6	54	17,5	38,1	8,7	11,4	M8x25	5/16–18 UNC x 1-1/4	BM-FL-301-W66
		5075	.96	1.22	.24	.51	1.80	2.13	.69	1.50	.34	25.08			
19	3/4	350	32,2	38,9	6,2	14	51,8	65	22,3	47,6	10,5	15,0	M10x30	3/8–16 UNC x 1-1/4	BM-FL-302-W66
		5075	1.27	1.53	.24	.55	2.04	2.56	.88	1.87	.41	33.00			
25	1	345	38,5	45,3	7,5	16	58,4	70	26,2	52,4	10,5	19,2	M10x30	3/8–16 UNC x 1-1/4	BM-FL-303-W66
		5003	1.52	1.78	.30	.63	2.30	2.76	1.03	2.06	.41	42.24			
32	1-1/4	280	43,7	51,6	7,5	14	73,2	79	30,2	58,7	10,5	25,7	M10x35		BM-FL-304-M-W66
		4061	1.72	2.03	.30	.55	2.88	3.11	1.19	2.31	.41	56.54			
38	1-1/2	210	50,8	61,1	7,5	16	82,2	94	35,7	69,9	13,5	39,1	M12x35	1/2–13 UNC x 1-1/2	BM-FL-305-W66
		3045	2.00	2.41	.30	.63	3.24	3.70	1.41	2.75	.53	86.02			
51	2	210	62,8	72,3	9	16	96,4	102	42,9	77,8	13,5	47,3	M12x35	1/2–13 UNC x 1-1/2	BM-FL-306-W66
		3045	2.47	2.85	.35	.63	3.80	4.02	1.69	3.06	.53	104.06			
64	2-1/2	175	74,9	84,9	9	19	106	115	50,8	88,9	13,5	63,6	M12x40	1/2–13 UNC x 1-1/2	BM-FL-307-W66
		2538	2.95	3.34	.35	.75	4.17	4.53	2.00	3.50	.53	139.92			
76	3	160	90,9	102,4	9	22	128,6	135	61,9	106,4	17	104,9	M16x50	5/8–11 UNC x 2	BM-FL-308-W66
		2320	3.58	4.03	.35	.87	5.06	5.31	2.44	4.19	.67	230.78			

500 bar / 7251 PSI

6000 PSI High Pressure Series (according to ISO 6162-2:2012)

Nominal Size		PN[1] (bar/PSI)	Dimensions (mm/in)									Weight (kg/lbs) ca.	for Bolts		Ordering Codes
DN	(in)	10.9	ØR	ØS	C	D	F	G	H	I	ØK[2]	per 100	Metric	UNC	
13	1/2	500	24,6	32,5	7,2	16	47,2	56	18,2	40,5	8,7	15,0	M8x30	5/16–18 UNC x 1-1/4	BM-FL-601-W66
		7251	.97	1.28	.28	.63	1.86	2.20	.72	1.59	.34	33.00			
19	3/4	500	32,5	42	8	20	60	71	23,8	50,8	10,5	30,1	M10x35	3/8–16 UNC x 1-1/2	BM-FL-602-W66
		7251	1.28	1.65	.31	.79	2.36	2.80	.94	2.00	.41	66.22			
25	1	500	38,8	48,4	9	25	69,6	81	27,8	57,2	13	49,0	M12x45		BM-FL-603-M-W66
		7251	1.53	1.91	.35	.98	2.74	3.19	1.09	2.25	.51	107.80			
32	1-1/4	500	44,5	54,8	9,8	27	77,2	95	31,8	66,6	15	71,5	M14x45		BM-FL-604-M14-W66
		7251	1.75	2.16	.39	1.06	3.04	3.74	1.25	2.62	.59	157.30			
38	1-1/2	500	51,6	64,3	12	30	89,4	113	36,5	79,3	17	118,9	M16x55	5/8–11 UNC x 2-1/4	BM-FL-605-W66
		7251	2.03	2.53	.47	1.18	3.52	4.45	1.44	3.12	.67	261.58			
51	2	500	67,6	80,2	12	37	113,4	133	44,5	96,8	21	187,4	M20x70	3/4–10 UNC x 2-3/4	BM-FL-606-W66
		7251	2.66	3.16	.47	1.46	4.46	5.24	1.75	3.81	.83	412.28			
64	2-1/2	500	89,5	108,5	20	48	150	166	58,7	123,8	25	187,4	M24x80		BM-FL-607-M-W66[3]
		7251	3.52	4.27	.79	1.89	5.91	6.54	2.31	4.87	.98	412.28			
76	3	500	114,5	132,5	25	58	178	210	71,4	152,4	32	392,0	M30x90		BM-FL-608-M-W66[3]
		7251	4.51	5.22	.98	2.28	7.01	8.27	2.81	6.00	1.26	862.40			

[1] The maximum working pressure PN (bar/PSI) applies only to the flange itself and depends on the bolts used (Grade 10.9). The actual maximum working pressure depends on the thickness and the quality of the tube used.

[2] Dimensions of screw holes in part different to the ISO to match both Metric and UNC bolts.

[3] Made of steel C45 or equivalent, zinc-plated and thick-film-passivated.

Materials / Ordering Options / Examples

* Flange Clamp (Flat Style) made of Steel C55 or equivalent, zinc-plated and thick-film-passivated — **BM-FL-...-W66**

* Kit including Metric bolts 10.9, spring rings, O-ring made of NBR (Buna-N®) — **BM-FL-...-M-B-W130-K**
* Kit including Metric bolts 10.9, spring rings, O-ring made of FKM (Viton®) — **BM-FL-...-M-V-W130-K**

* Kit including UNC bolts (Grade 8), spring rings, O-ring made of NBR (Buna-N®) — **BM-FL-...-U-B-W129-K**

A

SAE Flange Clamp with Metric Tapped Holes
Type BM-G ▪ 3000 / 6000 PSI Series



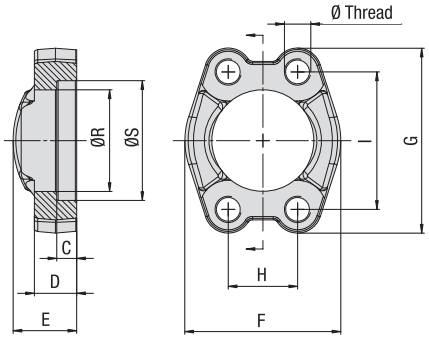

3000 PSI Standard Pressure Series (according to ISO 6162-1:2012)

Nominal Size		PN[1] (bar/PSI)	Dimensions (mm/in)									Weight (kg/lbs) ca.	Ø Thread [2]	Ordering Codes
DN	(in)	10.9	ØR	ØS	C	D	E	F	G	H	I	per 100		
13	1/2	350	24,3	31	6,2	13	19	46	54	17,5	38,1	13,9	M8	BM-G-301-W66
		5075	.96	1.22	.24	.51	.75	1.81	2.13	.69	1.50	30.58		
19	3/4	350	32,2	38,9	6,2	14	22	52	65	22,3	47,6	19,0	M10	BM-G-302-W66
		5075	1.27	1.53	.24	.55	.87	2.05	2.56	.88	1.87	41.80		
25	1	345	38,5	45,3	7,5	16	24	59	70	26,2	52,4	24,4	M10	BM-G-303-W66
		5003	1.52	1.78	.30	.63	.94	2.32	2.76	1.03	2.06	53.68		
32	1-1/4	280	43,7	51,6	7,5	14	22	73	79,5	30,2	58,7	32,1	M10 (M12)	BM-G-304-W66
		4061	1.72	2.03	.30	.55	.87	2.87	3.13	1.19	2.31	70.62		
38	1-1/2	210	50,8	61,1	7,5	16	25	83	94	35,7	69,9	49,0	M12 (M14)	BM-G-305-W66
		3045	2.00	2.41	.30	.63	.98	3.27	3.70	1.41	2.75	107.80		
51	2	210	62,8	72,3	9	16	26	97	102	42,9	77,8	55,5	M12 (M14)	BM-G-306-W66
		3045	2.47	2.85	.35	.63	1.02	3.82	4.02	1.69	3.06	122.10		
64	2-1/2	175	74,9	84,9	9	19	38	109	114,5	50,8	88,9	94,9	M12 (M14)	BM-G-307-W66
		2538	2.95	3.34	.35	.75	1.50	4.29	4.51	2.00	3.50	208.78		
76	3	160	90,9	102,4	9	22	41	131	135	61,9	106,4	138,1	M16	BM-G-308-W66
		2320	3.58	4.03	.35	.87	1.61	5.16	5.31	2.44	4.19	303.82		
89	3-1/2	35	102,4	115,1	10,7	22	28	140	152	69,9	120,7	132,5	M16	BM-G-309-W66
		508	4.03	4.53	.42	.87	1.10	5.51	5.98	2.75	4.75	291.50		
102	4	35	115	127,8	10,7	25	35	152	162	77,8	130,2	174,8	M16	BM-G-310-W66
		508	4.53	5.03	.42	.98	1.38	5.98	6.38	3.06	5.13	384.56		
127	5	35	140,5	153,2	10,7	28	41	181	184	92,1	152,4	256,0	M16	BM-G-311-W66
		508	5.53	6.03	.42	1.10	1.61	7.13	7.24	3.63	6.00	563.20		

6000 PSI High Pressure Series (according to ISO 6162-2:2012)

500 bar / 7251 PSI

Nominal Size		PN[1] (bar/PSI)	Dimensions (mm/in)									Weight (kg/lbs) ca.	Ø Thread	Ordering Codes
DN	(in)	10.9	ØR	ØS	C	D	E	F	G	H	I	per 100		
13	1/2	500	24,6	32,5	7,2	16	22	48	56,5	18,2	40,5	18,3	M8	BM-G-601-W66
		7251	.97	1.28	.28	.63	.87	1.89	2.22	.72	1.59	40.26		
19	3/4	500	32,5	42	8,2	19	28	60	71	23,8	50,8	34,0	M10	BM-G-602-W66
		7251	1.28	1.65	.32	.75	1.10	2.36	2.80	.94	2.00	74.80		
25	1	500	38,8	48,4	9	24	33	70	81	27,8	57,2	57,4	M12	BM-G-603-W66
		7251	1.53	1.91	.35	.94	1.30	2.76	3.19	1.09	2.25	126.28		
32	1-1/4	500	44,5	54,8	9,8	27	38	78	95	31,8	66,6	82,9	M12	BM-G-604-W66
		7251	1.75	2.16	.39	1.06	1.50	3.07	3.74	1.25	2.62	182.38		
32	1-1/4	500	44,5	54,8	9,8	27	38	78	95	31,8	66,6	85,4	M14	BM-G-604-M14-W66
		7251	1.75	2.16	.39	1.06	1.50	3.07	3.74	1.25	2.62	187.88		
38	1-1/2	500	51,6	64,3	12	30	43	95	113	36,5	79,3	143,4	M16	BM-G-605-W66
		7251	2.03	2.53	.47	1.18	1.69	3.74	4.45	1.44	3.12	315.48		
51	2	500	67,6	80,2	12	37	52	114	133	44,5	96,8	218,8	M20	BM-G-606-W66
		7251	2.66	3.16	.47	1.46	2.05	4.49	5.24	1.75	3.81	481.36		
64	2-1/2	500	89,5	108,5	20	48	48	150	175	58,7	123,8	403,8	M24	BM-G-607-W66
		7251	6,2	7,5	1,4	3,3	3,3	10,3	12,1	4,0	8,5	888.36		
76	3	420	114,5	132,5	25	58	58	178	210	71,4	152,4	704,2	M30	BM-G-608-W66
		6090	7,9	9,1	1,7	4,0	4,0	12,3	14,5	4,9	10,5	1549.24		

Materials / Ordering Options / Examples

- * Flange Clamp with Metric tapped holes made of Steel S355J2 / C45 or equivalent, zinc-plated and thick-film-passivated — **BM-G-...-W66**
- * Flange Clamp with Metric tapped holes made of Steel S355J2 / C45 or equivalent, zinc/nickel-plated (on request) — **BM-G-...-W3**
- * Flange Clamp with Metric tapped holes made of Stainless Steel V4A – 1.4404 (on request) — **BM-G-..-W5**
- * Size of Metric tapped holes deviating from the standard (e.g. M14) — **BM-G-...-M14-W66**

[1] The maximum working pressure PN (bar/PSI) applies only to the flange itself and depends on the bolts used (Grade 10.9). The actual maximum working pressure depends on the thickness and the quality of the tube used.

[2] Alternative options shown in brackets are available on request.