

ESM-4450 48 x 48 1/16 DIN Universal Input PID Process Controller with Smart I/O Module System

- *4 digits process (PV) and 4 digits process set (SV) display*
- *Universal process input (TC, RTD, mV⎓ , V⎓ , mA⎓)*
- *Optional secondary sensor input*
- *Dual or multi point calibration for ⎓Voltage / Current input*
- *Configurable ON/OFF, P, PI, PD and PID control forms*
- *Adaptation of PID coefficients to the system with Auto-tune and Self-tune*
- *Manual/Automatic mode selection for control outputs*
- *Bumpless transfer*
- *Smart I/O module system*
- *Programmable heating, cooling and alarm functions for control outputs*
- *Motorized valve control function*
- *8 steps profile control (Ramp & Soak) function and start-hold-stop by using logic input module*
- *Remote set point function by using analogue input modules*
- *Retransmission of process value or process control by using 0/4...20 mA⎓ Current Output Module*
- *Detection of heater failure by using 0...5A ⏦CT input module*
- *Hardware configuration by using input/output modules*
- *RS-232 (standard) or RS-485 (optional) serial communication with Modbus RTU protocol*

ABOUT INSTRUCTION MANUAL

Instruction manual of ESM-4450 Process Controller consists of two main sections. Explanation of these sections are below. Also, there are other sections which include order information and technical specifications of the device. All titles and page numbers in instruction manual are in "**CONTENTS**" section. User can reach to any title with section number.

Installation:

In this section, physical dimensions of the device, panel mounting, electrical wiring, module mounting to the device, physical and electrical installation of the device to the system are explained.

Operation and Parameters:

In this section, user interface of the device, how to access to the parameters, description of the parameters are explained.

Also in these sections, there are warnings to prevent serious injury while doing the physical and electrical mounting or using the device.

Explanation of the symbols which are used in these sections are given below.



This symbol is used for safety warnings. User must pay attention to these warnings.



This symbol is used to determine the dangerous situations as a result of an electric shock. User must pay attention to these warnings definitely.



This symbol is used to determine the important notes about functions and usage of the device.

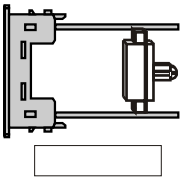

In parameters section, for making relevant parameters to be active, determined module must be installed to Module-1 or Module-2 socket.

CONTENTS

1.PREFACE..... Page 6
- 1.1 GENERAL SPECIFICATIONS
- 1.2 ORDERING INFORMATION
- 1.3 WARRANTY
- 1.4 MAINTENANCE

2.INSTALLATION..... Page 9
- 2.1 GENERAL DESCRIPTION
- 2.2 DIMENSIONS
- 2.3 PANEL CUT-OUT
- 2.4 ENVIRONMENTAL RATINGS
- 2.5 PANEL MOUNTING
- 2.6 INSTALLATION FIXING CLAMP
- 2.7 REMOVING FROM THE PANEL

3.ELECTRICAL WIRINGS..... Page 14
- 3.1 TERMINAL LAYOUT AND CONNECTION INSTRUCTIONS
- 3.2 ELECTRICAL WIRING DIAGRAM
- 3.3 SUPPLY VOLTAGE INPUT CONNECTION OF THE DEVICE
- 3.4 PROCESS INPUT CONNECTION
  - 3.4.1 TC (THERMOCOUPLE) CONNECTION
  - 3.4.2 RTD CONNECTION
  - 3.4.3 PROCESS INPUT CONNECTION OF SERIAL TRANSMITTERS WITH CURRENT OUTPUT (LOOP POWERED)
  - 3.4.4 PROCESS INPUT CONNECTION OF 3-WIRE TRANSMITTERS WITH CURRENT OUTPUT
  - 3.4.5 CONNECTION OF TRANSMITTERS WITH VOLTAGE OUTPUT TO PROCESS INPUT
- 3.5 RELAY OUTPUT CONNECTION
- 3.6 GALVANIC ISOLATION TEST VALUES OF ESM-4450 PROCESS CONTROLLER AND INPUT/OUTPUT MODULES

4.DEFINITIONS AND SPECIFICATIONS OF MODULES..... Page 21
- 4.1 INPUT MODULES
  - 4.1.1 EMI-400 DIGITAL INPUT MODULE
  - 4.1.2 EMI-410 0/4...20mA⎓CURRENT INPUT MODULE
  - 4.1.3 EMI-420 0...5A ∿CT INPUT MODULE
  - 4.1.4 EMI-430 TC OR 0...50mV⎓INPUT MODULE
  - 4.1.5 EMI-440 PT-100 INPUT MODULE
  - 4.1.6 EMI-450 0...10V⎓INPUT MODULE
- 4.2 OUTPUT MODULES
  - 4.2.1 EMO-400 RELAY OUTPUT MODULE
  - 4.2.2 EMO-410 SSR DRIVER OUTPUT MODULE
  - 4.2.3 EMO-420 DIGITAL (TRANSISTOR) OUTPUT MODULE
  - 4.2.4 EMO-430 0/4 ...20mA⎓ CURRENT OUTPUT MODULE
- 4.3 INSTALLING AND PULLING OUT INPUT/OUTPUT MODULES
- 4.4 TO STICK INPUT/OUTPUT MODULES' LABELS TO THE DEVICE

5.CONNECTION TERMINALS OF INPUT/OUTPUT MODULES AND CONNECTION WIRINGS..... Page 30
- 5.1 CONNECTION WIRINGS FOR INPUT MODULES
  - 5.1.1 CONNECTION OF EMI-400 DIGITAL INPUT MODULE
  - 5.1.2 CONNECTION OF 3-WIRE TRANSMITTER TO EMI-410 0/4...20mA⎓ CURRENT INPUT MODULE
  - 5.1.3 CONNECTION OF SERIAL TRANSMITTER (LOOP POWERED) TO EMI-410 0/4...20mA⎓ CURRENT INPUT MODULE
  - 5.1.4 CURRENT TRANSFORMER CONNECTION TO EMI-420 0...5A∿ CT INPUT MODULE
  - 5.1.5 CONNECTION OF EMI-430 TC OR 0...50mV⎓ INPUT MODULE
  - 5.1.6 USING EMI-430 TC or 0...50mV⎓ INPUT MODULE AS 0...50mV⎓ INPUT

5.1.7 CONNECTION OF EMI-440 PT-100 INPUT MODULE
5.1.8 CONNECTION OF EMI-450 0...10V⎓ INPUT MODULE

5.2 CONNECTION WIRINGS FOR OUTPUT MODULES
5.2.1 EMO-400 RELAY OUTPUT MODULE CONNECTION
5.2.2 EMO-410 SSR DRIVER MODULE CONNECTION
5.2.3 EMO-420 DIGITAL (TRANSISTOR) OUTPUT MODULE CONNECTION
5.2.4 EMO-430 0/4 ...20mA⎓ CURRENT OUTPUT MODULE CONNECTION
5.2.5 TO GET 0...10V⎓ WITH EMO-430 0/4 ...20mA⎓ CURRENT OUTPUT MODULE

6.CONNECTIONS FOR RS-232 / RS-485 SERIAL COMMUNICATION..... Page 37
6.1 CABLE CONNECTION BETWEEN RS-232 TERMINAL OF THE DEVICE AND PC
6.2 CONNECTION FOR RS-485 SERIAL COMMUNICATION
6.3 INSTALLING RS-232 / RS-485 SERIAL COMMUNICATION MODULES TO THE DEVICE

7.DEFINITION OF FRONT PANEL AND ACCESSING TO THE PARAMETERS..... Page 41
7.1 DEFINITION OF FRONT PANEL
7.2 OBSERVATION OF OPTIONAL MODULES AND SOFTWARE REVISION ON THE DISPLAYS
7.3 ADJUSTMENT OF PROCESS SET VALUE
7.4 EASY ACCESS DIAGRAM FOR OPERATOR PARAMETERS
7.5 EASY ACCESS DIAGRAM FOR TECHNICIAN PARAMETERS
7.6 EASY ACCESS DIAGRAM FOR “IOP1 CONF” AND “IOP2 CONF” PARAMETERS
7.7 ACCESSING TO THE OPERATOR MENU
7.8 ACCESSING TO THE TECHNICIAN MENU
7.9 ADJUSTMENT OF ALARM SET VALUES
7.10 CHANGING AND SAVING PARAMETER VALUES

8.PARAMETERS..... Page 65
8.1 OPERATOR PARAMETERS
8.1.1 PROCESS AND ALARM SET PARAMETERS
8.1.2 SELECTION OF PID TUNE AND OPERATION FORM
8.1.3 FUNCTION SELECTION FOR TOP AND BOTTOM DISPLAY
8.1.4 CONFIGURATION OF RAMP/SOAK FUNCTION AND STEP SET VALUES

8.2 TECHNICIAN PARAMETERS
8.2.1 PROCESS INPUT TYPE AND RELEVANT PARAMETERS WITH PROCESS INPUT
8.2.2 PID CONFIGURATION PARAMETERS
8.2.3 MODULE-1 CONFIGURATION PARAMETERS
8.2.4 MODULE-2 CONFIGURATION PARAMETERS
8.2.5 OUTPUT-3 CONFIGURATION PARAMETERS
8.2.6 GENERAL PARAMETERS
8.2.7 PARAMETERS FOR CONFIGURATION OF SERIAL COMMUNICATION
8.2.8 OPERATOR AND TECHNICIAN PASSWORDS

9.FAILURE MESSAGES IN ESM-4450 PROCESS CONTROLLERS..... Page 122

10.SPECIFICATIONS..... Page 124

11.OTHER INFORMATION..... Page 125

EU DECLARATION OF CONFORMITY

Manufacturer Company Name : Emko Elektronik A.S.

Manufacturer Company Address: DOSAB, Karanfil Sokak, No:6, 16369 Bursa, Turkiye

The manufacturer hereby declares that the product conforms to the following standards and conditions.

Product Name : Process Controller

Model Number : ESM-4450

Type Number : ESM-4450

Product Category : Electrical equipment for measurement, control and laboratory use

Conforms to the following directives :

2006 / 95 / EC The Low Voltage Directive

2004 / 108 / EC The Electromagnetic Compatibility Directive

has been designed and manufactured to the following specifications :

EN 61000-6-4:2007 EMC Generic Emission Standard for the Industrial Environments

EN 61000-6-2:2005 EMC Generic Immunity Standard for the Industrial Environments

EN 61010-1:2001 Safety Requirements for electrical equipment for measurement, control And laboratory use

---

When and Where Issued

16th October 2009

Bursa-TURKEY

Authorized Signature

Name : Serpil YAKIN

Position : Quality Manager

1.Preface

ESM series process controllers are designed for measuring and controlling temperature and any process value.They can be used in many applications with their universal process input, multifunction control outputs, selectable alarm functions, serial communication unit and input/output modules.

Some application fields and applications which they are used are below:

Application Fields	Applications
Glass	Motorized valve control
Plastic	Profile Control
Petro-Chemistry	PID Process Control
Textile	Heater Failure detection
Automative	
Machine production industries	

1.1 General Specifications

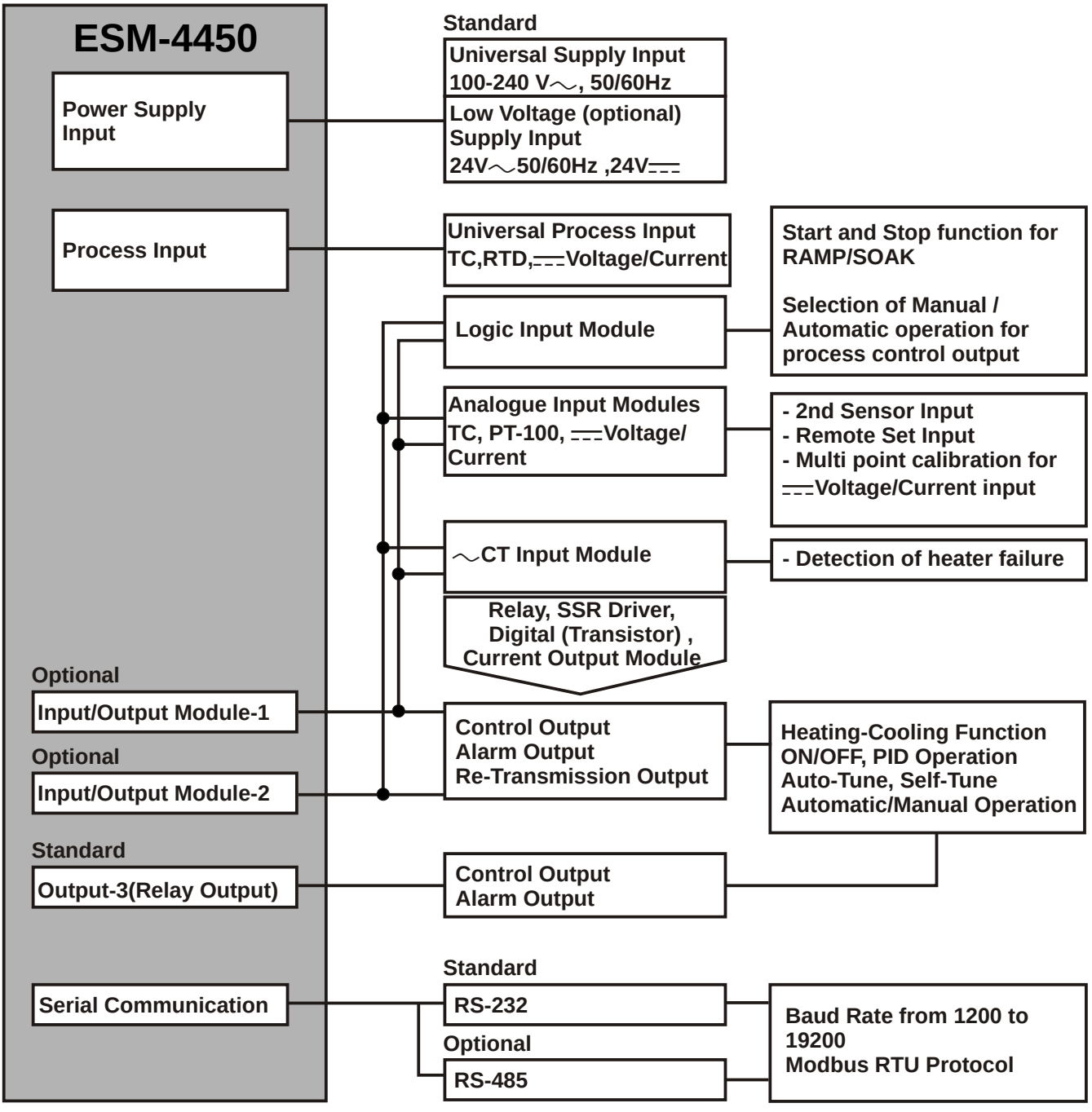

1.2 Ordering Information

ESM-4450 (48x48 1/16 DIN)	A	BC	D	E	/	FG	HI	/	U	V	W	Z
				1	/			/				

A	Supply Voltage
1	100-240V∼ (-15%;+10%) 50/60Hz
2	24 V∼ (-15%;+10%) 50/60Hz 24V⎓ (-15%;+10%)
9	Customer (Maximum 240V∼ (-15%;+10%))50/60Hz

BC	Input Type	Scale
20	Configurable **(Table-1)**	**Table-1**

D	Serial Communication	Product Code
0	None	-
1	RS-232	EMC-400
2	RS-485	EMC-410

E	Output-1
1	Relay Output (5A@ 250V∼ at resistive load)

FG	Module-1	Product Code
00	None	-
01	Relay Output Module	EMO-400
02	SSR Driver Output Module	EMO-410
03	Digital (Transistor) Output Module	EMO-420
04	Current Output Module (0/4 ...20 mA⎓)	EMO-430
07	Digital Input Module	EMI-400
08	0/4...20 mA⎓Current Input Module	EMI-410
09	0...5A ∼CT Input Module	EMI-420
10	TC or 0...50mV⎓ Input Module	EMI-430
11	PT-100 Input Module	EMI-440
12	0...10 V⎓ Input Module	EMI-450

HI	Module-2	Product Code
00	None	-
01	Relay Output Module	EMO-400
02	SSR Driver Output Module	EMO-410
03	Digital (Transistor) Output Module	EMO-420
04	Current Output Module (0/4 ...20 mA⎓)	EMO-430
07	Digital Input Module	EMI-400
08	0/4...20 mA⎓ Current Input Module	EMI-410
09	0...5A ∼CT Input Module	EMI-420
10	TC or 0...50mV⎓ Input Module	EMI-430
11	PT-100 Input Module	EMI-440
12	0...10 V⎓ Input Module	EMI-450

Table-1

BC	Input Type(TC)	Scale(°C)	Scale(°F)
21	L ,Fe Const DIN43710	-100°C,850°C	-148°F ,1562°F
22	L ,Fe Const DIN43710	-100.0°C,850.0°C	-148.0°F,999.9°F
23	J ,Fe CuNi IEC584.1(ITS90)	-200°C,900°C	-328°F,1652°F
24	J ,Fe CuNi IEC584.1(ITS90)	-199.9°C,900.0°C	-199.9°F,999.9°F
25	K ,NiCr Ni IEC584.1(ITS90)	-200°C,1300°C	-328°F,2372°F
26	K ,NiCr Ni IEC584.1(ITS90)	-199.9°C,999.9°C	-199.9°F,999.9°F
27	R ,Pt13%Rh Pt IEC584.1(ITS90)	0°C,1700°C	32°F,3092°F
28	S ,Pt10%Rh Pt IEC584.1(ITS90)	0°C,1700°C	32°F,3092°F
29	T ,Cu CuNi IEC584.1(ITS90)	-200°C,400°C	-328°F,752°F
30	T ,Cu CuNi IEC584.1(ITS90)	-199.9°C,400.0°C	-199.9°F,752.0°F
31	B ,Pt30%Rh Pt6%Rh IEC584.1(ITS90)	44°C,1800°C	111°F,3272°F
32	B ,Pt30%Rh Pt6%Rh IEC584.1(ITS90)	44.0°C,999.9°C	111.0°F,999.9°F
33	E ,NiCr CuNi IEC584.1(ITS90)	-150°C,700°C	-238°F,1292°F
34	E ,NiCr CuNi IEC584.1(ITS90)	-150.0°C,700.0°C	-199.9°F,999.9°F
35	N ,Nicrosil Nisil IEC584.1(ITS90)	-200°C,1300°C	-328°F,2372°F
36	N ,Nicrosil Nisil IEC584.1(ITS90)	-199.9°C,999.9°C	-199.9°F,999.9°F
37	C , (ITS90)	0°C,2300°C	32°F,3261°F
38	C , (ITS90)	0.0°C,999.9°C	32.0°F,999.9°F

BC	Input Type(RTD)	Scale(°C)	Scale(°F)
39	PT 100 , IEC751(ITS90)	-200°C,650°C	-328°F,1202°F
40	PT 100 , IEC751(ITS90)	-199.9°C,650.0°C	-199.9°F,999.9°F

BC	Input Type (⎓ Voltage and Current)	Scale	
41	0...50 mV⎓	-1999	9999
42	0...5 V⎓	-1999	9999
43	0...10 V⎓	-1999	9999
44	0...20 mA⎓	-1999	9999
45	4...20 mA⎓	-1999	9999

All order information of ESM-4450 are given on the table at left. User may form appropriate device configuration from information and codes that at the table and convert it to the ordering codes.

Firstly, supply voltage then input/output modules and other specifications must be determined. Please fill the order code blanks according to your needs.

Please contact us, if your needs are out of the standards.



∼ Vac

⎓ Vdc

≂ Vdc or Vac can be applied

1.3 Warranty

EMKO Elektronik warrants that the equipment delivered is free from defects in material and workmanship. This warranty is provided for a period of two years. The warranty period starts from the delivery date. This warranty is in force if duty and responsibilities which are determined in warranty document and instruction manual performs by the customer completely.

1.4 Maintenance

Repairs should only be performed by trained and specialized personnel. Cut power to the device before accessing internal parts.
Do not clean the case with hydrocarbon-based solvents (Petrol, Trichlorethylene etc.). Use of these solvents can reduce the mechanical reliability of the device. Use a cloth dampened in ethyl alcohol or water to clean the external plastic case.

2.Installation



Before beginning installation of this product, please read the instruction manual and warnings below carefully.

In package ,
- One piece unit
- Two piece mounting clamp
- One piece instruction manual

A visual inspection of this product for possible damage occured during shipment is recommended before installation. It is your responsibility to ensure that qualified mechanical and electrical technicians install this product.

If there is danger of serious accident resulting from a failure or defect in this unit, power off the system and separate the electrical connection of the device from the system.

The unit is normally supplied without a power switch or a fuse. Use power switch and fuse as required.

Be sure to use the rated power supply voltage to protect the unit against damage and to prevent failure.

Keep the power off until all of the wiring is completed so that electric shock and trouble with the unit can be prevented.

Never attempt to disassemble, modify or repair this unit. Tampering with the unit may results in malfunction, electric shock or fire.

Do not use the unit in combustible or explosive gaseous atmospheres.

During the equipment is putted in hole on the metal panel while mechanical installation some metal burrs can cause injury on hands, you must be careful.

Montage of the product on a system must be done with it's own fixing clamps. Do not do the montage of the device with inappropriate fixing clamps. Be sure that device will not fall while doing the montage.

It is your responsibility if this equipment is used in a manner not specified in this instruction manual.

2.1 General Description

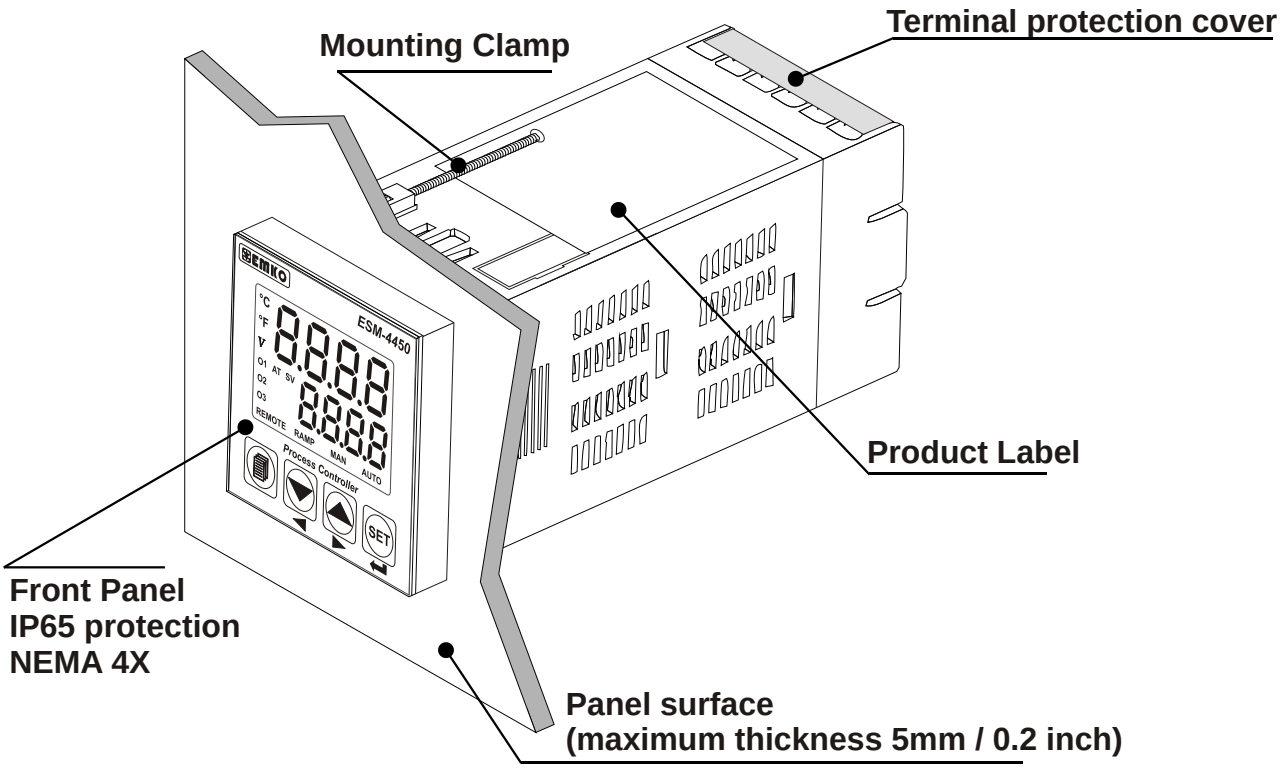

2.2 Dimensions

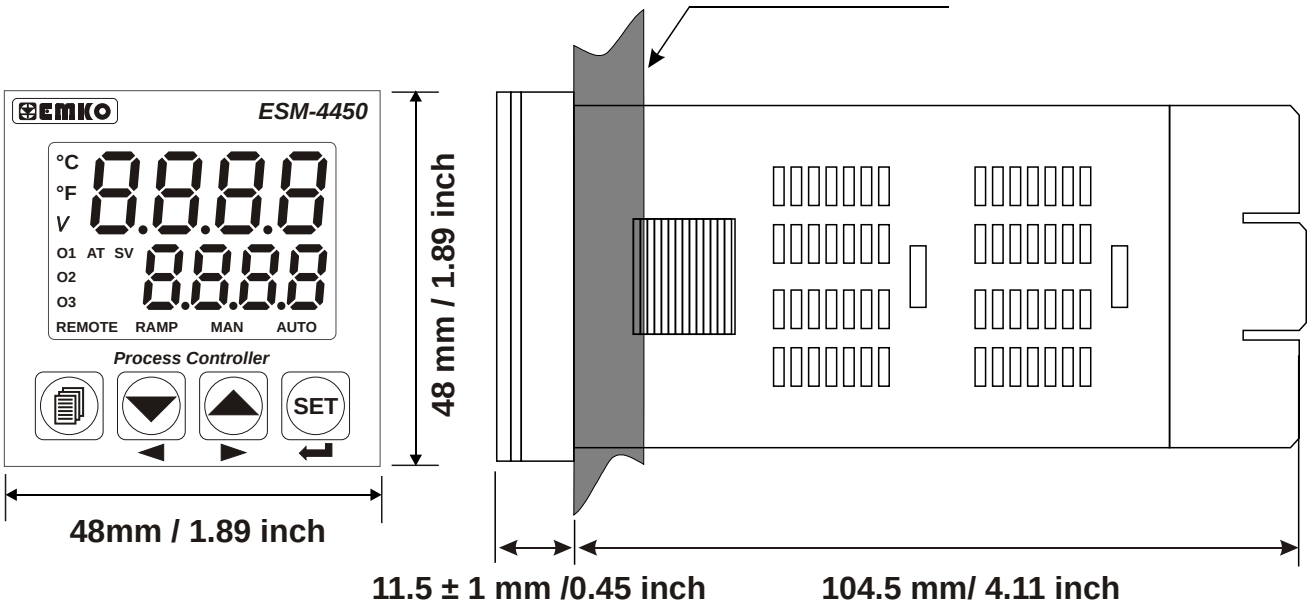

2.3 Panel Cut-Out

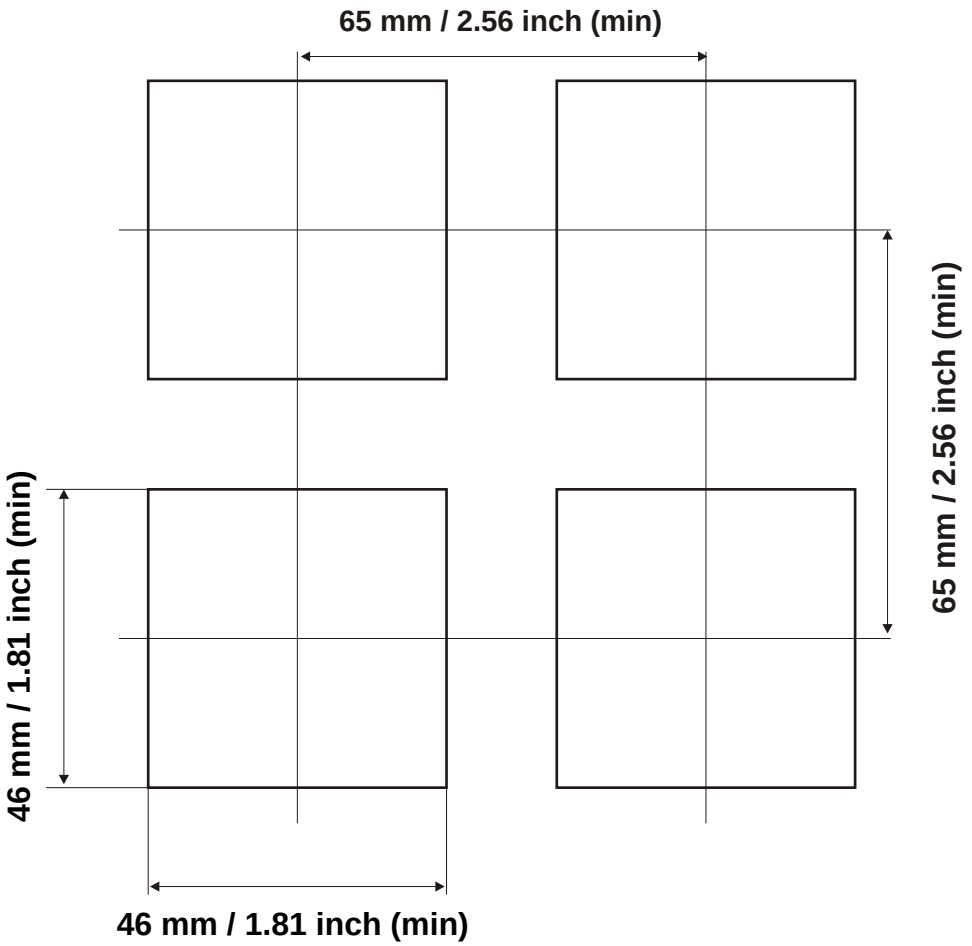

2.4 Environmental Ratings

Operating Conditions

Operating Temperature **:** 0 to 50 °C

Max. Operating Humidity : 90% Rh (non-condensing)

Altitude **:** Up to 2000m.

Forbidden Conditions:
Corrosive atmosphere
Explosive atmosphere
Home applications (The unit is only for industrial applications)

2.5 Panel Mounting

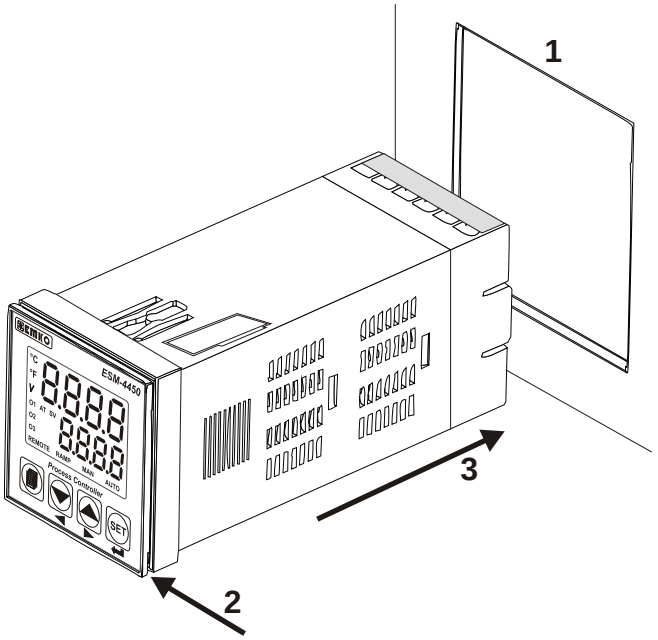

1-Before mounting the device in your panel, make sure that the cut-out is of the right size.

2-Check front panel gasket position

3-Insert the device through the cut-out. If the mounting clamp are on the unit, put out them before inserting the unit to the panel.

During installation into a metal panel, care should be taken to avoid injury from metal burrs which might be present. The equipment can loosen from vibration and become dislodged if installation parts are not properly tightened. These precautions for the safety of the person who does the panel mounting.

2.6 Installation Fixing Clamp

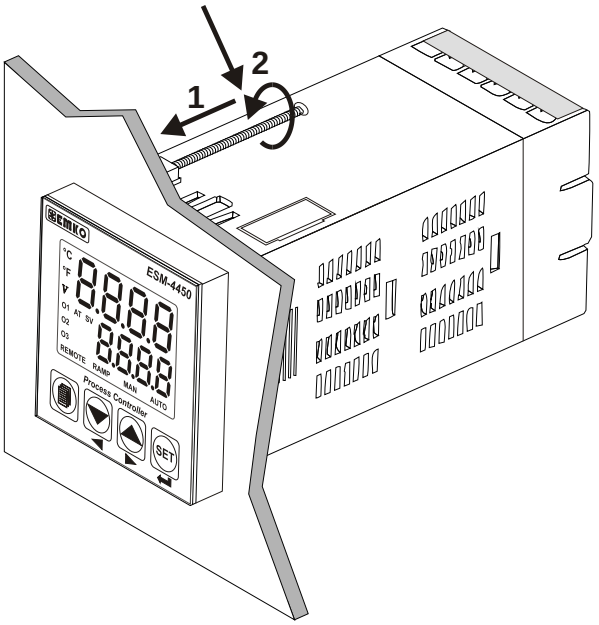

The unit is designed for panel mounting.

1-Insert the unit in the panel cut-out from the front side.

2-Insert the mounting clamp from the rear side of the unit and screw up the fixing screws until the unit completely immobile within the panel

Montage of the unit to a system must be done with it's own fixing clamps. Do not do the montage of the device with inappropriate fixing clamps. Be sure that device will not fall while doing the montage.

2.7 Removing from the Panel

Before starting to remove the unit from panel, power off the unit and the related system.

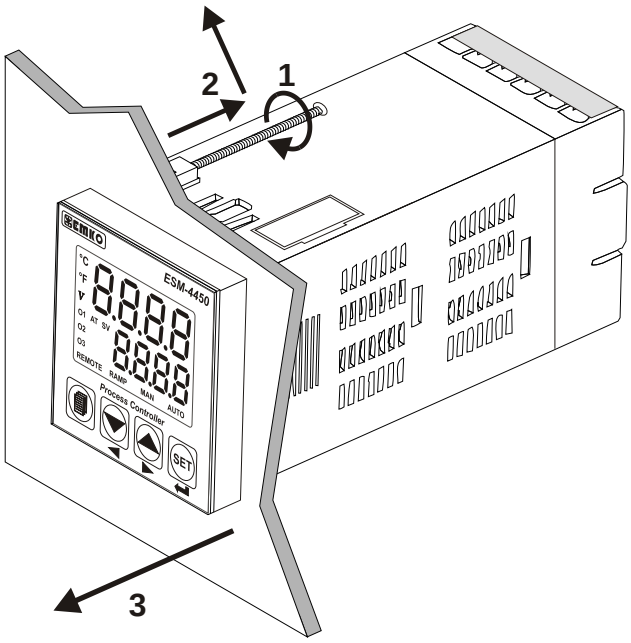

1-Loosen the screws.

2-Lift the locking tabs located on both the right and left hand sides and pull the fixing clamp from the device while holding the unit in place.

3-Pull the unit through the front side of the panel

3.Electrical Wirings

You must ensure that the device is correctly configured for your application. Incorrect configuration could result in damage to the process being controlled, and/or personal injury. It is your responsibility, as the installer, to ensure that the configuration is correct.
Device parameters has factory default values. These parameters must be set according to the system's needs.

Only qualified personnel and technicians should work on this equipment. This equipment contains internal circuits with voltage dangerous to human life. There is severe danger for human life in the case of unauthorized intervention.

Be sure to use the rated power supply voltage to protect the unit against damage and to prevent failure.

Keep the power off until all of the wiring is completed so that electric shock and trouble with the unit can be prevented.

3.1 Terminal Layout and Connection Instructions

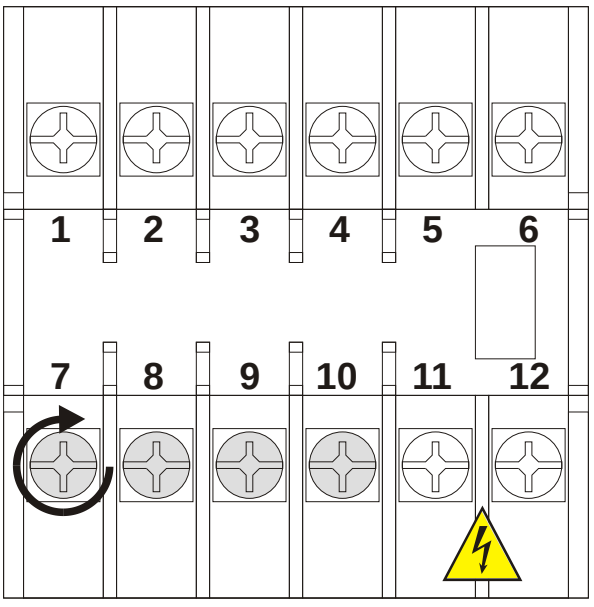

0.5 Nm

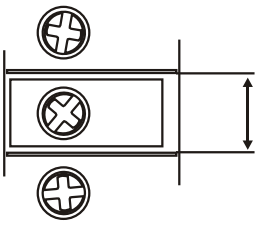

6 mm / 0.236 inch
Wire Size:
18 AWG / 1 mm²
Solid /Stranded



12 screws terminal M3



Optional connections

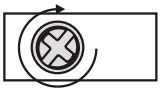

Torque 0.5 Nm

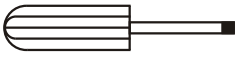

Screw driver 0.8x3mm

3.2 Electrical Wiring Diagram

Electrical wiring of the device must be the same as 'Electrical Wiring Diagram' below to prevent damage to the process being controlled and personnel injury.

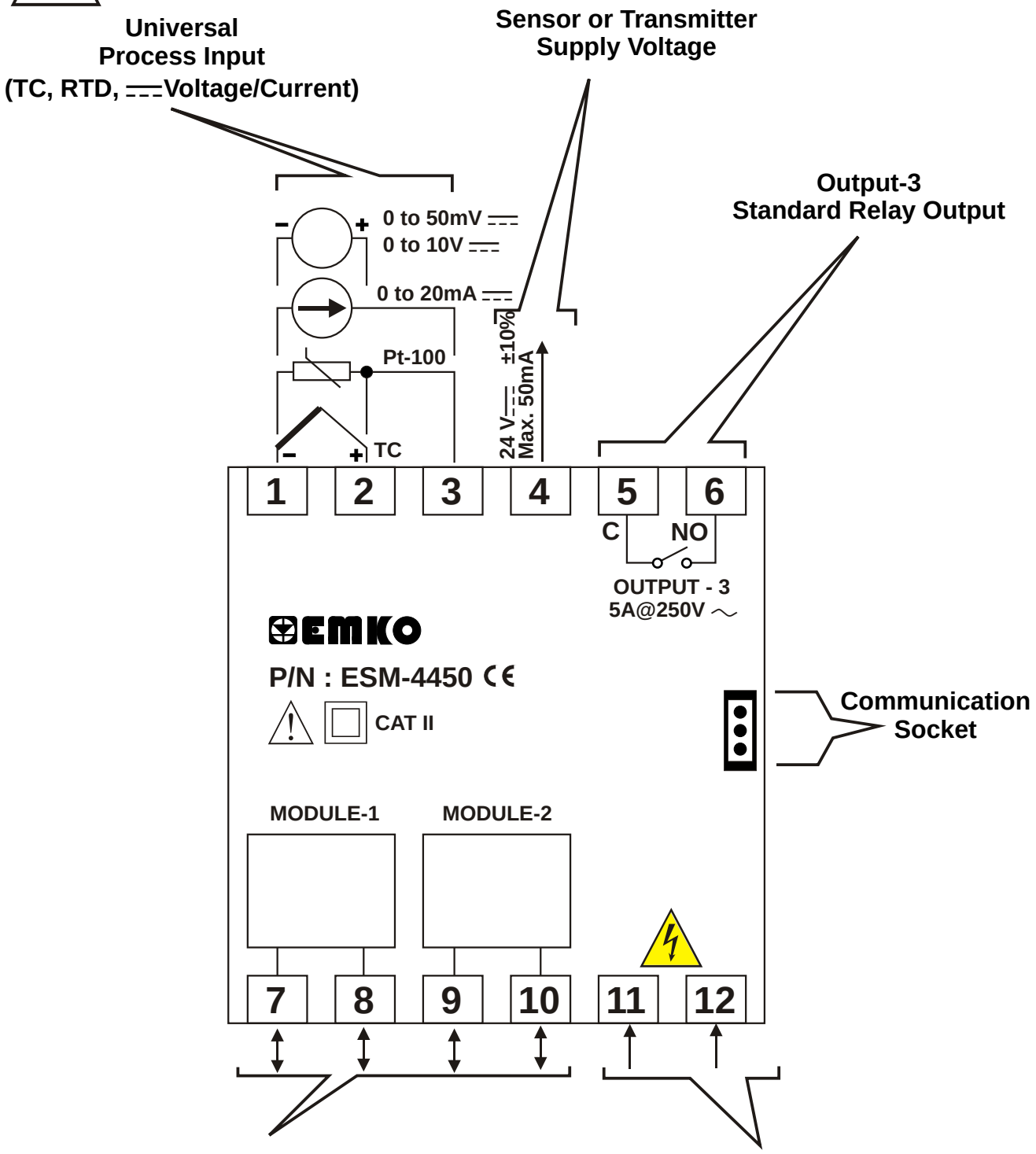

Optional Input/Output Module Terminals
Relay, SSR Driver, Digital or Current Output Module
Digital, Analogue and ~CT Input Modules

Supply Voltage Input
100-240V~(-15%;+10%) 50/60Hz - 6VA
24 V~(-15%;+10%) 50/60Hz - 6VA
24V⎓(-15%;+10%) - 6W
(It must be determined in order)

Process input, Analogue Module Inputs (EMI-410, EMI-430, EMI-440,EMI-450) and ~CT Module Input (EMI-420) are in CAT II class.

3.3 Supply Voltage Input Connection of the Devices

Connection of Universal Supply Voltage Input

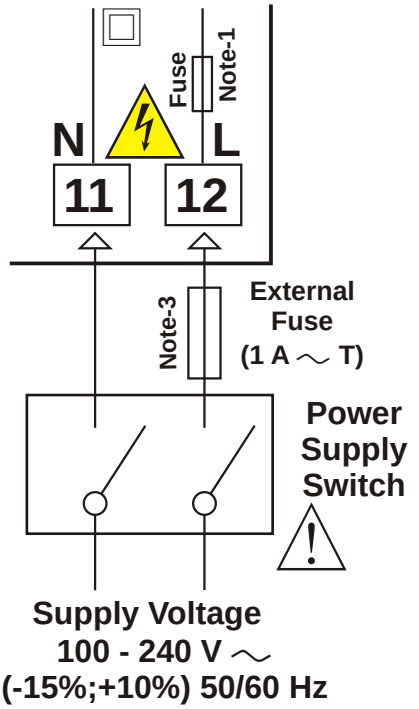

Connection of Low Voltage 24 V~ Supply Voltage Input

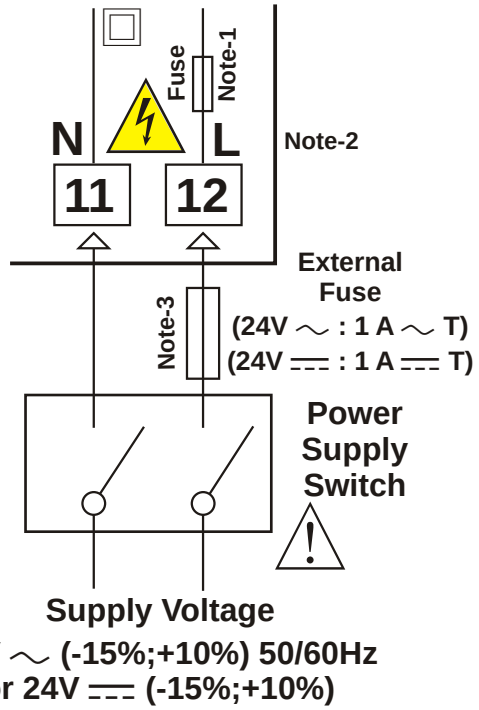

Note-1 : There is an internal 33R fusible flameproof resistor in 100-240 V~ 50/60Hz
There is an internal 4R7 fusible flameproof resistor in 24V~ 50/60Hz , 24V⎓
Note-2 : "L" is (+), "N" is (-) for 24V⎓ Supply Voltage
Note-3 : External Fuse is recommended.

Make sure that the power supply voltage is the same indicated on the instrument.

Switch on the power supply only after that all the electrical connections have been completed.

Supply voltage range must be determined in order. While installing the unit, supply voltage range must be controlled and appropriate supply voltage must be applied to the unit. Controlling prevents damages in unit and system and possible accidents as a result of incorrect supply voltage.

There is no power supply switch on the device. So a power supply switch must be added to the supply voltage input. In accordance with the safety regulations, the power supply switch shall bring the identification of the relevant instrument.Power supply switch shall be easily accessible by the user.

Power switch must be two poled for seperating phase and neutral. On/Off condition of power switch is very important in electrical connection. On/Off condition of power switch must be signed for preventing the wrong connection.

If an external fuse is used, it must be on phase connection in ~ supply input.

If an external fuse is used, it must be on (+) line connection in ⎓ supply input.

The instrument is protected with an internal fuse (Please refer to Note1 for information). In case of failure it is suggested to return the instrument to the manufacturer for repair.

3.4 Process Input Connection

3.4.1 TC (Thermocouple) Connection

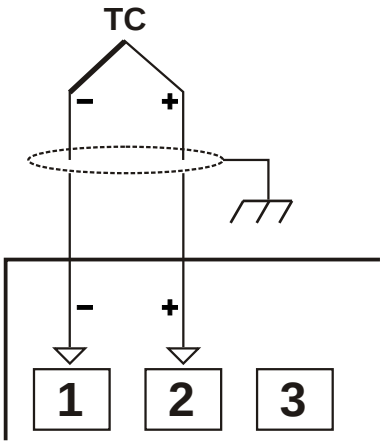

Connect the wires with the polarity as shown in the figure left.

Always use compensation wire corresponding to the thermocouple used. If present, the shield must be connected to a proper ground.

Input resistance is greater than 10M

3.4.2 RTD Connection

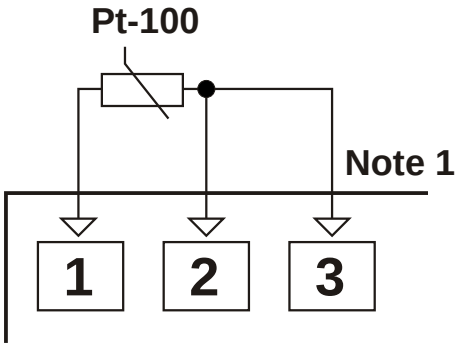

3-wire Pt-100 connection
(with line compensation)
(Max. Line impedance is 10)

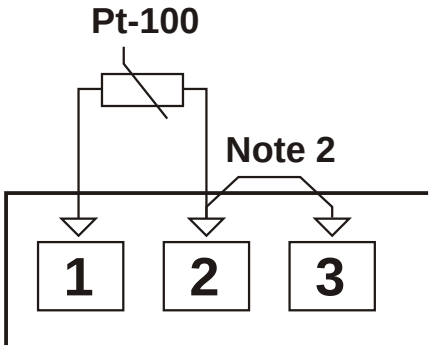

2-wire Pt-100 connection
(without line compensation)

Note 1 : In 3-wire system, use always cables of the same diameter (min 1mm²) Always use wires of the same gauge and type whether a 2-wire or 3-wire system.
Note 2 : Install a jumper between terminals 2 and 3 when using a 2-wire RTD.
Note 3 : If the distance is longer than 10 meters, use 3-wire system

Input resistance is greater than 10M

3.4.3 Process Input Connection of Serial Transmitters with Current Output (Loop Powered)

Transmitter connection by using supply voltage on the device

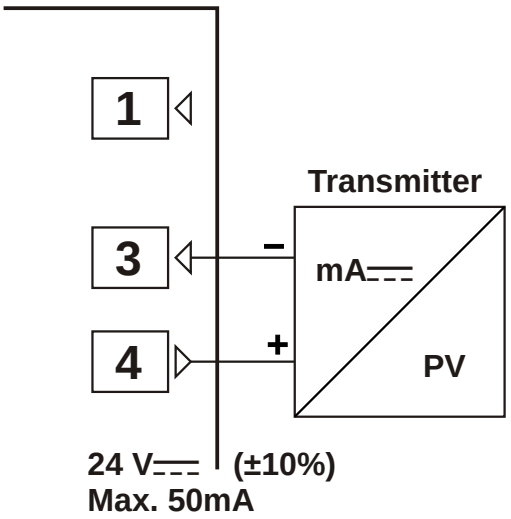

Transmitter connection by using external supply voltage source.

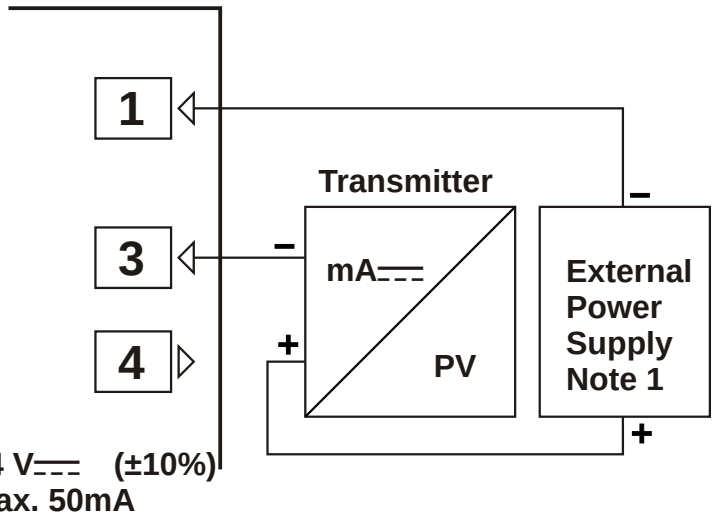

Note 1 : External power supply must be selected according to supply voltage range and required current for transmitter.

Input Resistance is 2R7 .

3.4.4 Process Input Connection of 3-Wire Transmitters with Current Output

Transmitter connection by using supply voltage on the device

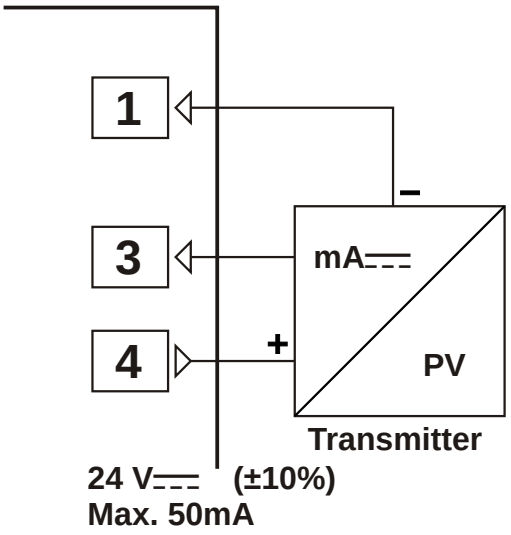

Transmitter connection by using external supply voltage source.

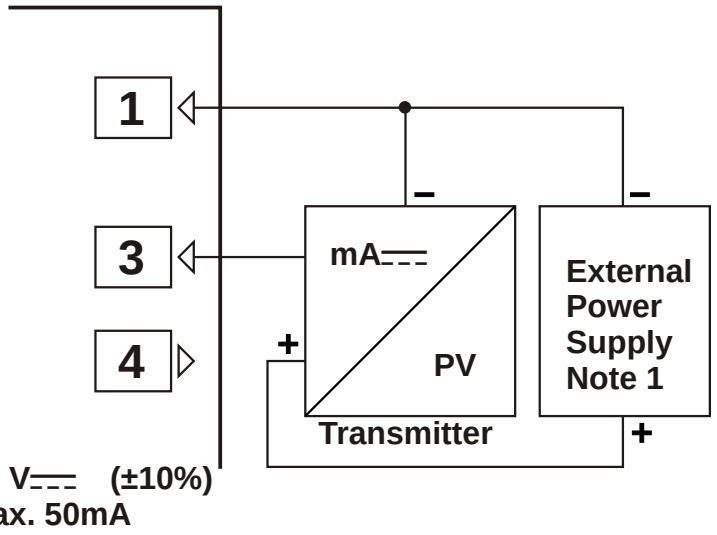

Note 1 : External power supply must be selected according to supply voltage range and required current for transmitter.

Input Resistance is 2R7 .

3.4.5 Connection of Transmitters with Voltage Output to Process Input

Transmitter connection by using supply voltage on the device

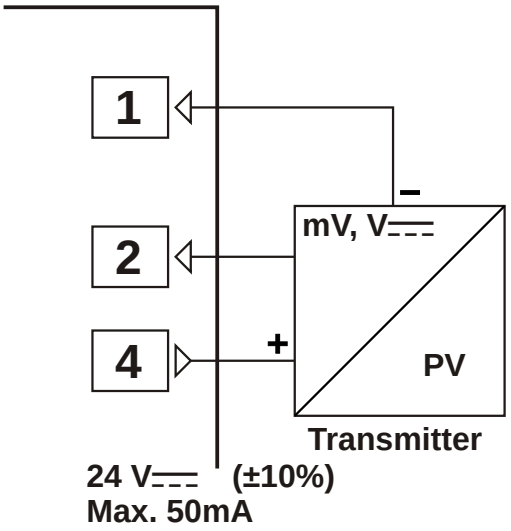

Transmitter connection by using external supply voltage source.

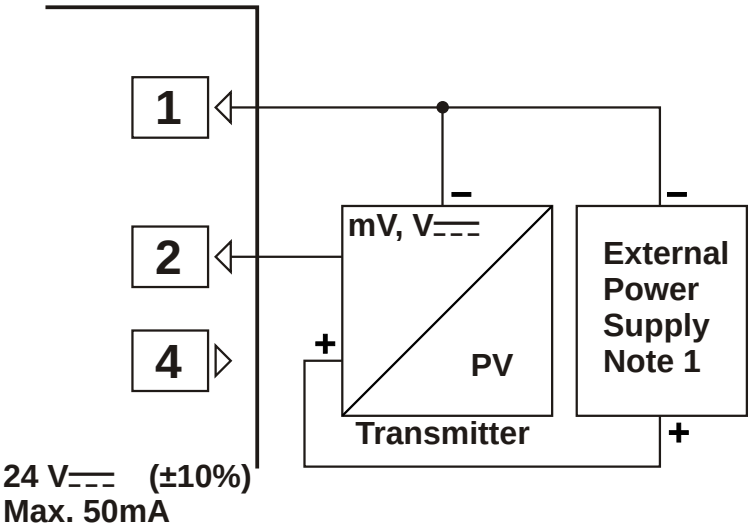

Note 1 : External power supply must be selected according to supply voltage range and required current for transmitter.

Input resistance is greater than 10M for **0...50mV⎓**
Input resistance is 43K **for 0...10V⎓**

3.5 Relay Output Connection

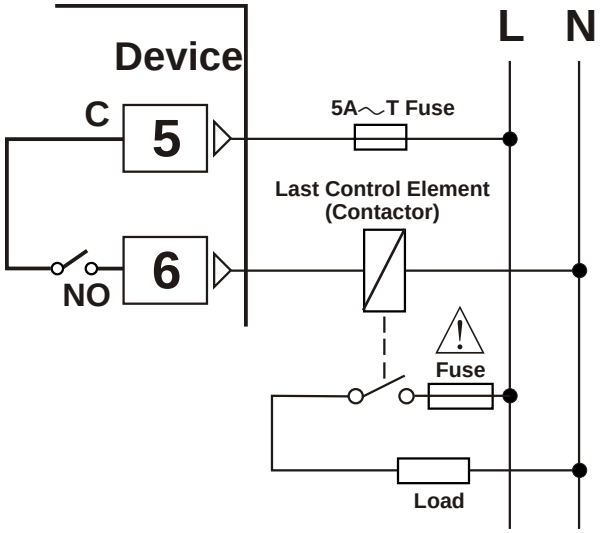

Fuses must be selected according to the application.

3.6 Galvanic Isolation Test Values of ESM-4450 Process Controller and Input/Output Modules

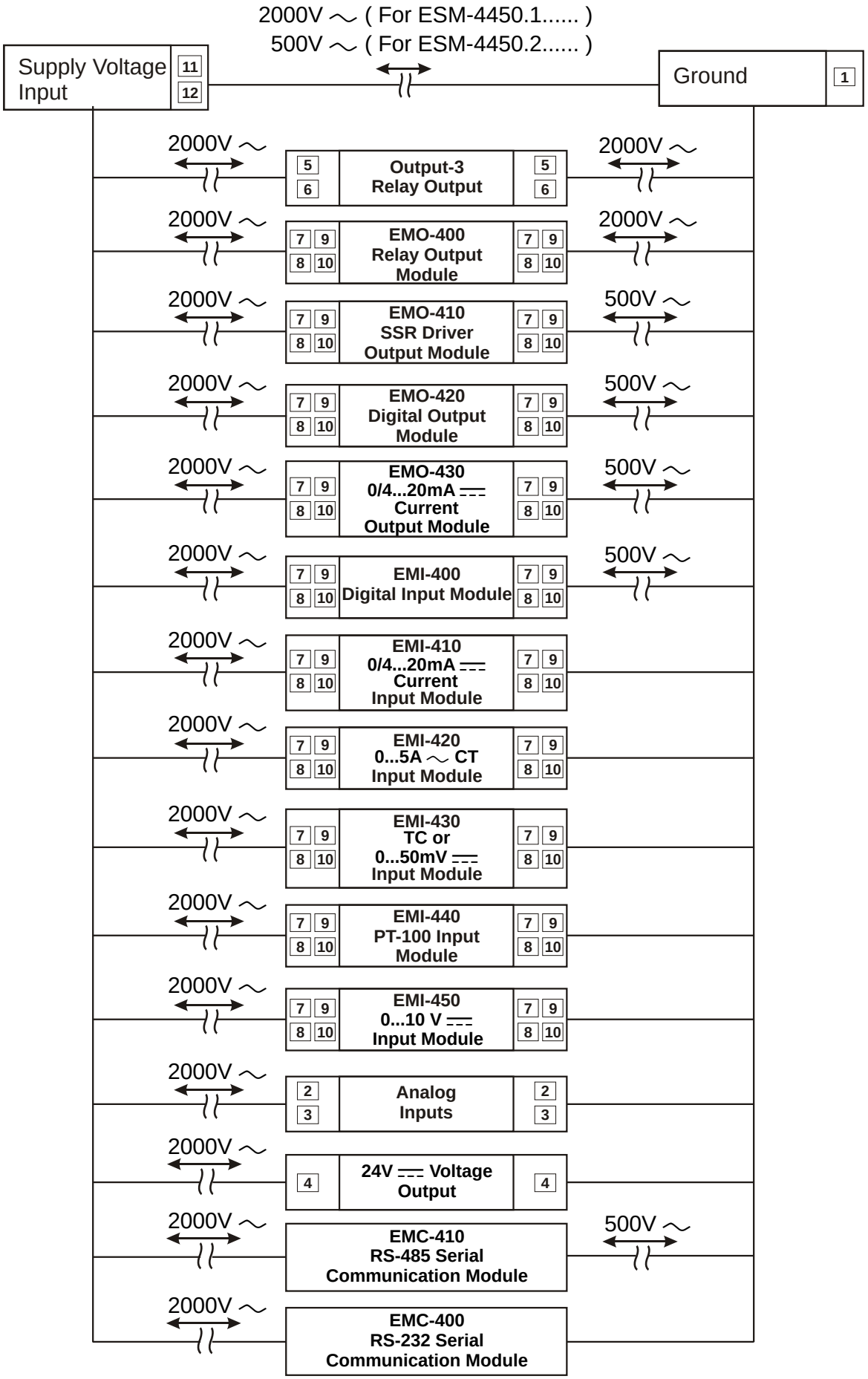

4.Definitions and Specifications of Modules

ESM-4450 process controller is a modular product which is designed to operate with additional analogue and digital input/output units which user may need.

Two input/output modules can be plugged in the device by the user. User may configure the product for different applications according to the system requirements with the input/output modules which are described in this section.

Dimensions of Input/Output Modules

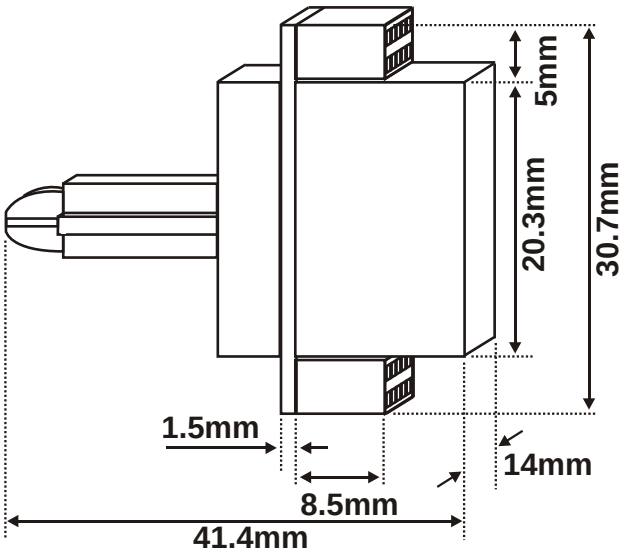

4.1 Input Modules

4.1.1 EMI-400 Digital Input Module

EMI-400 Digital input module can be installed to Module-1 or Module-2 socket for using the digital input functions.

Specifications of EMI-400 Digital Input Module

Input Type :Normally Open Contact, NPN , PNP , Voltage Input (2 Volt and below 2 Volt is Logic “0”, 4 Volt and above 4 Volt is Logic “1”. Maximum 30V can be applied)
Dimensions :14x30.7x41.4mm
Input Resistance : 2K2 .

Applications of EMI-400 Digital Input Module

It is used to run, stop and pause ramp-soak functions in RAMP/SOAK applications.
It can be used to operate the process control output as AUTOMATIC/MANUAL, start the PID tune operation and latch canceling.

Detailed information about functions of Digital Input Module functions are given in parameters section. For using these functions EMI-400 Digital Input Module must be installed to Module-1 or Module-2 socket.

4.1.2 EMI-410 0/4...20mA⎓ Current Input Module

EMI-410 0/4...20mA⎓ current input module can be plugged in Module-1 or Module-2 socket to use as 2nd sensor input, for measuring process value or for using alarm functions which are related to measured value.
Also,"remote set" function can be used by installing the module. Please refer to Section 8.2.3 or 8.2.4 for detailed information (rES1 , rES2 parameters)

EMI-410, EMI-430, EMI-440 or EMI-450 analogue input modules can not be plugged-in Module-1 and Module-2 socket at the same time.

Specifications of EMI-410 0/4...20mA⎓ Current Input Module

Input Type : 0/4...20 mA⎓ Current Input
Accuracy : 0.3%
Dimensions : 14x30.7x41.4mm
Input Resistance : 2R7 .

Applications of EMI-410 0/4...20mA⎓ Current Input Module

It can be used to measure any process value and use it with an alarm function in applications that 2nd sensor input is necessary.
The current value (0/4...20mA⎓) on the module input can be used as process set value when "remote set" function is activated and system can be controlled with analogue signal (0/4...20 mA ⎓) which is applied from remote point.

Detailed information about functions of EMI-410 0/4...20mA⎓ Current Input Module functions are given in parameters section. For using these functions EMI-410 0/4...20mA⎓ Current Input Module must be installed to Module-1 or Module-2 socket.

For using EMI-410 0/4...20mA⎓ current input module as 0...20mA⎓ , uAS1 Or uAS2 must be 0000

4.1.3 EMI-420 0...5A~ CT Input Module

EMI-420 0...5A~ CT Input Module can be plugged in Module-1 or Module-2 socket for detecting heater failures in any applications.

Two EMI-420 ~CT input modules can not be plugged in Module-1 and Module-2 socket at the same time.

Specifications of EMI-420 0...5A~ CT Input Module

Input Type : 0...5A~
Accuracy : 2% FS
Dimensions :14x30.7x41.4mm
Input Resistance :23m .

Applications of EMI-420 0...5A ~CT Input Module

It can be used for observing heater current with current transformer and detecting heating failure.

Detailed information about functions of EMI-420 0...5A~ CT Input Module functions are given in parameters section. For using these functions, EMI-420 0...5A~ CT Input Module must be installed to Module-1 or Module-2 socket.

4.1.4 EMI-430 TC (Thermocouple) or 0...50mV⎓ Input Module

EMI-430 TC or 0...50mV⎓ input module can be plugged in Module-1 or Module-2 socket to use as 2nd sensor input, for measuring process value or for using alarm functions which are related to measured value.
Also “remote set” function can be used by plugging this module. Please refer to Section 8.2.3 or 8.2.4 for detailed information.(rES1 , rES2 parameters)

EMI-410, EMI-430, EMI-440 or EMI-450 analogue input modules can not be plugged-in Module-1 and Module-2 socket at the same time.

Specifications of EMI-430 TC or 0...50mV⎓ Input Module
Please refer to Section 8.2.3 or 8.2.4 for selection of input type and scale of TC input type (L, J, K, R, S, T, B, E, N,C)
Accuracy : 0.3%
Dimensions :14x30.7x41.4mm
Input Resistance :Greater than 10M

Applications of EMI-430 0...50mV⎓ Input Module
It can be used to measure any process value and use it with an alarm function in applications that 2nd sensor input is necessary.
The voltage value (0...50mV⎓) on the module input can be used as process set value when "remote set" function is activated and system can be controlled with analogue signal(0..50mV⎓) which is applied from remote point.

Detailed information about functions of EMI-430 TC or 0...50mV⎓ Input Module are given in parameters section. For using these functions EMI-430 TC or 0...50mV⎓ Input Module must be installed to Module-1 or Module-2 socket.

For using EMI-430 TC or 0...50mV⎓ input module as 0...50mV⎓, uAS1 or uAS2 must be 0000

4.1.5 EMI-440 Pt-100 Input Module

EMI-440 Pt-100 input module can be plugged in Module-1 or Module-2 socket to use as 2nd sensor input, for measuring process value or for using alarm functions which are related to measured value.
Also “remote set” function can be used by plugging this module. Please refer to Section 8.2.3 or 8.2.4 for detailed information.(rES1 , rES2 parameters)

EMI-410, EMI-430, EMI-440 or EMI-450 analogue input modules can not be plugged-in Module-1 and Module-2 socket at the same time.

Specifications of EMI-440 Pt-100 Input Module
Please refer to Section 8.2.3 or 8.2.4 for selection of input type and scale
Accuracy : 0.5%
Dimensions : 14x30.7x41.4mm
Input Resistance : Greater than 10M

Applications of EMI-440 Pt-100 Input Module
It can be used to measure any process value and use it with an alarm function in applications that 2nd sensor input is necessary.
The Pt-100 value on the module input can be used as process set value when “remote set” function is activated and system can be controlled with analogue signal which is applied from remote point.

Detailed information about functions of EMI-440 Pt-100 input module are given in PARAMETERS section. For using these functions EMI-440 Pt-100 input module must be installed to Module-1 or Module-2 socket.

4.1.6 EMI-450 0...10V⎓ Input Module

EMI-450 0...10V⎓ input module can be plugged in Module-1 or Module-2 socket to use as 2nd sensor input, for measuring process value or for using alarm functions which are related to measured value.(In some sections it is defined as analogue input module)
Also “remote set” function can be used by plugging this module. Please refer to Section 8.2.3 or 8.2.4 for detailed information.(rES1 , rES2 parameters)

EMI-410, EMI-430, EMI-440 or EMI-450 analogue input modules can not be plugged-in Module-1 and Module-2 socket at the same time.

Specifications of EMI-450 0...10V⎓ Input Module
Accuracy **:** 0.3%
Dimensions **:** 14x30.7x41.4mm
Input Resistance **:**43K .

Applications of EMI-450 0...10V⎓ Input Module
It can be used to measure any process value and use it with an alarm function in applications that 2nd sensor input is necessary.
(0...10V⎓) value on module input can be used as process set value when “remote set” function is activated and system can be controlled with analogue signal(0...10V⎓) which is applied from remote point.

Detailed information about functions of EMI-450 0...10mV⎓ Input Module are given in parameters section. For using these functions EMI-450 0...10mV⎓ Input Module must be installed to Module-1 or Module-2 socket.

For using EMI-450 0...10V⎓ input module as 0...10V⎓, uAS1 or uAS2 Must be 0000

4.2 Output Modules

4.2.1 EMO-400 Relay Output Module

EMO-400 Relay output module can be plugged in Module-1 or Module-2 socket to use functions which are defined for relay output.

Specifications of EMO-400 Relay Output Module

Output : 3A@250V~ at resistive load, Single Open(or Close) Contact
Dimensions : 14x30.7x41.4mm
Electrical Life : 100.000 Operation (Full Load)

Applications of EMO-400 Relay Output Module

It can be used with heating or cooling functions as process control output, as alarm output by programmable different alarm functions, as logic output to transfer some datas on the device to the system. These alternatives are explained in parameters section as logic output function.

Detailed information about functions of EMO-400 Relay Output Module are given in parameters section. For using these functions EMO-400 Relay Output Module must be installed to Module-1 or Module-2 socket.

4.2.2 EMO-410 SSR Driver Output Module

EMO-410 SSR Driver Output Module can be plugged in Module-1 or Module-2 socket to use functions which are defined for SSR driver output.

Specifications of EMO-410 SSR Driver Module

Output : Maximum 26 mA, 22V⎓ ±10%, isolated
Dimensions : 14x30.7x41.4mm

Applications of EMO-410 SSR Driver Output Module

It can be used with heating or cooling functions as process control output, as alarm output by programmable different alarm functions, as logic output to transfer some datas on the device to the system.

Note 1 : If short output period is needed in a system, using SSR Driver output module is recommended. (Relay must not be used for short output periods because of limited life of their relay contact (open/close events))

Detailed information about functions of EMO-410 SSR Driver Output Module are given in parameters section. For using these functions EMO-410 SSR Driver Output Module must be installed to Module-1 or Module-2 socket.

4.2.3 EMO-420 Digital (Transistor) Output Module

EMO-420 Digital (Transistor) Output Module can be plugged in Module-1 or Module-2 socket to use functions which are defined for digital output.

Specifications of EMO-420 Digital (Transistor) Output Module

Output **:** Maximum 40 mA, 15-18V⎓ ±10%, isolated
Dimensions : 14x30.7x41.4mm

Applications of EMO-420 Digital (Transistor) Output Module
It can be used with heating or cooling functions as process control output, as alarm output by programmable different alarm functions, as logic output to transfer some datas on the device to the system. These alternatives are explained in parameters section as logic output function.

Detailed information about functions of EMO-420 Digital (Transistor) Output Module are given in parameters section. For using these functions EMO-420 Digital (Transistor) Output Module must be installed to Module-1 or Module-2 socket.

4.2.4 EMO-430 0 / 4 ...20mA⎓ Current Output Module

EMO-430 0/4...20mA⎓ Current Output Module can be plugged in Module-1 or Module-2 socket to use functions which are defined for current output.

Specifications of EMO-430 0/4...20mA⎓ Current Output Module

Output **:** 0/4...20mA⎓ current output
Accuracy **:** 1%
Note : To get 0...10V⎓ **,** 500 resistor with 0.05% tolerance must be connected in parallel as a shunt resistor to module output (Please refer to Section 5.2.5 for detailed information)
Maximum load impedance **:** 600
Dimensions **:** 14x30.7x41.4mm

Applications of EMO-430 0/4...20mA⎓ Current Output Module

It can be used in heating or cooling functions as process control output.
Process value, difference between process and set value or set value can be retransmitted to the system as 0...20mA⎓ or 4...20mA⎓ output. Retransmission is explained in parameters section.

Detailed information about functions of EMO-430 Current Output Module are given in parameters section. For using these functions EMO-430 0/4...20mA⎓ current Output Module must be installed to Module-1 or Module-2 socket.

4.3 Installing and Pulling Out Input/Output Modules

First, detach all cable connections from the device and uninstall it from the panel.

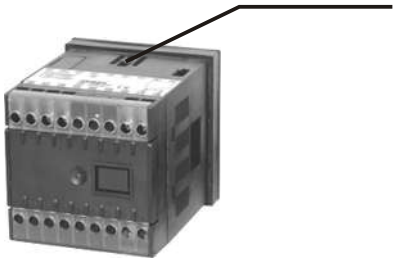

Push to the lock pins where top and bottom of the device

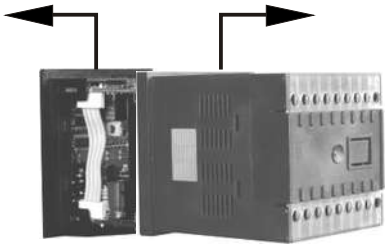

Pull the cover case with your other hand from front panel to rear side.

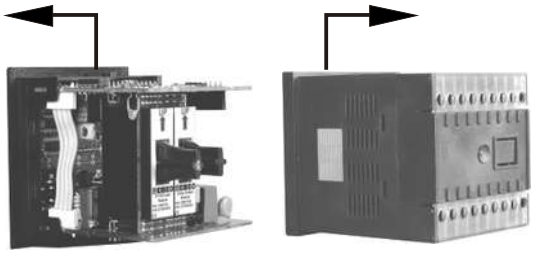

Pull out the cover case from the device

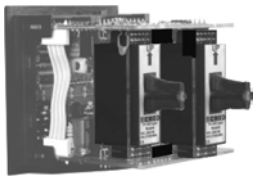

Slide input/output modules into socket.
Pull out the module from it's socket, instead of this module install the new one or other module user wants to use.

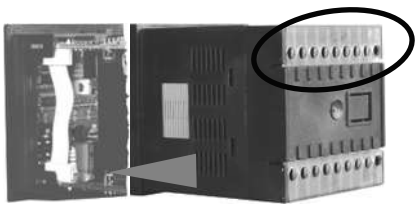

Replace the cover case by taking care of the terminal numbers should be at right position.

After adding or changing modules to the unit, these changes must be taken into consideration while mounting of the unit to the system. If mounting is incorrect, it can cause accidents to harm system, operator or person who does the mounting. Responsibility of these kind of harmful events belongs to the user.

4.4 To Stick Input/Output Modules' Labels to the Device

Every module which is plugged in Module-1 or Module-2 socket has labels for showing the relation between connection terminal and the device. These labels are attached to empty boxes which are separated for Module-1 and Module-2 on the device. Labels for all modules and attachment places are shown below.

Label which describes terminal connection of module that is plugged in Module-2 socket is attached to this area.

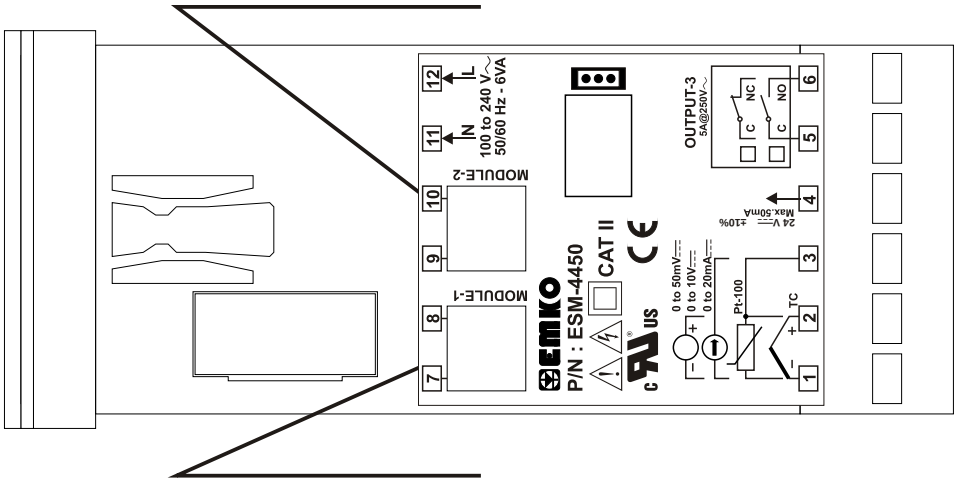

Label which describes terminal connection of module that is plugged in Module-1 socket is attached to this area.

LABELS FOR INPUT MODULES

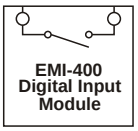

Label for EMI-400 Digital Input Module

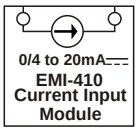

Label for EMI-410 0/4...20mA ⎓ Current Input Module

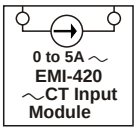

Label for EMI-420 0...5A ~ CT Input Module

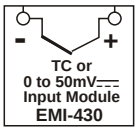

Label for EMI-430 TC or 0...50mV ⎓ Input Module

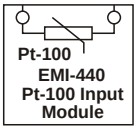

Label for EMI-440 Pt-100 Input Module

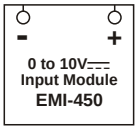

Label for EMI-450 0...10V ⎓ Input Module

LABELS FOR OUTPUT MODULES

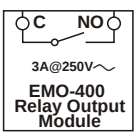

Label for EMO-400 Relay Output Module

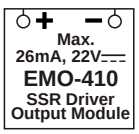

Label for EMO-410 SSR Driver Module

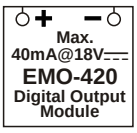

Label for EMO-420 Digital Output Module

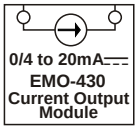

Label for EMO-430 0/4...20mA⎓ Current Output Module

Example : If user installs EMO-400 Relay Output Module to Module-1 socket, EMO-430 0/4...20mA⎓ Current Output Module to Module-2 socket and attach the appropriate labels on the device view will be like below :

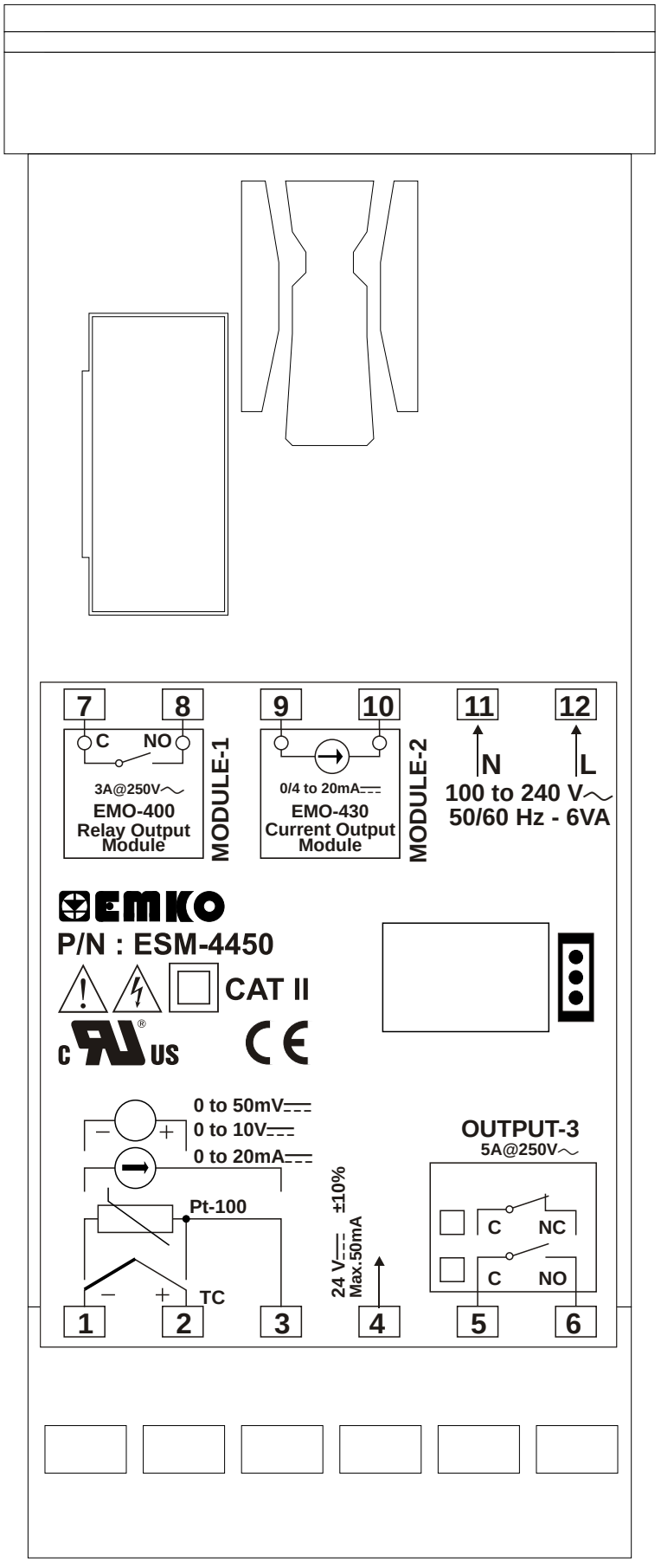

5. Connection Terminals of Input/Output Modules and Connection Wirings

Module-1 / Module-2 Optional Input Modules

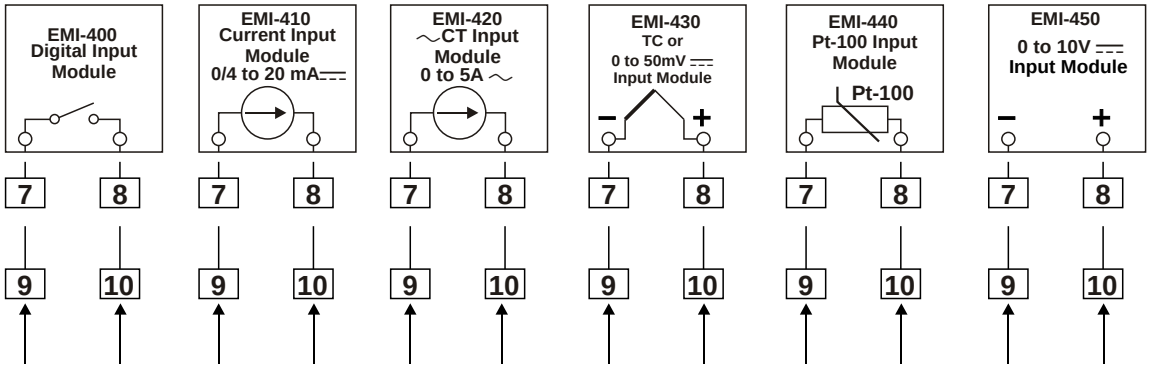

Module-1 / Module-2 Optional Output Modules

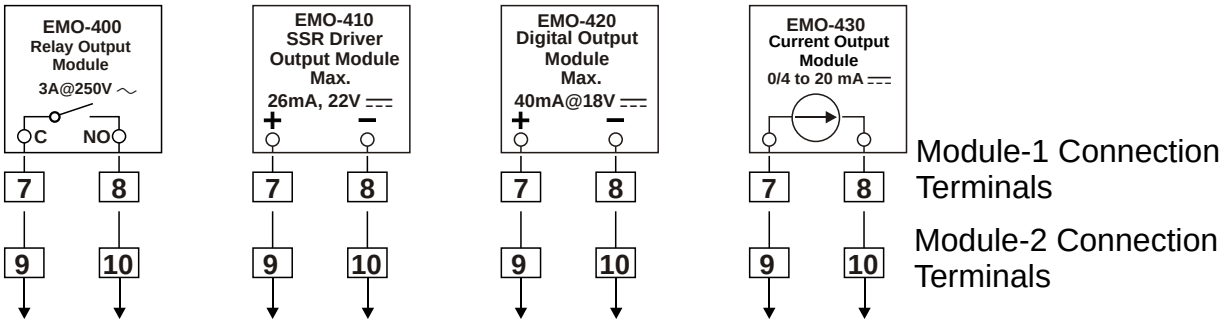

5.1 Connection Wirings for Input Modules

5.1.1 Connection of EMI-400 Digital Input Module

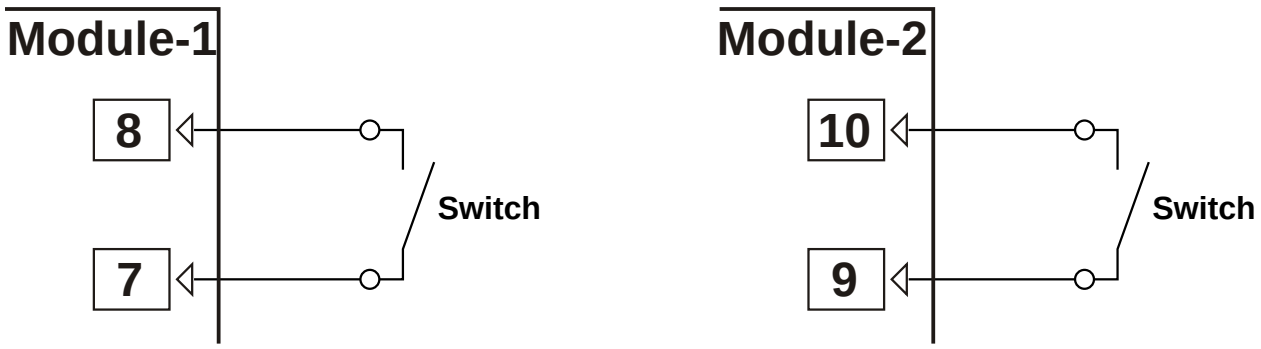

5.1.2 Connection of 3-Wire Transmitter to EMI-410 0/4...20 mA⎓ Current Input Module

Transmitter connection by using supply voltage on the device

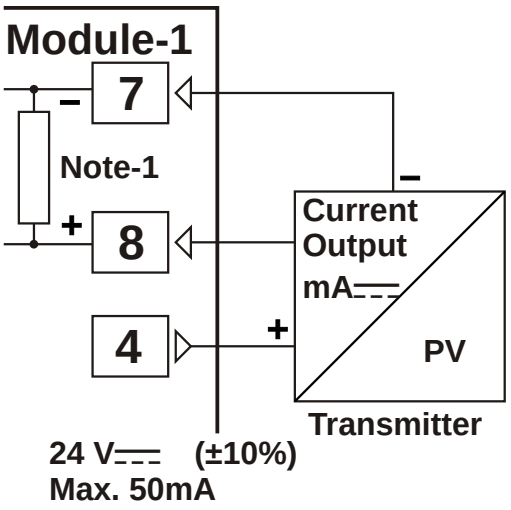

Transmitter connection by using external supply voltage source.

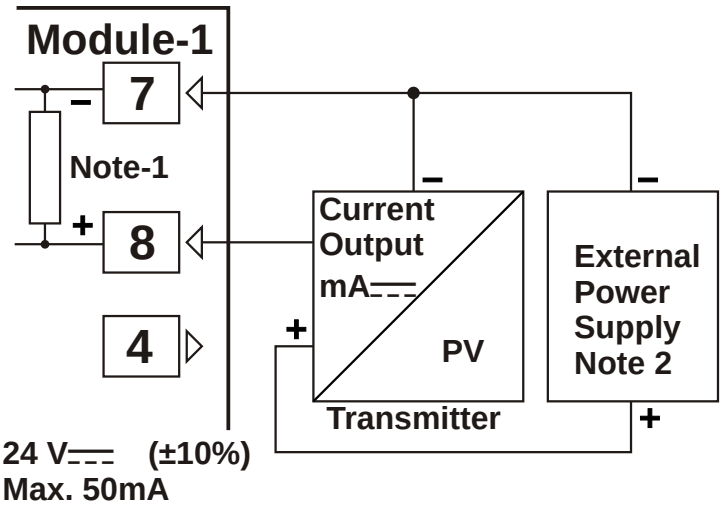

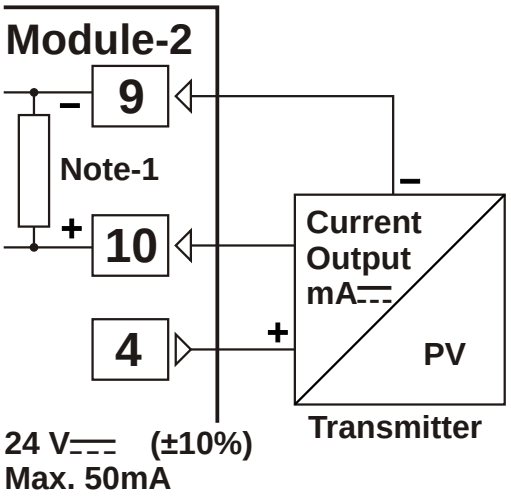

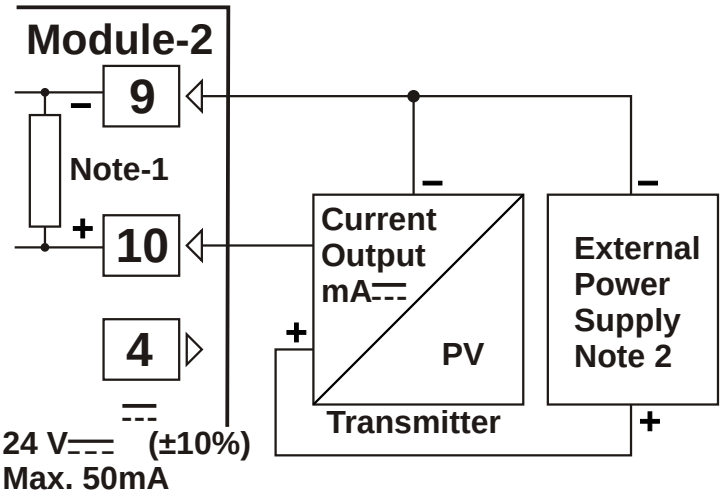

Note-1 : There is internal 2R7 shunt

Note 2 : External power supply must be selected according to power supply voltage range and required current for transmitter.

EMI-410, EMI-430, EMI-440 or EMI-450 analogue input modules can not be plugged-in Module-1 and Module-2 socket at the same time.

5.1.3 Connection of Serial Transmitter(Loop Powered) to EMI-410 0/4...20 mA⎓ Current Input Module

Transmitter connection by using supply voltage on the device

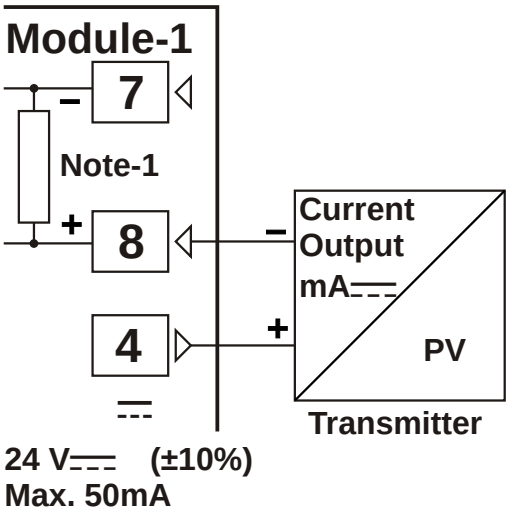

Transmitter connection by using external supply voltage source.

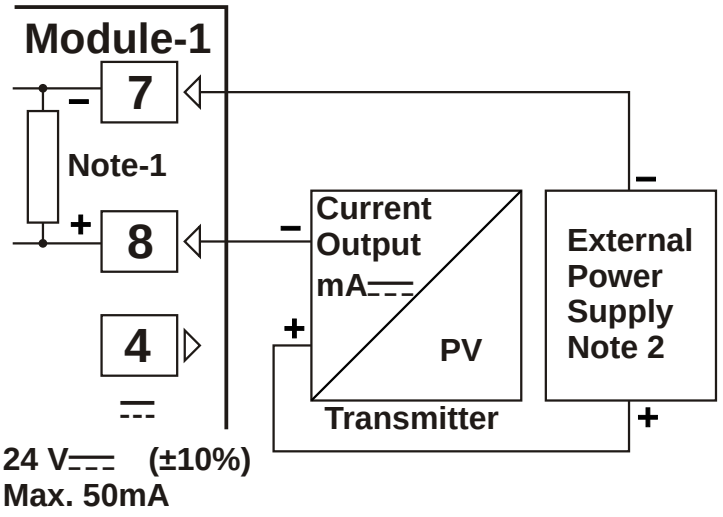

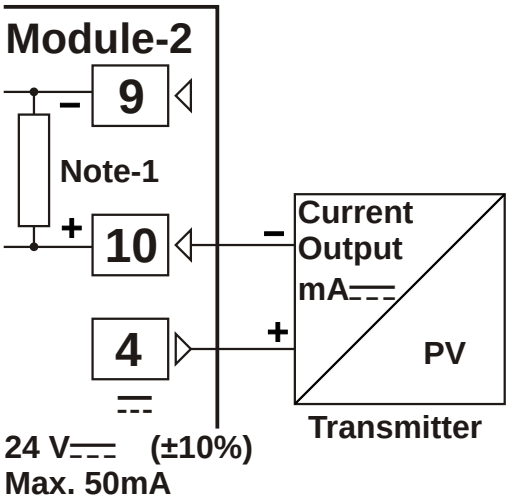

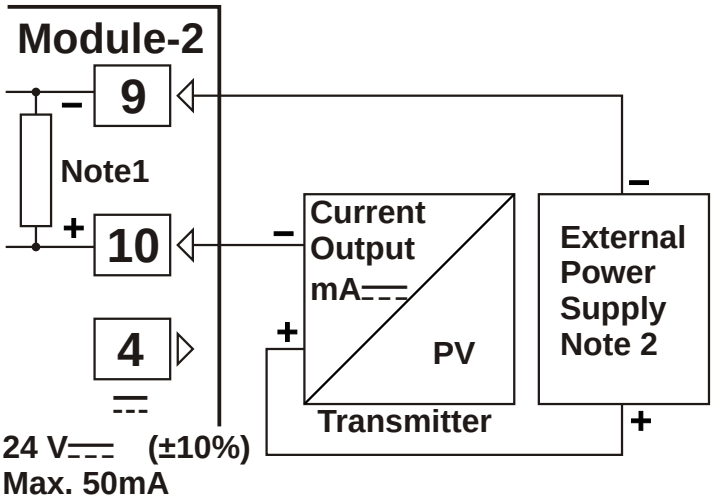

Note-1 : There is internal 2R7 shunt

Note 2 : External power supply must be selected according to power supply voltage range and required current for transmitter.

EMI-410, EMI-430, EMI-440 or EMI-450 analogue input modules can not be plugged-in Module-1 and Module-2 socket at the same time.

5.1.4 Current Transformer Connection to EMI-420 0...5 A ~CT Input Module

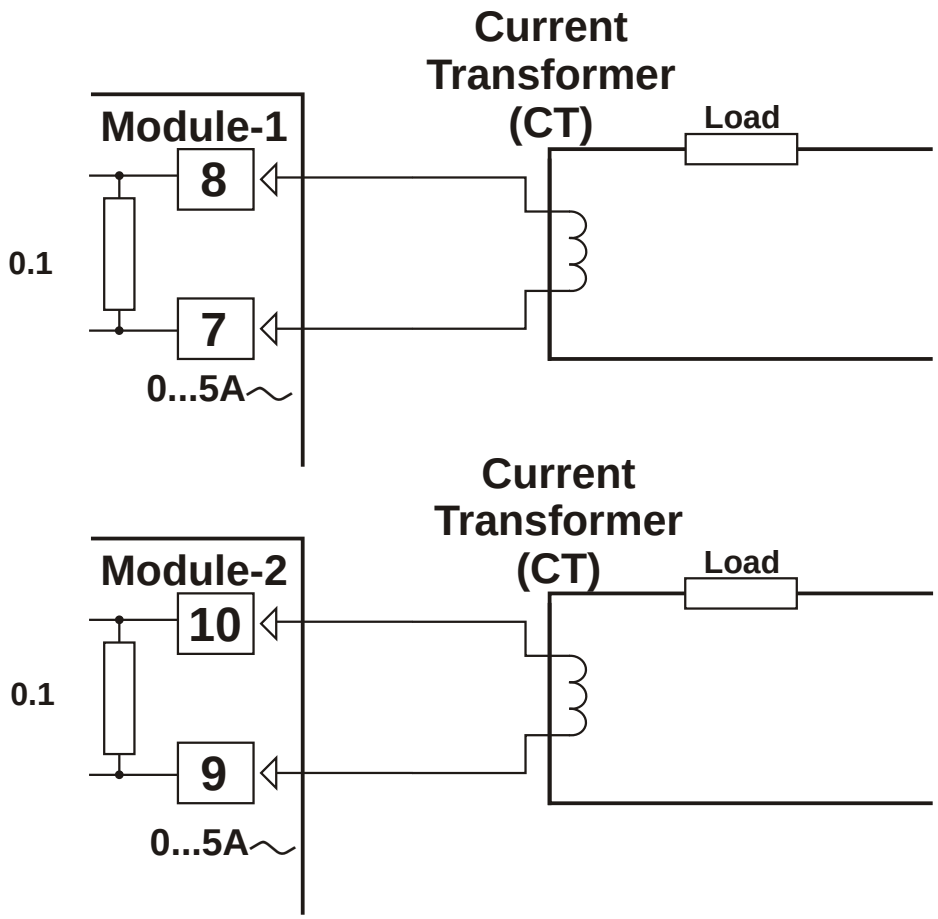

Two EMI-420 ~ CT input modules can not be plugged in Module-1 and Module-2 socket at the same time.

5.1.5 Connection of EMI-430 TC (Thermocouple) or 0...50mV⎓ Input Module

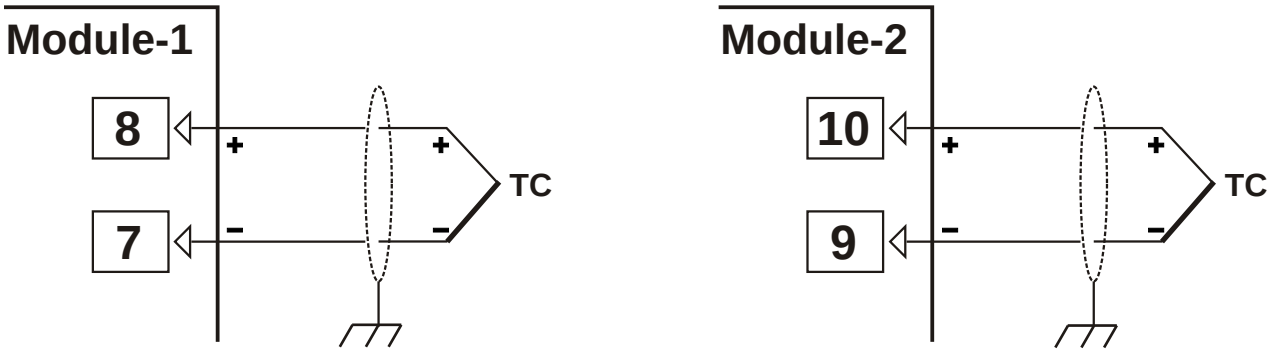

Connect the wires with the polarity as shown above. Always use compensation wire corresponding to the thermocouple used. If present, the shield must be connected to a proper ground.

EMI-410, EMI-430, EMI-440 or EMI-450 analogue input modules can not be plugged-in Module-1 and Module-2 socket at the same time.

5.1.6 Using EMI-430 TC or 0...50mV⎓ Input Module as 0...50mV⎓ Input

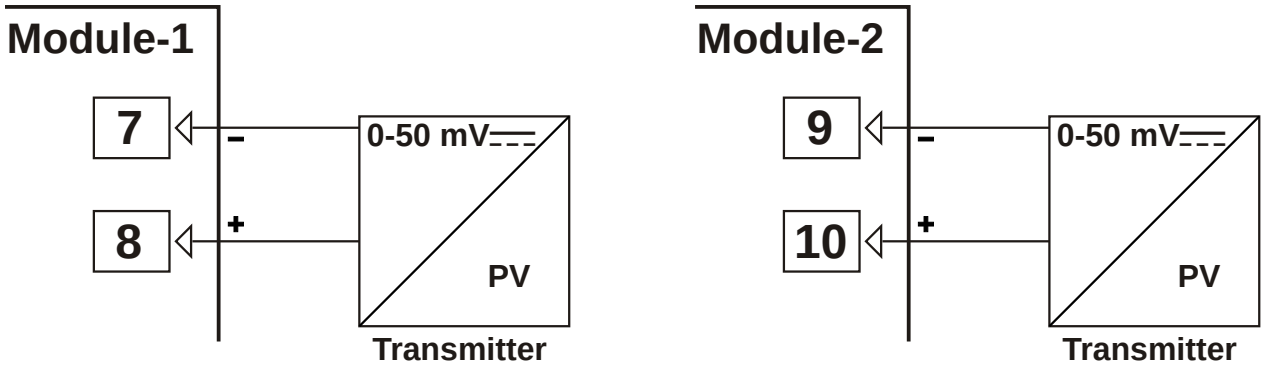

By selecting Module-1 or Module-2 analogue input configuration parameter ISL 1 or ISL2 0002 and defining calibration points with dual point calibration property, EMI-430 TC or 0...50mV⎓ module can be used as 0...50mV⎓ input.

EMI-410, EMI-430, EMI-440 or EMI-450 analogue input modules can not be plugged-in Module-1 and Module-2 socket at the same time.

5.1.7 Connection of EMI-440 PT-100 Input Module

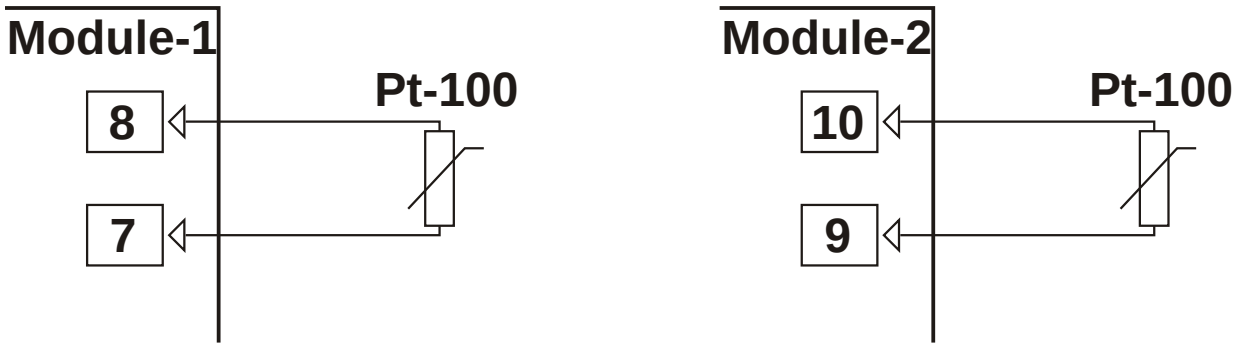

There is no line compensation in PT-100 Input Module
EMI-410, EMI-430, EMI-440 or EMI-450 analogue input modules can not be plugged-in Module-1 and Module-2 socket at the same time.

5.1.8 Connection of EMI-450 0...10V⎓ Input Module

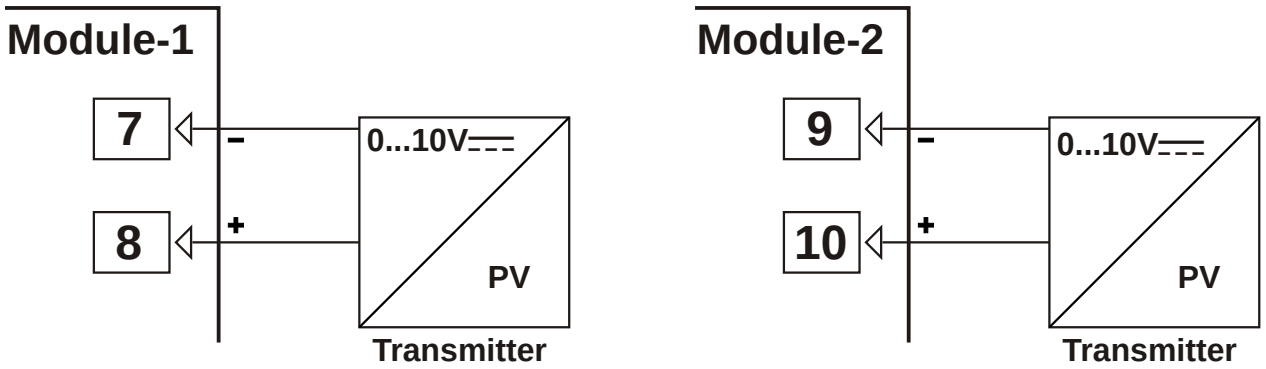

EMI-410, EMI-430, EMI-440 or EMI-450 analogue input modules can not be plugged-in Module-1 and Module-2 socket at the same time.

5.2 Connection Wirings for Output Modules

5.2.1 EMO-400 Relay Output Module Connection

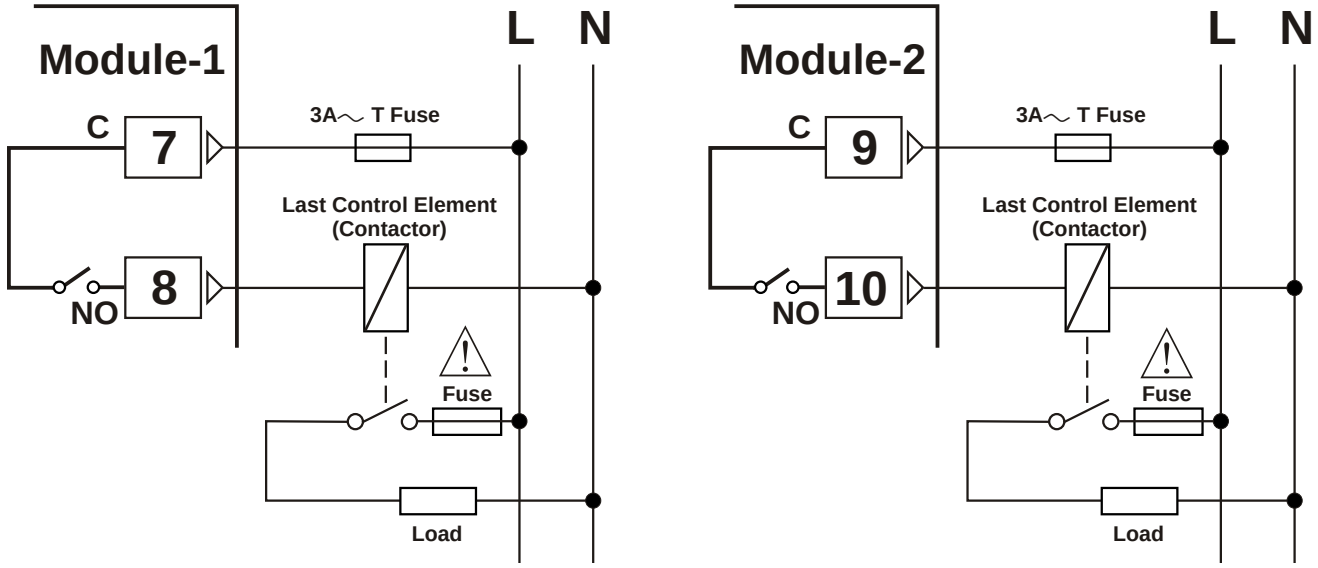

Fuses must be selected according to the applications.

5.2.2 EMO-410 SSR Driver Module Connection

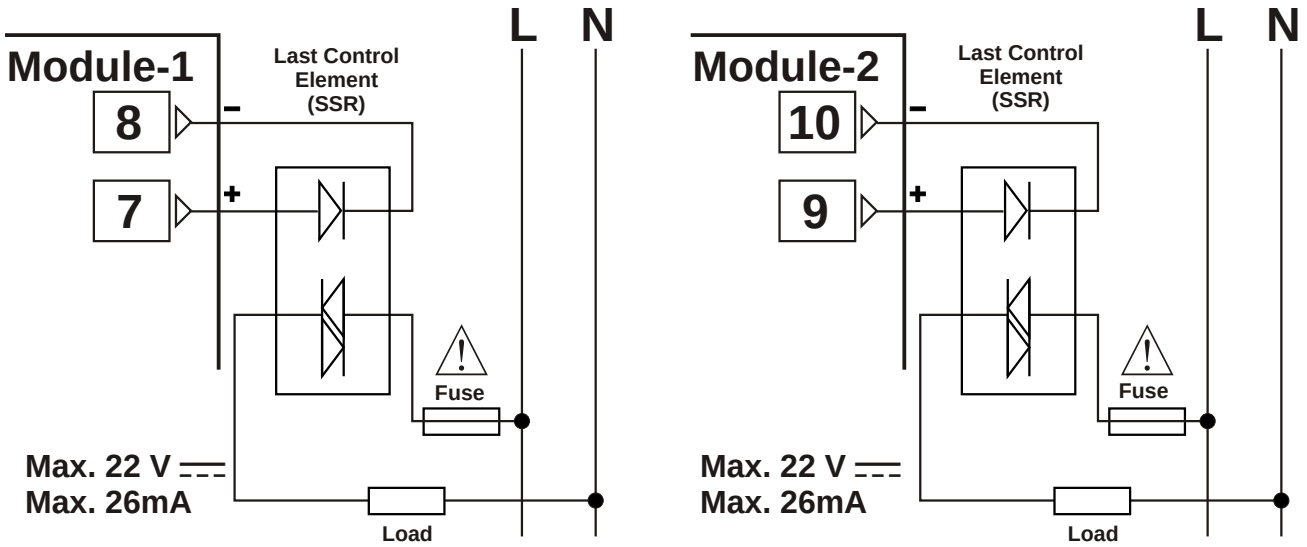

Fuses must be selected according to the applications.

5.2.3 EMO-420 Digital (Transistor) Output Module Connection

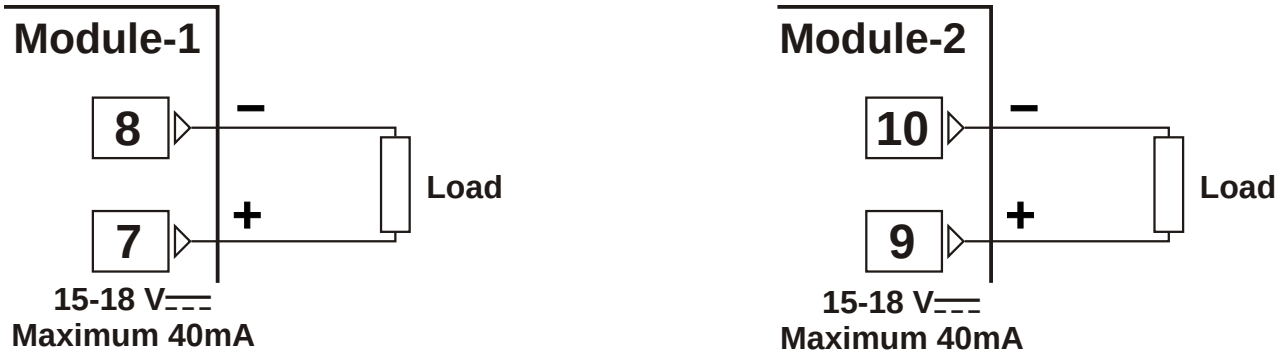

5.2.4 EMO-430 0/4... 20 mA⎓ Current Output Module Connection

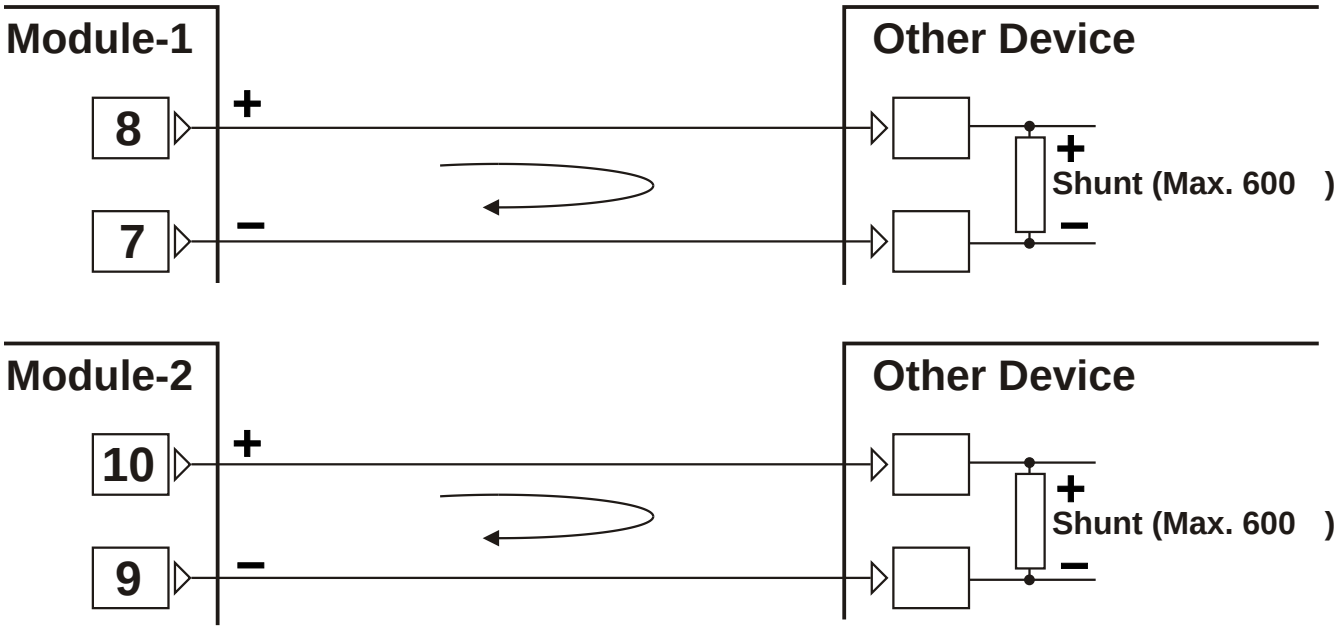

5.2.5 To Get 0...10V⎓ with EMO-430 0/4...20 mA⎓ Current Output Module

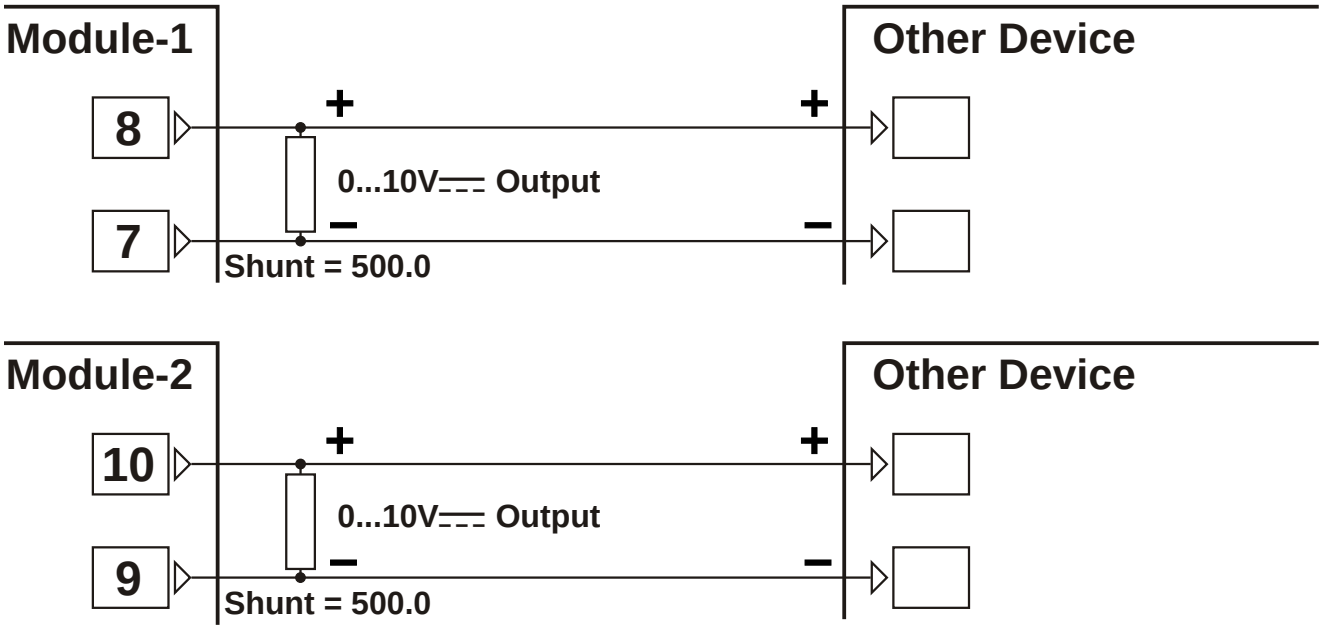

RS-232 Terminal Definitions

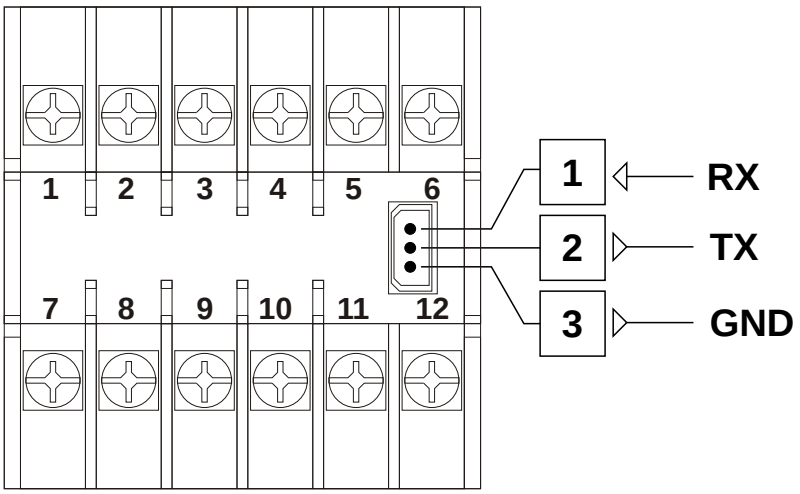

RS-485 Terminal Definitions

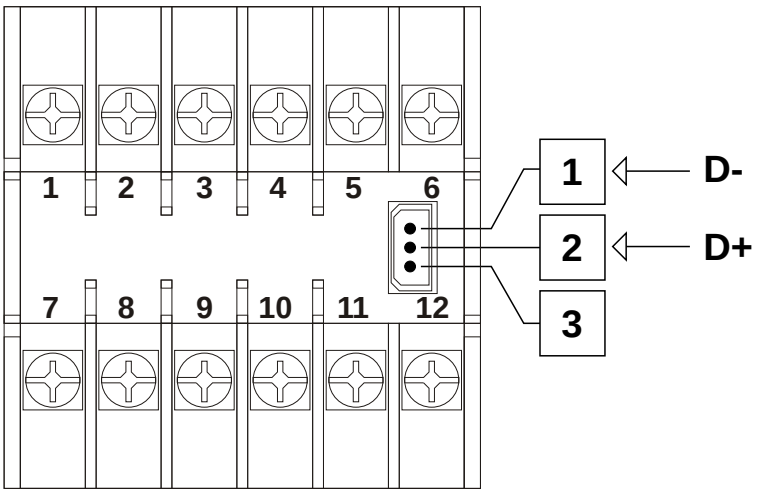

6.1 Cable Connection Between RS-232 Terminal of the Device and PC

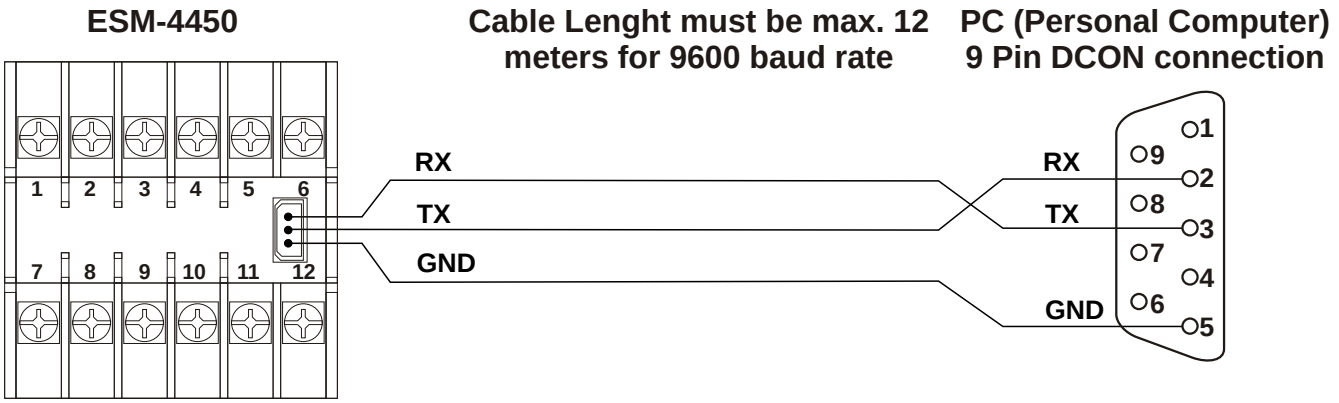

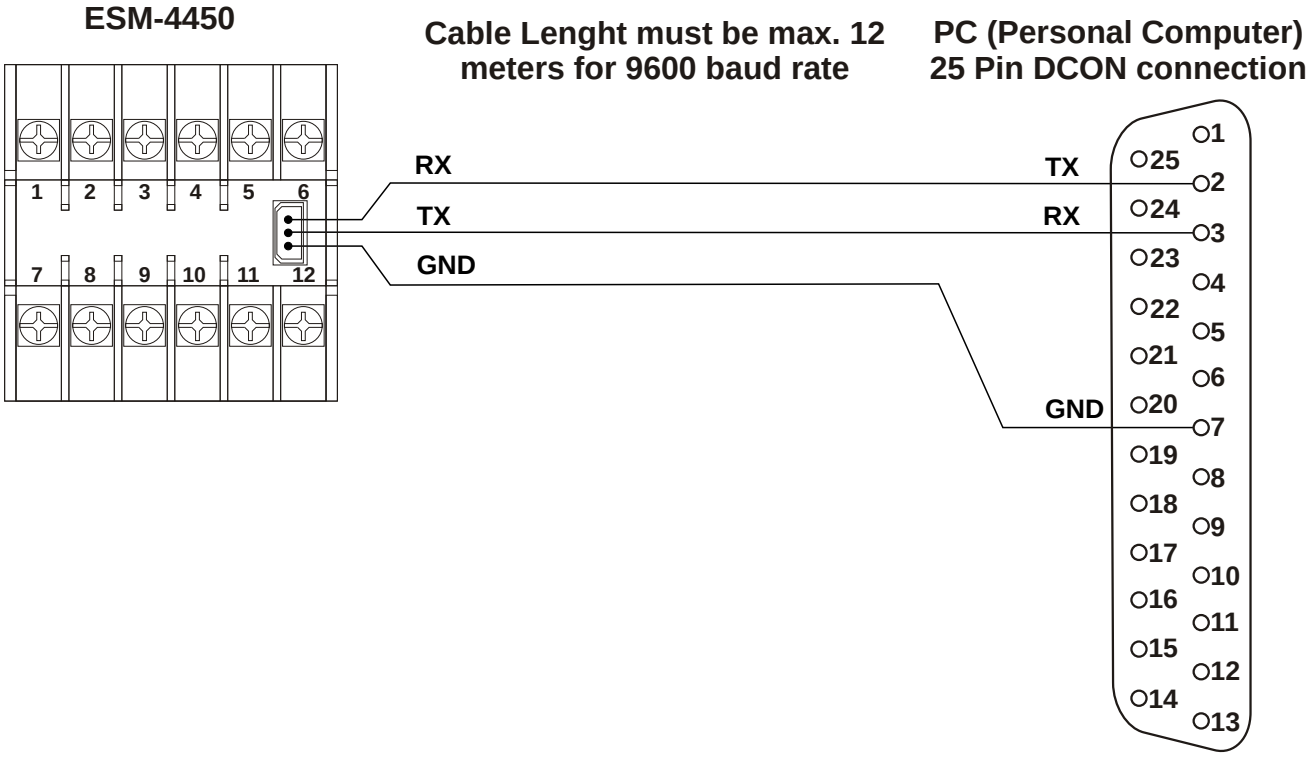

6.2 Connection for RS-485 Serial Communication

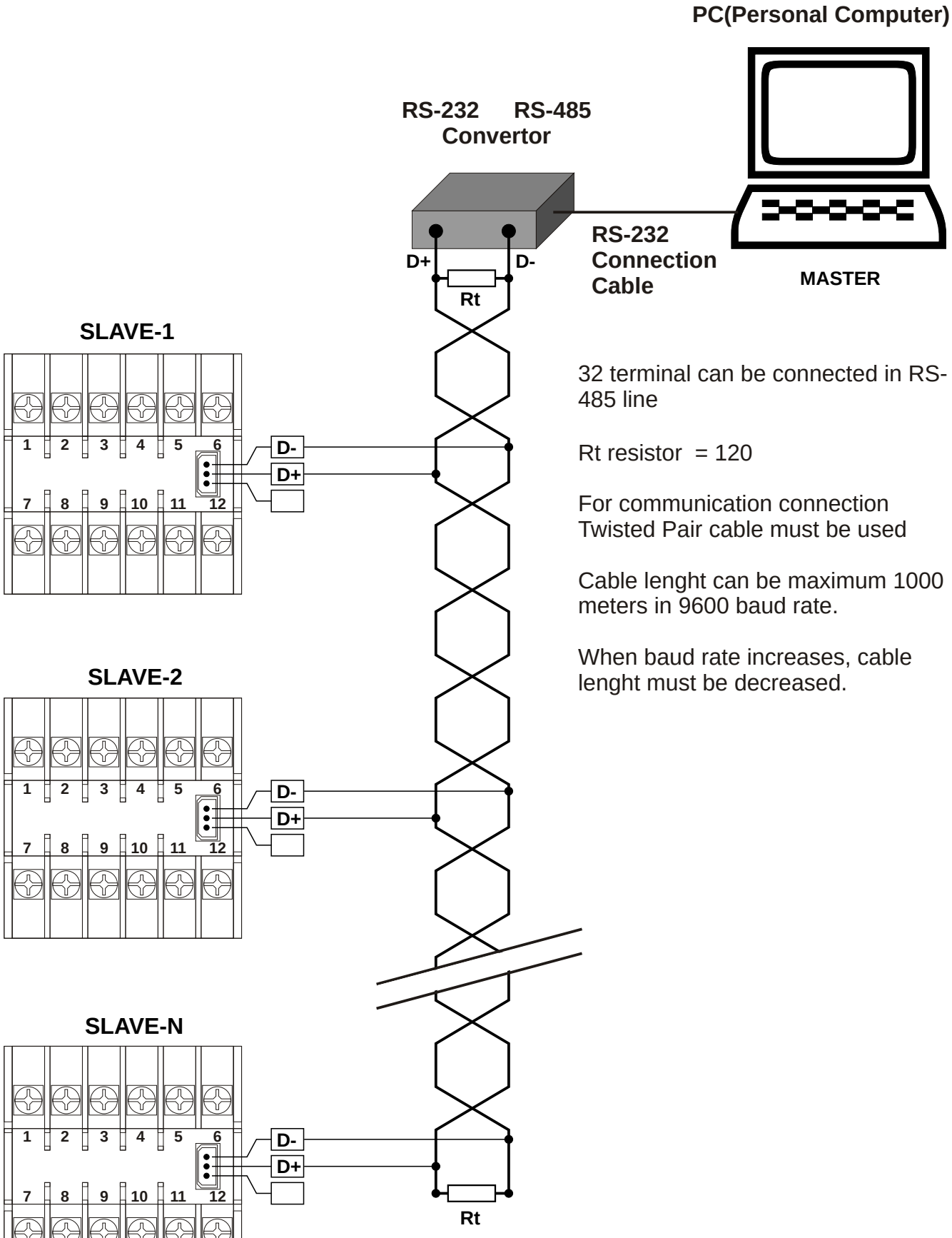

32 terminal can be connected in RS-485 line

Rt resistor = 120

For communication connection Twisted Pair cable must be used

Cable lenght can be maximum 1000 meters in 9600 baud rate.

When baud rate increases, cable lenght must be decreased.

6.3 Installing RS-232 / RS-485 Serial Communication Modules to the Device

Pull the cover case with your hand through rear side as explained in “Installing and Pulling Out Input/Output Modules” section. Pull the modules in Module-1 and Module-2 socket through rear side. Separate supply card which is at the bottom of the equipment by lifting the locking tabs located on front panel. Pay attention to cable connection between top and bottom cards. Damages in this cable makes the equipment not to work.

RS-232 or RS-485 module is plugged into socket signed as A and B. Hold the equipment to be it’s front panel is on your right, communication socket is on your left and module connection socket with 5 terminals on above. Plug in module connection socket with 5 terminals to the socket on Top Card. Do the same things for terminal socket in bottom card and connection socket with 3 terminals. Plug in bottom card to the place in front panel. Install the modules which are pulled out to Module-1 and Module-2 socket. Replace the cover case by taking care of the terminal numbers should be at right position.

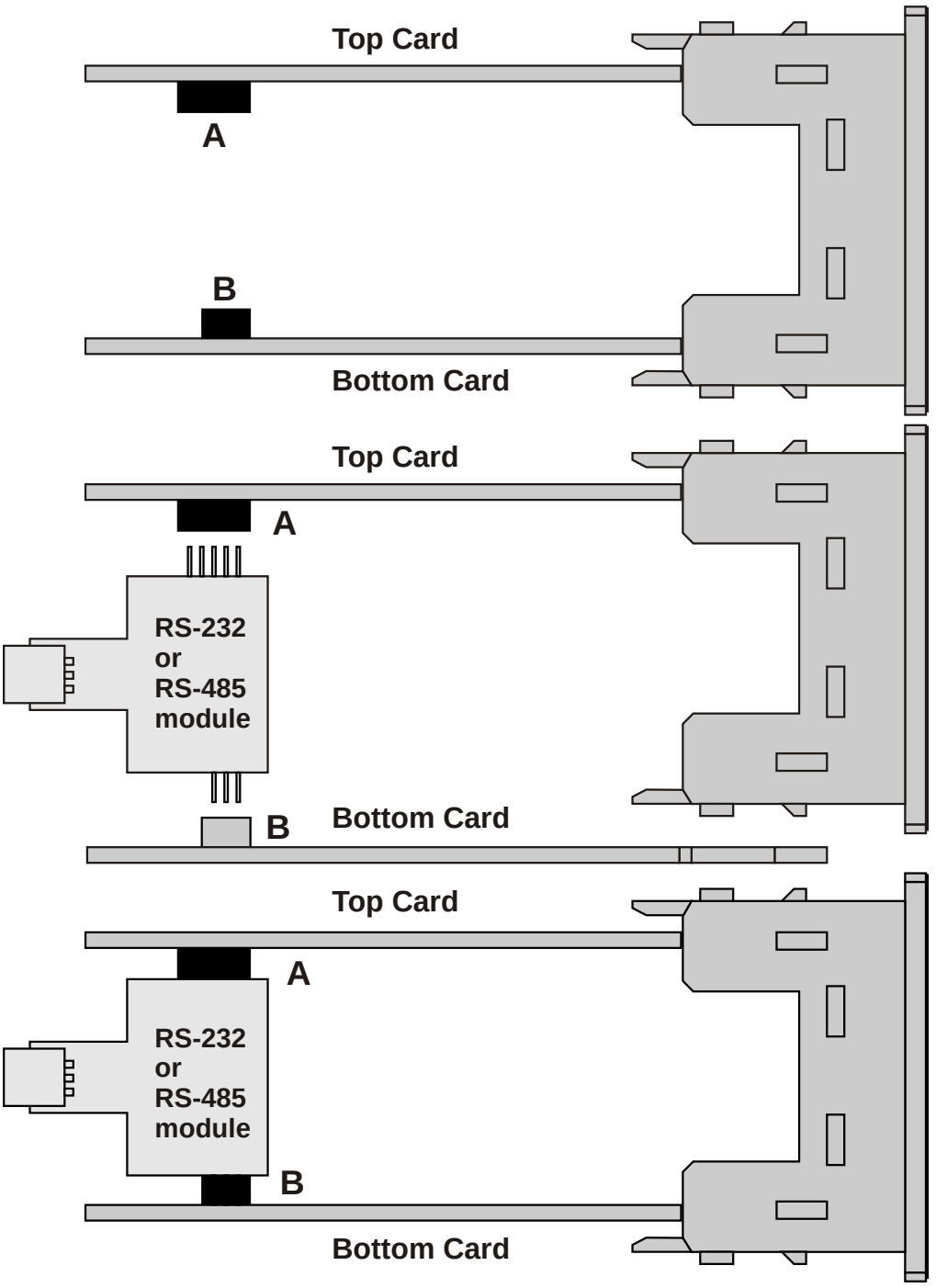

7.Definition of Front Panel and Accessing to the Parameters

7.1 Definition of Front Panel

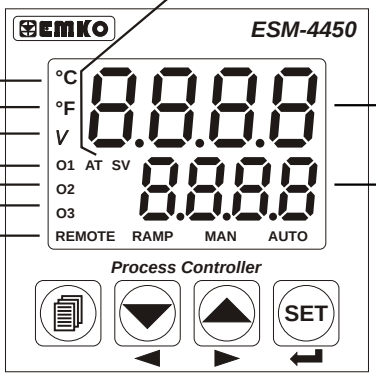

LED indication of °C:Centigrade Unit

LED indication of °F Fahrenheit Unit

LED indication of units other than °C and °F

LED indication of Output-1 Status

LED indication of Output-2 Status

LED indication of Output-3 Status

LED indication of Operation with Remote set value

LED indication of Ramp& Soak operation is active

LED indication of Manual operation (For process output)

LED indication of Automatic operation (For process output)

LED indication of SV, Process set value

LED indication of AT, Autotune is active

Displays Process Value (PV) and Parameter

Displays Proses Set Value (SV) and Parameter

For detailed information; Please refer to Section 8.1.1 (Process and Alarm Set Parameters) and 8.1.3 (Function selection for Top and Bottom Display)

Menu button
This button is used to access to the all menus and to move up to another menu in the menu list

Note-1

This button is used to decrase the values and access to the menu pages

Note-1

This button is used to increase the value and access to the menu pages

This button is used to access to the process set value and use as OK button in program parameters.

Note-1: If increment or decrement button is pressed for 5 seconds continuously, increment and decrement number become 10, if increment or decrement button is pressed for 10 seconds continuously, increment and decrement number become 100.

7.2 Observation of Optional Modules and Software Revision on the Displays

There are two sockets for plugging optional modules to the device. These modules are recognized by the device automatically. When the power is applied to the device all led indicators and display segments are momentarily illuminated for testing. Software revision number of the controller on the bottom display and module definition codes on the top display are momentarily illuminated. Module definiton codes and how to observe these codes of optional modules in Module-1 and Module-2 socket are explained below :

Optional Input/Output module code for Module-1

Optional Input/Output module code for Module-2

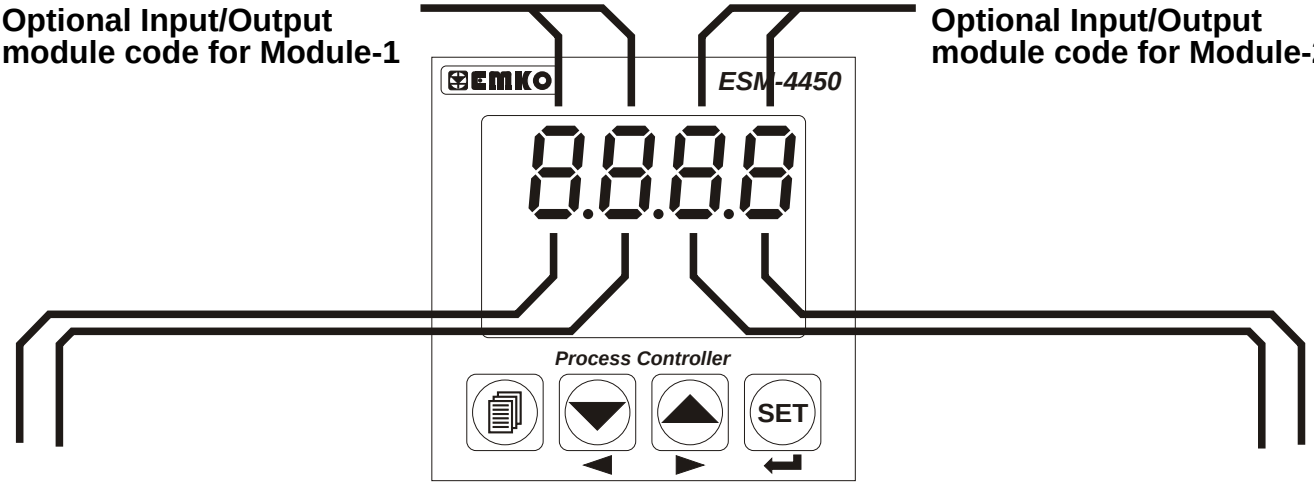

or	**Relay Output Module (EMO-400)**	**Relay Output Module (EMO-400)**	or
oS	**SSR Driver and Digital Output Module (EMO-410 ,EMO-420)**	**SSR Driver and Digital Output Module (EMO-410,EMO-420)**	oS
oA	**0/4...20mA⎓Current Output Module (EMO-430)**	**0/4...20mA⎓Current Output Module (EMO-430)**	oA
id	**Digital Input Module (EMI-400)**	**Digital Input Module (EMI-400)**	id
iA	**Analog Input Module (EMI-410,EMI-430,EMI-440 or EMI-450)**	**Analog Input Module (EMI-410,EMI-430,EMI-440 or EMI-450)**	iA
iC	**0...5 A ∼CT Input Module (EMI-420)**	**0...5 A ∼CT Input Module (EMI-420)**	iC
E	**There is no module in Module-1 socket**	**There is no module in Module-2 socket**	E

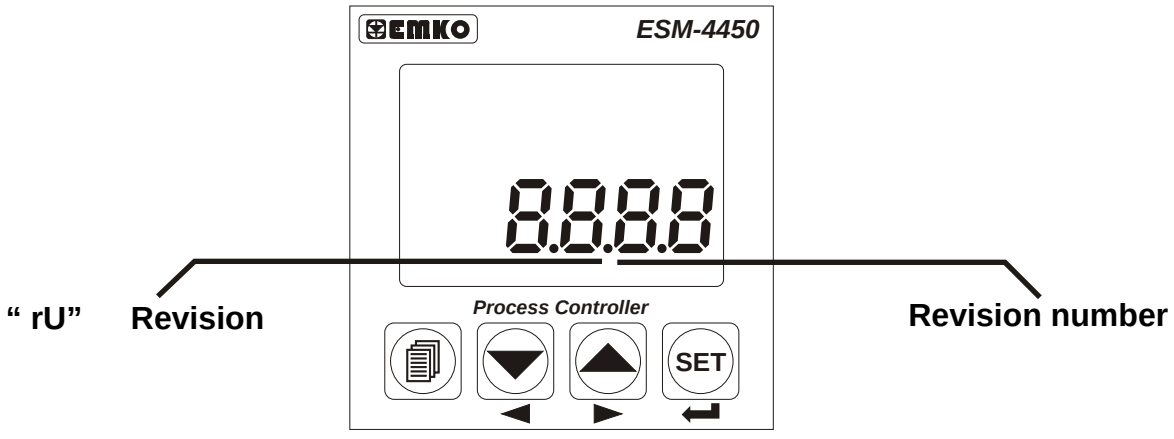

When power on, display of the device is like below:

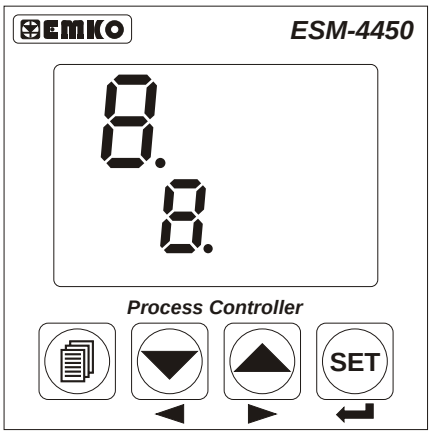

First segments of top and bottom displays are tested



Second segments of top and bottom displays are tested.



Third segments of top and bottom displays are tested.



Fourth segments of top and bottom displays are tested.

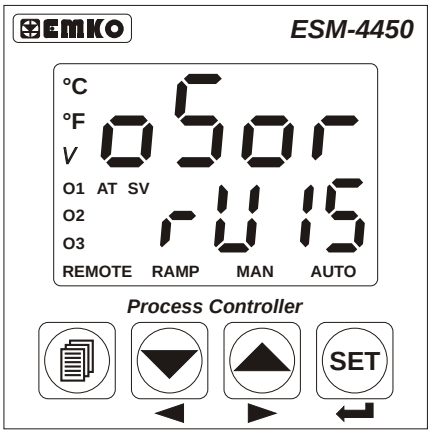

On top display which modules are plugged in Module-1 and Module-2 socket and on bottom display revision number are shown. All leds are energised. Above, there is EMO-410 SSR Driver Output module in Module-1 socket and EMO-400 Relay Output Module in Module-2 socket. Revision number is “15”.



Main operation screen is shown



If there is an unexpected situation while opening the device, power off the device and inform a qualified personnel.

7.3 Adjustment of Process Set Value

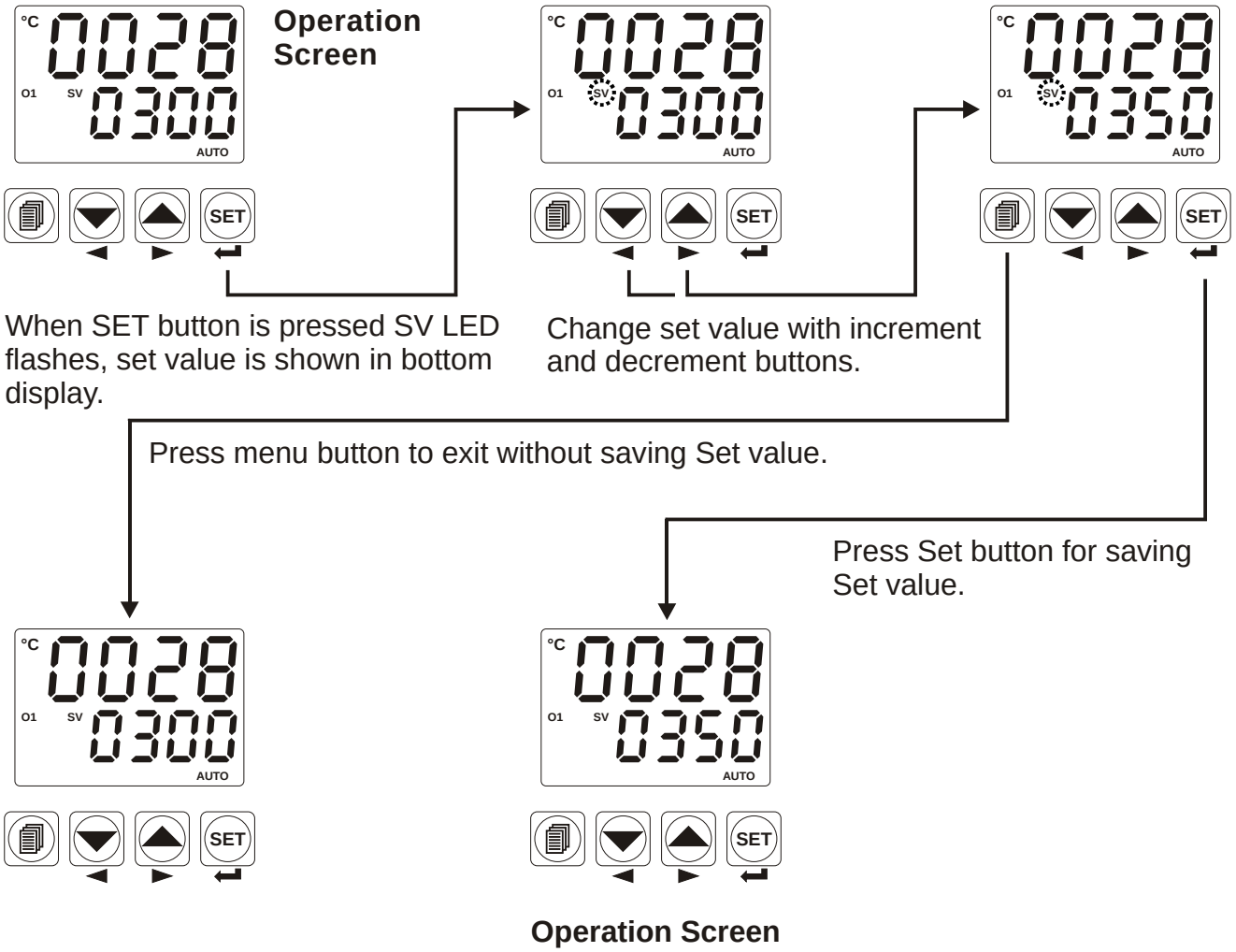

7.4 Easy Access Diagram for Operator Parameters

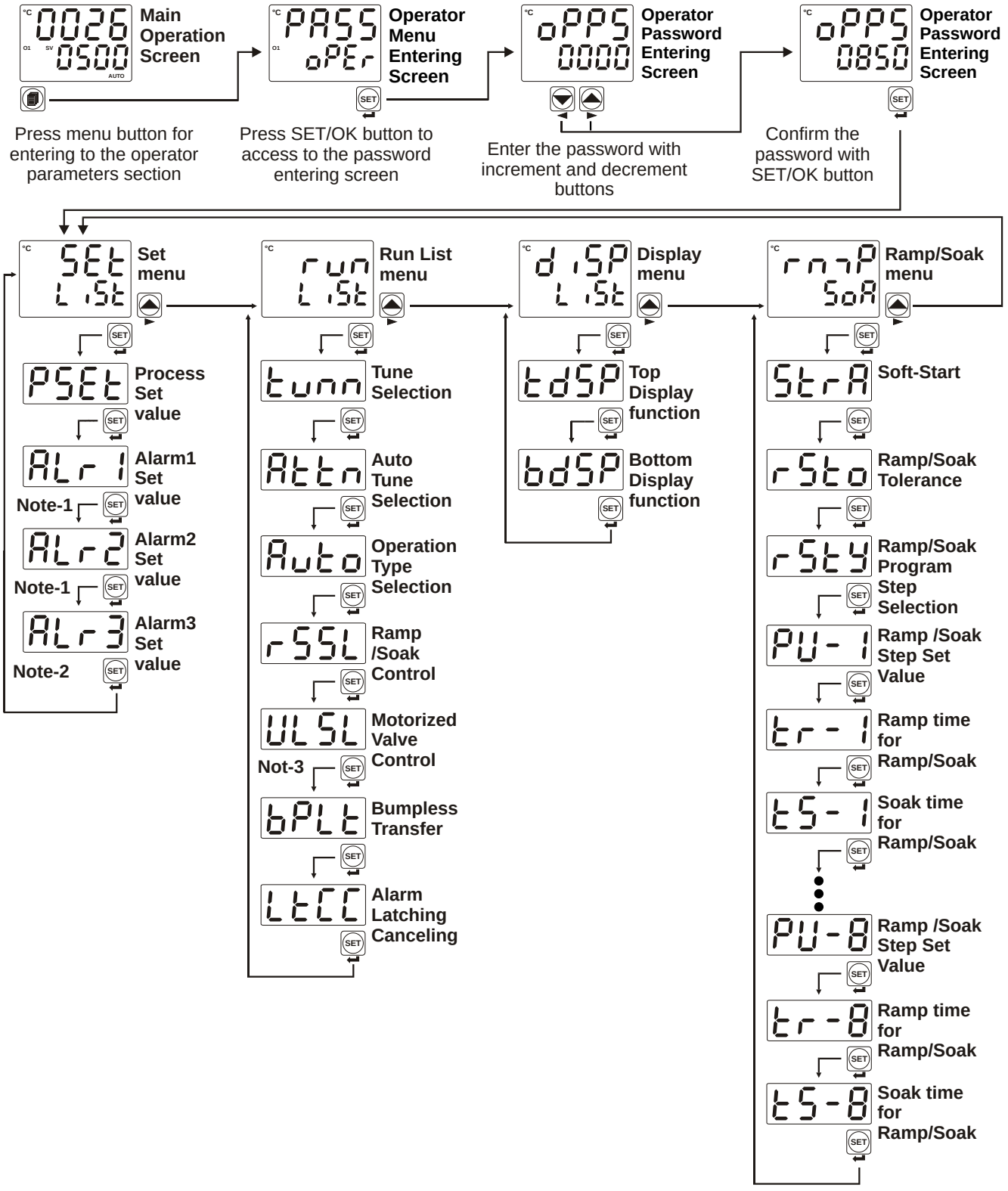

Note-1: It is observed when EMO-400, EMO-410 or EMO-420 module is plugged in Module-1 or Module-2 socket if out1 parameter is Lout in io P1 ConF menu and Lou1 parameter is 0000 or if out2 parameter is Lout in io P2 ConF menu and Lou2 parameter is 0000 .

Note-2: It is observed if out3 parameter is Lout in out3 ConF menu and Lou3 parameter is 0000 .

Note-3: It is observed if EMO-400 Relay Module is plugged in Module-1 socket.

7.5 Easy Access Diagram for Technician Parameters

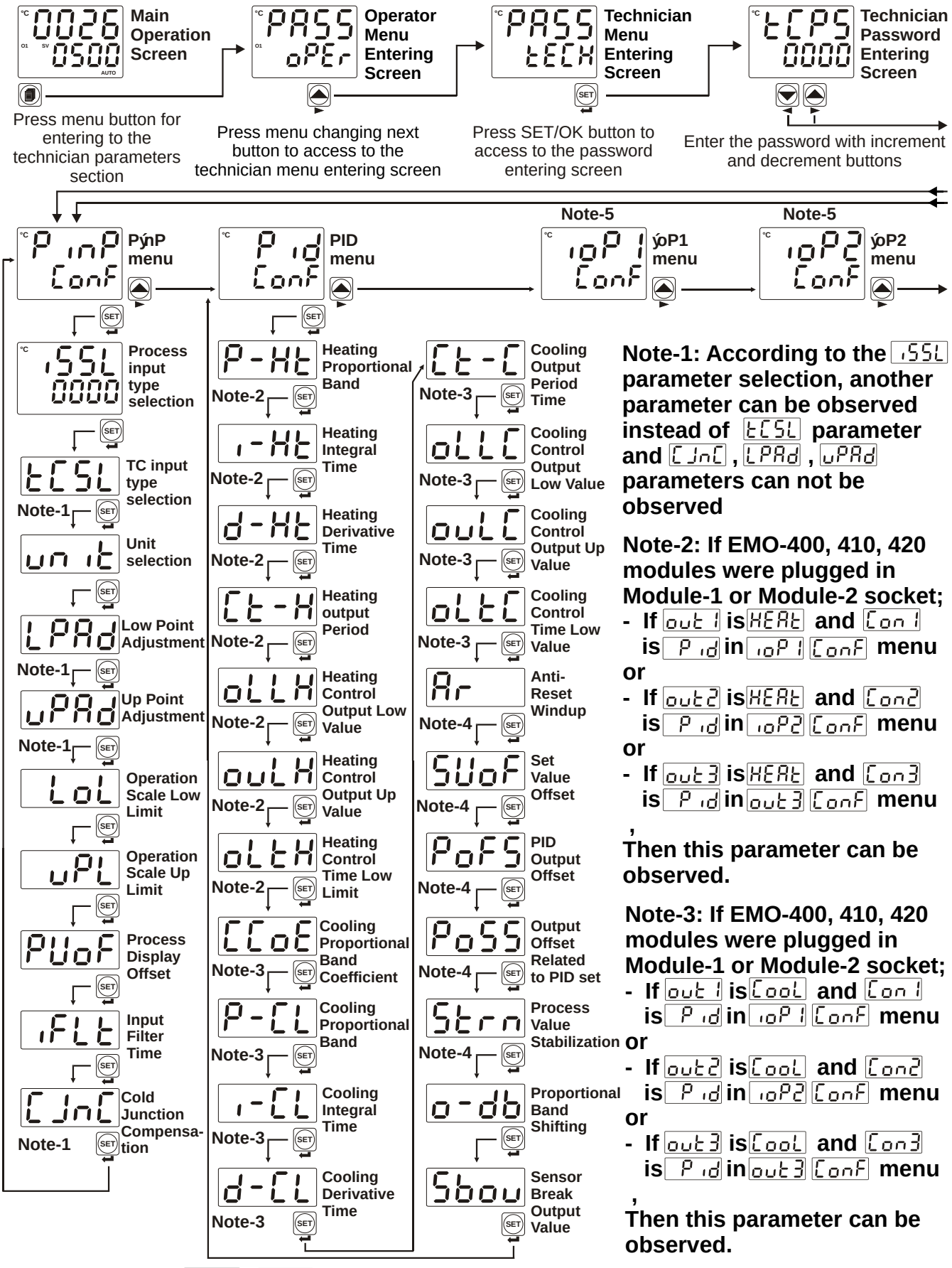

Note-1: According to the [iSSL] parameter selection, another parameter can be observed instead of [tCSL] parameter and [CJnC], [LPAd], [uPAd] parameters can not be observed

Note-2: If EMO-400, 410, 420 modules were plugged in Module-1 or Module-2 socket;
- **If [out1] is [HEAt] and [Con1] is [PId] in [ioP1] [ConF] menu**

or
- **If [out2] is [HEAt] and [Con2] is [PId] in [ioP2] [ConF] menu**

or
- **If [out3] is [HEAt] and [Con3] is [PId] in [out3] [ConF] menu**

, Then this parameter can be observed.

Note-3: If EMO-400, 410, 420 modules were plugged in Module-1 or Module-2 socket;
- **If [out1] is [CooL] and [Con1] is [PId] in [ioP1] [ConF] menu**

or
- **If [out2] is [CooL] and [Con2] is [PId] in [ioP2] [ConF] menu**

or
- **If [out3] is [CooL] and [Con3] is [PId] in [out3] [ConF] menu**

, Then this parameter can be observed.

Note-4: If one of [Con1], [Con2], [Con3] parameters are chosen as [PId], then these parameters can be observed.

Note-5: Parameters in [ioP1] or [ioP2] [ConF] menus are changed according to the module types, so please refer to the Section 7.6 [ioP1] [ConF] and [ioP2] [ConF] easy access diagram

7.5 Easy Access Diagram for Technician Parameters

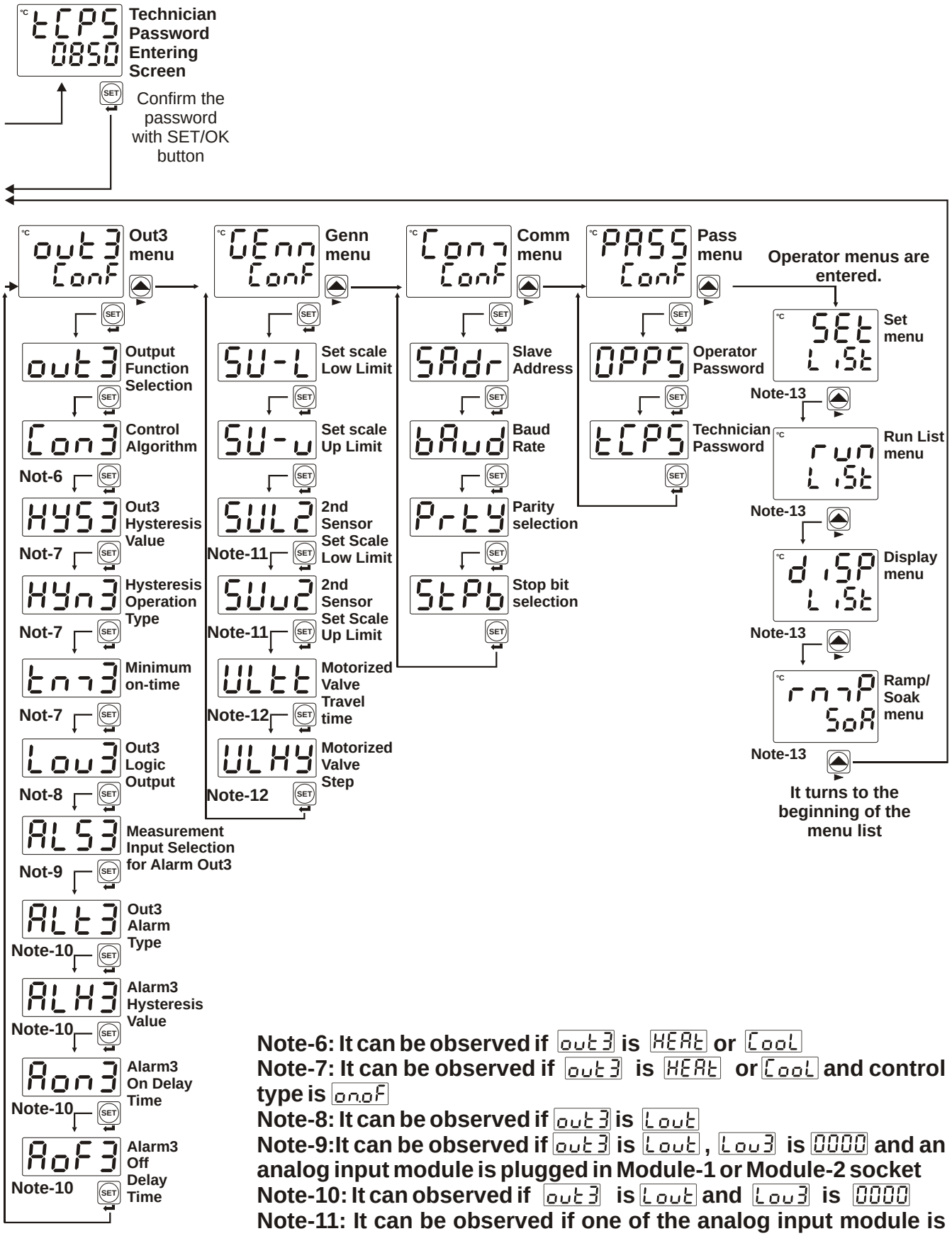

Note-6: It can be observed if out3 is HEAt or CooL
Note-7: It can be observed if out3 is HEAt or CooL and control type is on.oF
Note-8: It can be observed if out3 is Lout
Note-9:It can be observed if out3 is Lout , Lou3 is 0000 and an analog input module is plugged in Module-1 or Module-2 socket
Note-10: It can observed if out3 is Lout and Lou3 is 0000
Note-11: It can be observed if one of the analog input module is plugged in Module-1 or Module-2 socket.
Note-12: If ULSL parameter is HEAt or CooL , then these parameters can be observed.
Note-13: Please refer to the Section 7.4 Operator Parameters easy access diagram

7.6 Easy Access Diagram for io P1 Conf and io P2 Conf Parameters

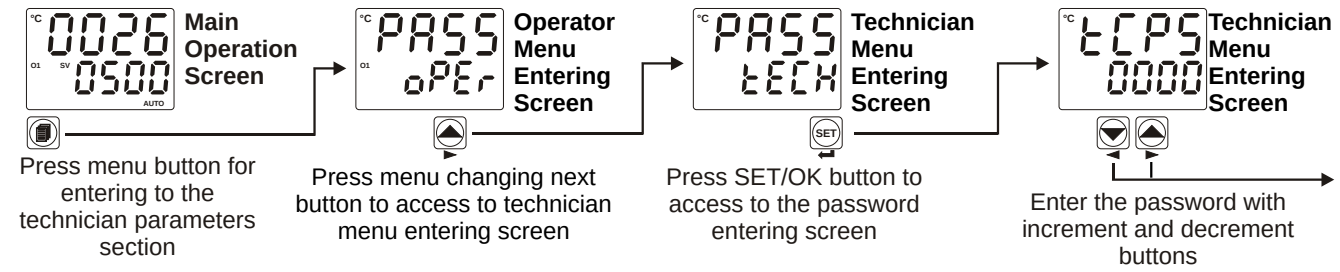

If EMO-400,410 or 420 module is plugged in Module-1 socket

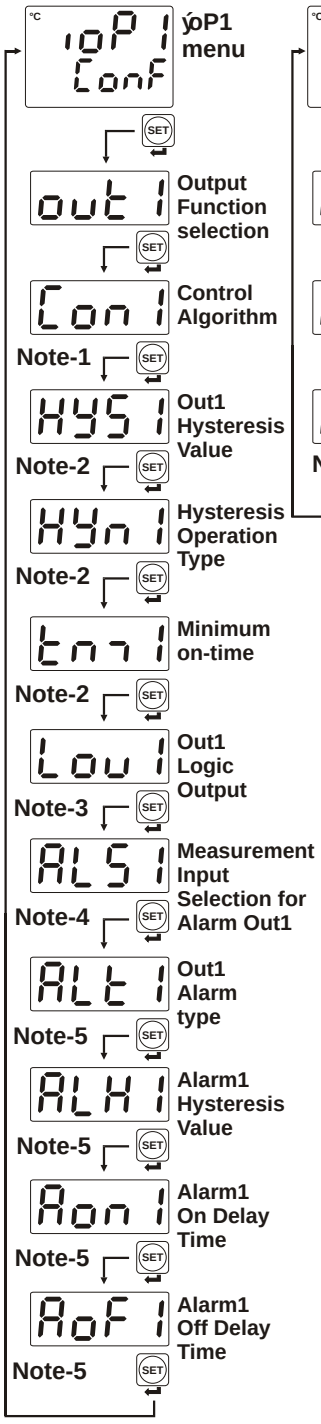

If EMO-430 Output Module is plugged in Module-1 socket

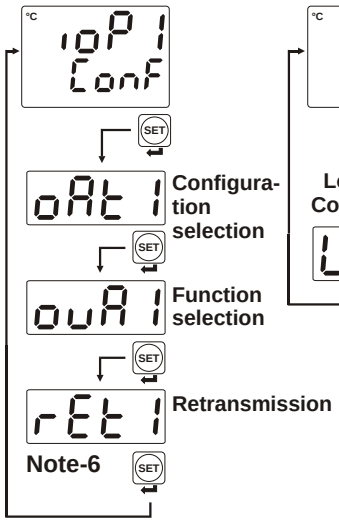

If EMI-400 Input Module is plugged in Module-1 socket

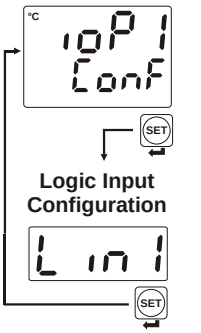

If EMI-410,430,440, 450 Input Module is plugged in Module-1 socket

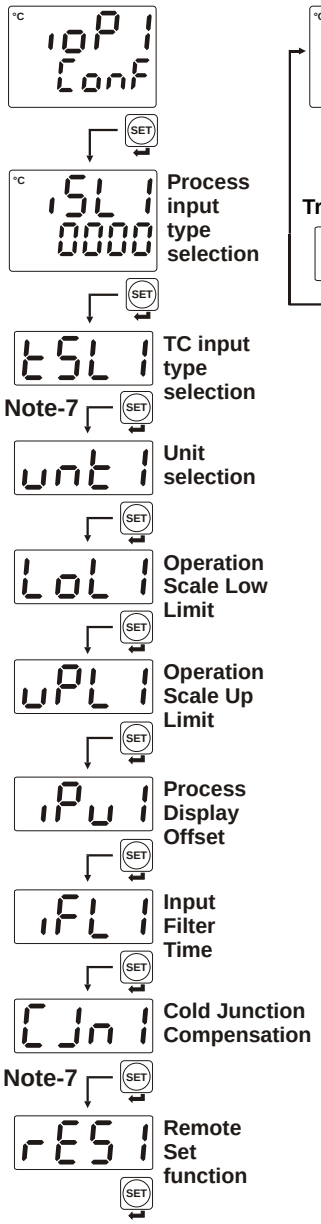

If EMI-420 Input Module is plugged in Module-1 socket

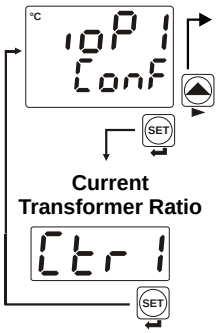

Note-1: It can be observed if out 1 is HEAt or CooL
Note-2:It can be observed if out 1 is HEAt or CooL and control type is on.oF
Note-3: It can be observed if out 1 is Lout
Note-4: It can be observed if out 1 is Lout , Lou 1 is 0000 and an analog input module is plugged in Module-2 socket
Note-5: It can be observed if out 1 is Lout and Lou 1 is 0000
Note-6: It can be observed if ouA1 is rEtr
Note-7:According to the iSL 1 parameter selection, another parameter can be observed instead of tSL 1 parameter and CJn 1 parameter can not be observed

7.6 Easy Access Diagram for ioP1 conF and ioP2 conF Parameters

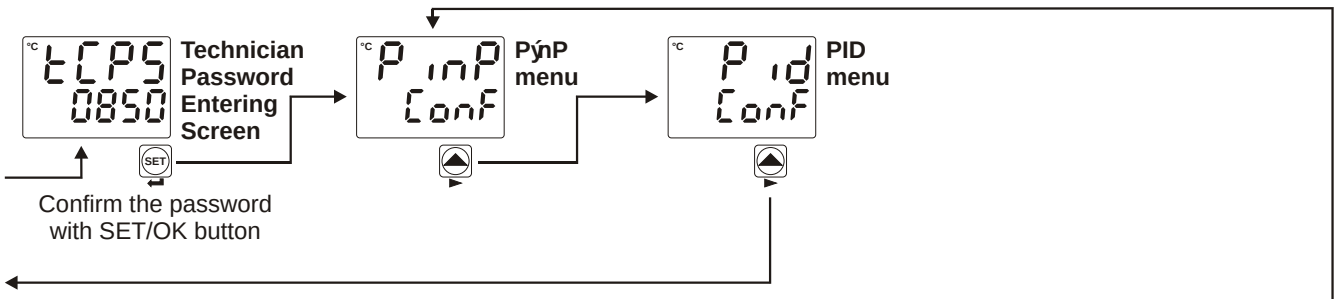

If EMO-400,410 or 420 module is plugged in Module-2 socket

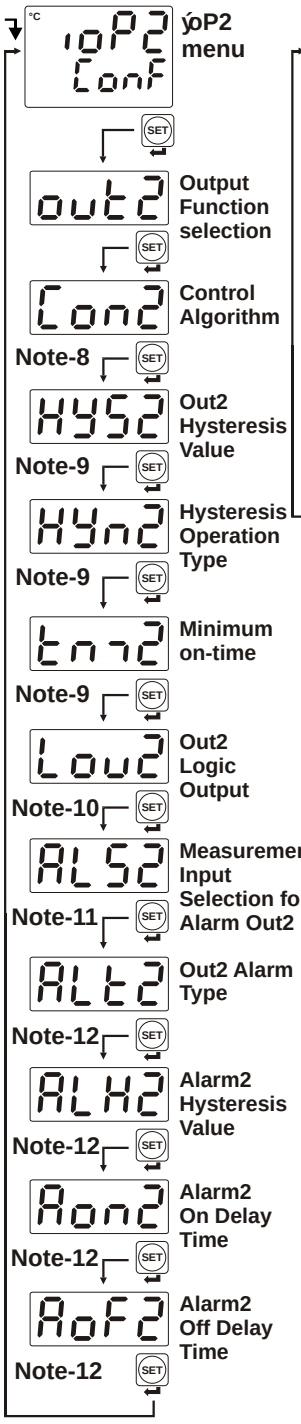

If EMO-430 Output Module is plugged in Module-2 socket

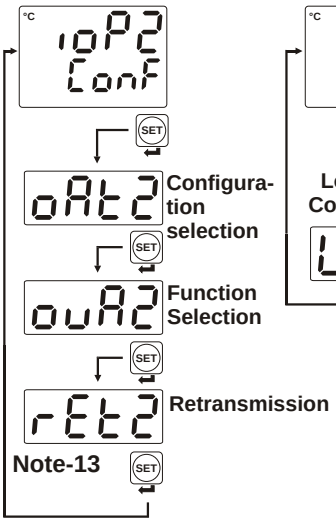

If EMI-400 Input Module is plugged in Module-2 socket

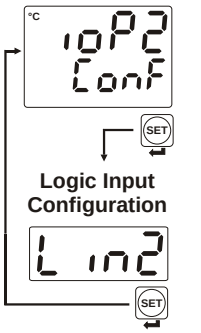

If EMI-410,430,440, 450 Input Module is plugged in Module-2 socket

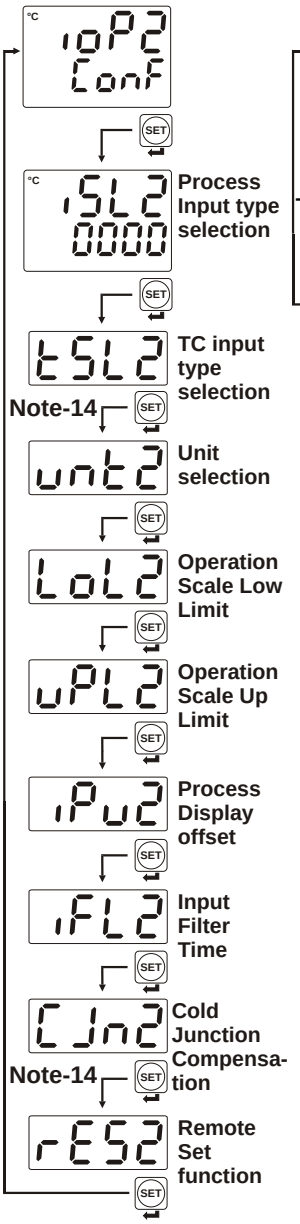

If EMI-420 Input Module is plugged in Module-2 socket

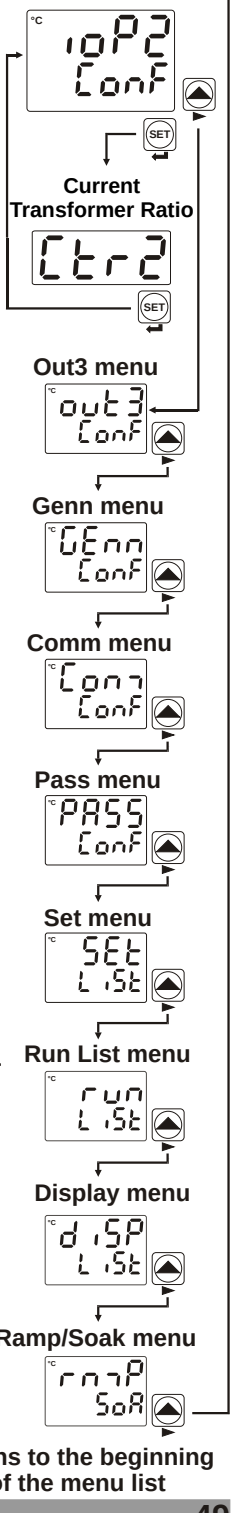

It turns to the beginning of the menu list

Note-8: It can be observed if out2 is HEAt or CooL

Note-9:It can be observed if out2 is HEAt or CooL and control type is onoF

Note-10: It can be observed if out2 is Lout

Note-11: It can be observed if out2 is Lout , Lou2 is 0000 and an analog input module is plugged in Module-1 socket

Note-12: It can be observed if out2 is Lout and Lou2 is 0000

Note-13: It can be observed if ouA2 is rEtr

Note-14:According to the iSL2 parameter selection, another parameter can be observed instead of tSL2 parameter and CJn2 parameter can not be observed

7.7 Accessing to the Operator Menu

The parameters have been divided into groups according to their functions. Every group has a title and firstly user must determine the title (menu) for accessing to the parameters. Refer to the parameters section for detailed information about parameters.

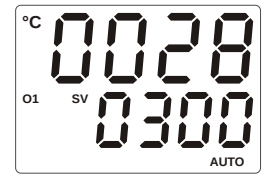

Operation Screen

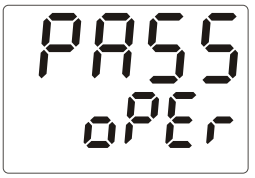

Operator Menu Entering Screen



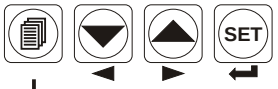

When menu button is pressed, Operator Menu Entering screen is shown.

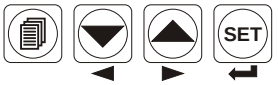

Operator Password Entering Screen is shown by pressing SET button.

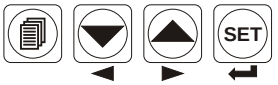

Enter password with increment and decrement buttons.

When oPPS screen is shown, operator parameters can be seen by pressing SET button without entering operator password. But parameters can not be changed. Please refer to Section 8.2.8. (Operator and Technician Passwords)



Operator Password

If Operator password is not 0, operator password entering screen is shown

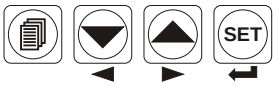

Press the Enter button to confirm password

Operator and technician can access to this menu.

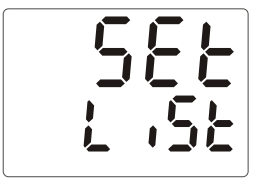

SET LIST Menu

Process and alarm set values are in SEt LýSt menu

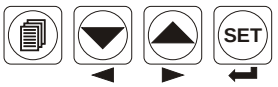

Operator or technician can access to the following menu by pressing menu changing next button

Operator and technician can access to this menu.

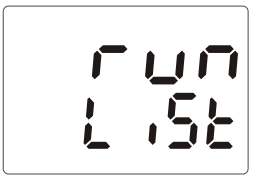

RUN LIST Menu

Operating form selection parameters are in run LýSt menu.

Operator or technician can access to the former menu by pressing menu changing back button

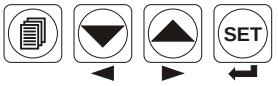

Operator or technician can access to the following menu by pressing menu changing next button

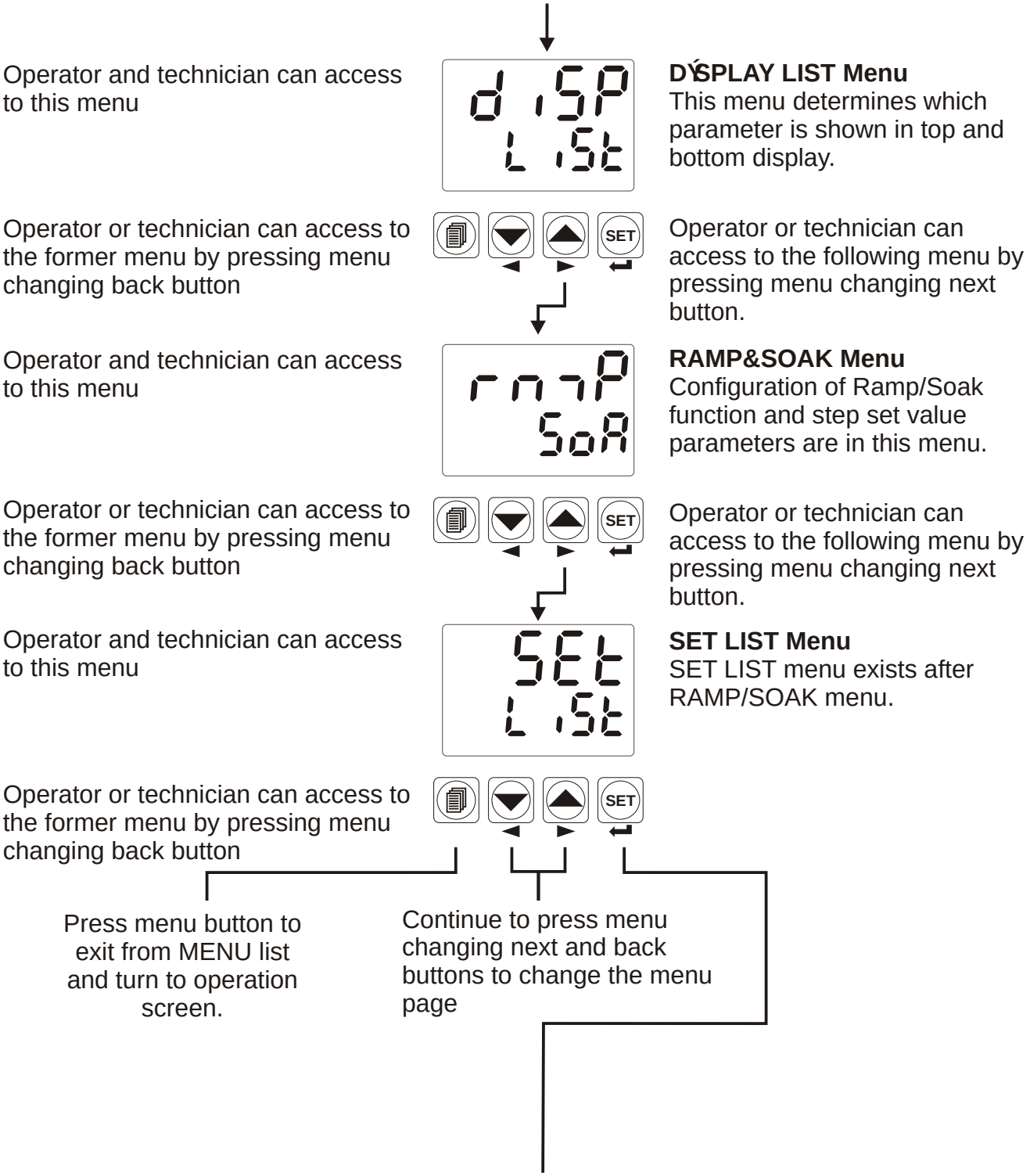
Operator and technician can access to this menu
dISP
LIST
DISPLAY LIST Menu
This menu determines which parameter is shown in top and bottom display.
Operator or technician can access to the former menu by pressing menu changing back button
SET
Operator or technician can access to the following menu by pressing menu changing next button.
Operator and technician can access to this menu
rAMP
SoAK
RAMP&SOAK Menu
Configuration of Ramp/Soak function and step set value parameters are in this menu.
Operator or technician can access to the former menu by pressing menu changing back button
SET
Operator or technician can access to the following menu by pressing menu changing next button.
Operator and technician can access to this menu
SEt
LIST
SET LIST Menu
SET LIST menu exists after RAMP/SOAK menu.
Operator or technician can access to the former menu by pressing menu changing back button
SET
Press menu button to exit from MENU list and turn to operation screen.
Continue to press menu changing next and back buttons to change the menu page
By pressing ENTER button, user can access to the menu page and to all parameters in this menu page.

7.8 Accessing to the Technician Menu

The parameters have been divided into groups according to their functions. Every group has a title and firstly user must determine the title (menu) for accessing to the parameters. Refer to the parameters section for detailed information about parameters.

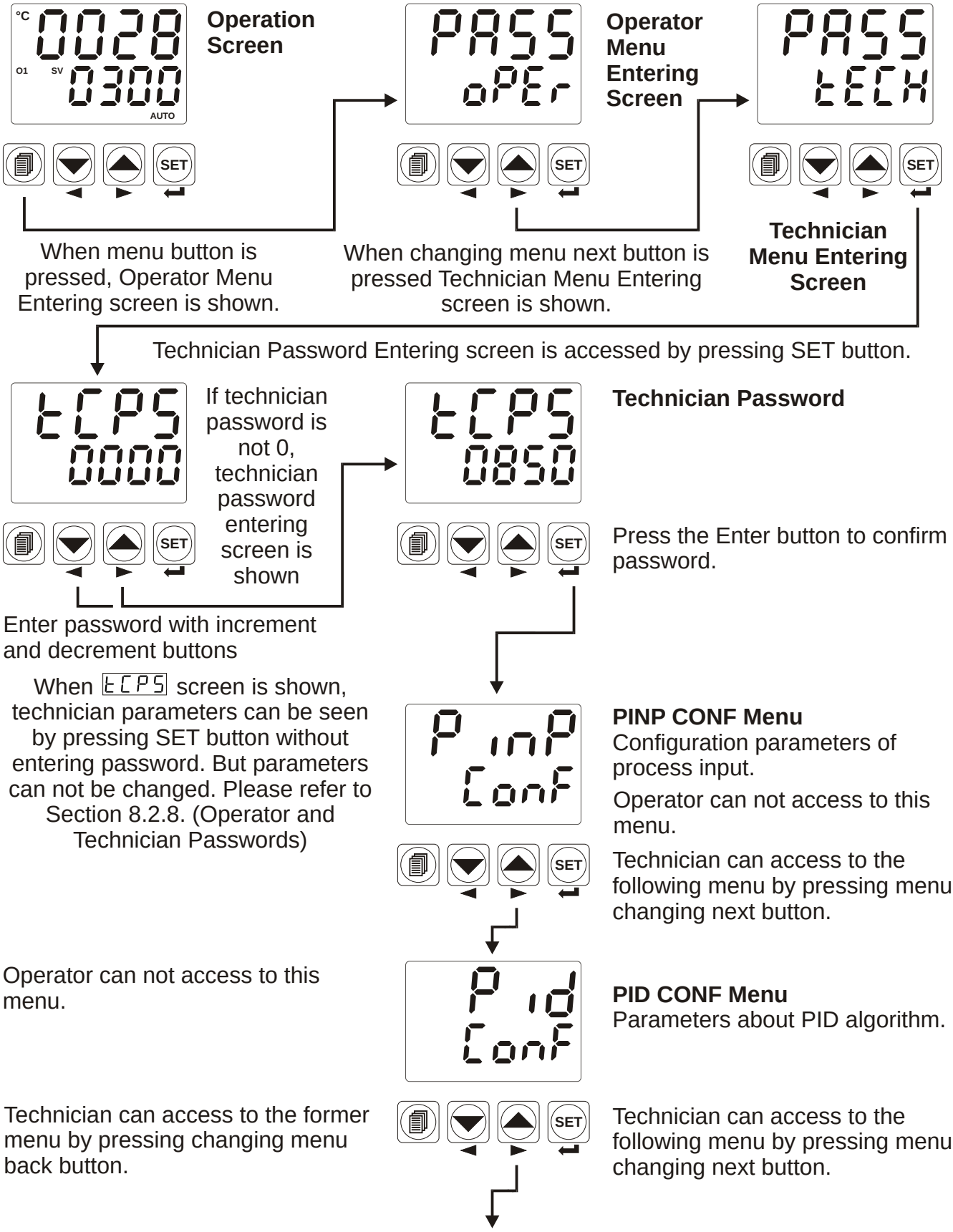

Operator can not access to this menu.

This menu is not visible if there is no module in Module-1 socket.

Technician can access to the former menu by pressing changing menu back button.

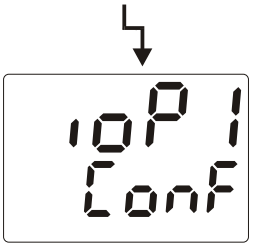

IOP1 CONF Menu
This menu defines configuration parameters of input/output modules in Module-1 socket.

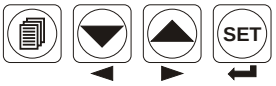

Technician can access to the following menu by pressing menu changing next button.

Operator can not access to this menu.

This menu is not visible if there is no module in Module-2 socket.

Technician can access to the former menu by pressing changing menu back button.

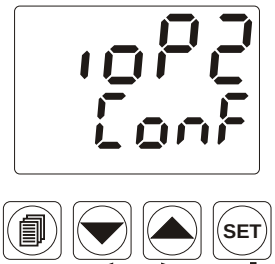

IOP2 CONF Menu
This menu defines configuration parameters of input/output modules in Module-2 socket.

Technician can access to the following menu by pressing menu changing next button.

Operator can not access to this menu.

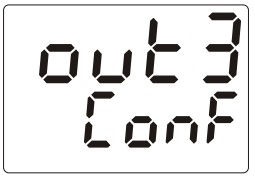

OUT3 CONF Menu
This menu defines configuration parameters of output-3.

Technician can access to the former menu by pressing changing menu back button.

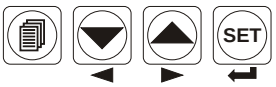

Technician can access to the following menu by pressing menu changing next button.

Operator can not access to this menu.

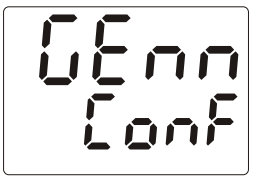

GENN CONF Menu
This menu defines general parameters

Technician can access to the former menu by pressing changing menu back button.

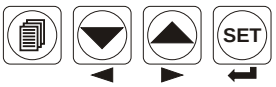

Technician can access to the following menu by pressing menu changing next button.

Operator can not access to this menu.



COM CONF Menu
This menu defines configuration parameters for serial communication

Technician can access to the former menu by pressing changing menu back button.

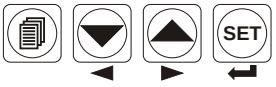

Technician can access to the following menu by pressing menu changing next button.

Operator can not access to this menu.

This menu is not visible if Technician Parameters Section is entered by pressing SET button without entering Technician Password.

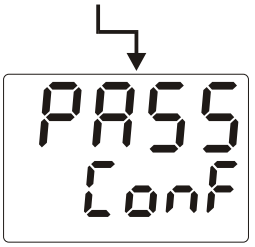

PASS CONF Menu
Operator and technician passwords are in this menu.

Operator and technician can access to the former menu by pressing menu changing back button.

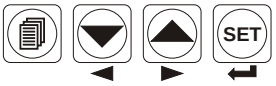

Operator and technician can access to the following menu by pressing menu changing next button

Operator and technician can access to this menu.



SET LIST Menu
Process and alarm set values are in SET LIST menu.

Operator and technician can access to the former menu by pressing menu changing back button.

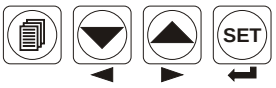

Operator and technician can access to the following menu by pressing menu changing next button

Operator and technician can access to this menu.

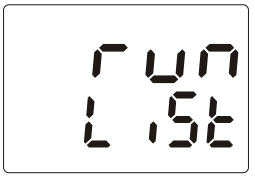

RUN LIST Menu
Operating form selection parameters are in RUN LIST menu.

Operator and technician can access to the former menu by pressing menu changing back button.

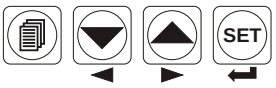

Operator and technician can access to the following menu by pressing menu changing next button

Operator and technician can access to this menu.



DISP LIST Menu
It defines which parameter will be shown on top and bottom displays.

Operator and technician can access to the former menu by pressing menu changing back button.

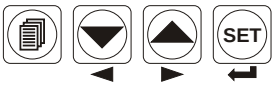

Operator and technician can access to the following menu by pressing menu changing next button

Operator and technician can access to this menu.

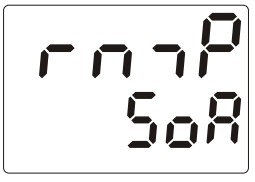

Ramp&Soak Menu
Configuration of Ramp/Soak functions and step set value parameters are in this menu.

Operator and technician can access to the former menu by pressing menu changing back button.

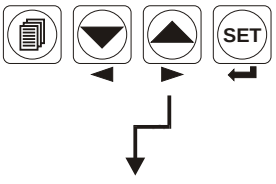

Operator and technician can access to the following menu by pressing menu changing next button

Operator can not access to this menu.

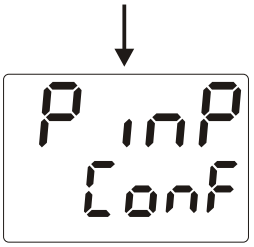

PINP CONF Menu
PINP CONF Menu exists after RAMP/SOAK menu.

Technician can access to the former menu by pressing menu changing back button.

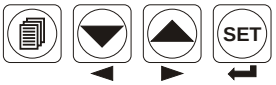

Press Menu button to exit from Menu list and turn to operation screen.

Continue to press menu changing next and back buttons to change the menu page

By pressing ENTER button, user accesses to the menu and to all parameters in this menu.

7.9 Adjustment of Alarm Set Values

If standard output (Output-3), Module-1 or Module-2 is configured as an alarm output, alarm set values of these outputs are in “SEt LýSt” menu. User can access to “SEt LýSt” menu both from operator and technician menus.

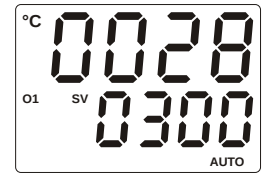

Operation Screen

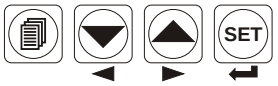

When menu button is pressed, Operator Menu Entering screen is shown

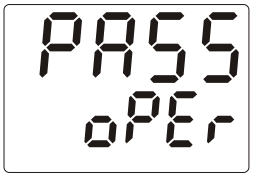

Operator Menu Entering Screen

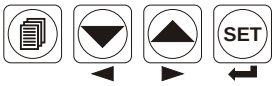

Operator Password Entering screen is accessed by pressing SET button.

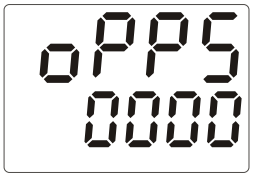

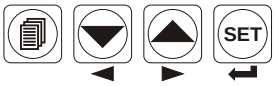

Enter password with increment and decrement buttons.

When oPPS screen is shown, operator parameters can be seen by pressing SET button without entering operator password. But operator can not change the parameters. Please refer to Section 8.2.8 (Operator and Technician Passwords)

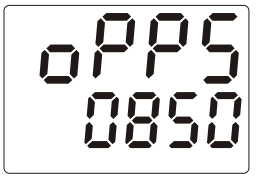

Operator Password

If Operator password is not 0, operator password entering screen is shown

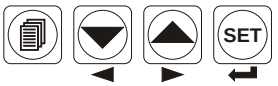

Press Enter button to confirm password

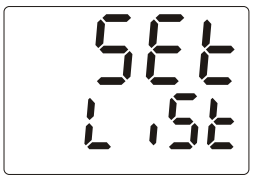

SET LIST Menu
Process and alarm set values are in SEt LýSt menu.

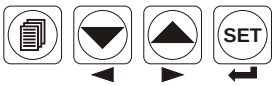

Press Enter button for accessing SEt LýSt menu

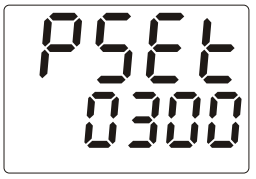

Process Set Value

Operator and technician can change the parameter with increment and decrement buttons

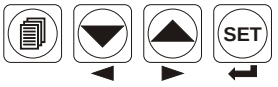

Press Enter button to confirm the changed value and access to the following parameter.

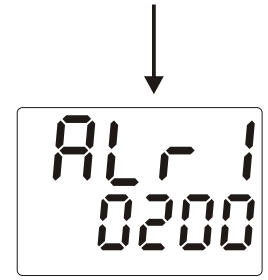

Alarm-1 Set Value

This parameter is not visible if there is no output module in Module-1 socket or output module is not configured as an alarm output.

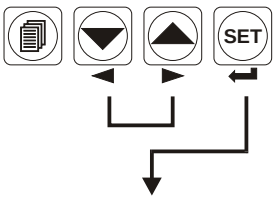

Operator and technician can change the parameter with increment and decrement buttons.

Press Enter button to confirm the changed value and access to the following parameter.

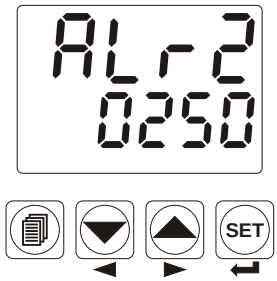

Alarm-2 Set Value

This parameter is not visible if there is no output module in Module-2 socket or output module is not configured as an alarm output.

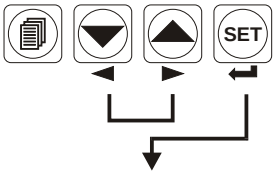

Operator and technician can change the parameter with increment and decrement buttons.

Press Enter button to confirm the changed value and access to the following parameter.



Alarm-3 Set Value

This parameter is not visible if Output-3 is not configured as an alarm output

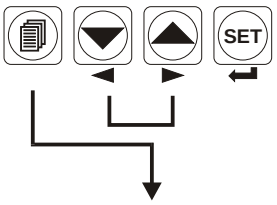

Press menu button to turn to operation screen

Operator and technician can change the parameter with increment and decrement buttons.

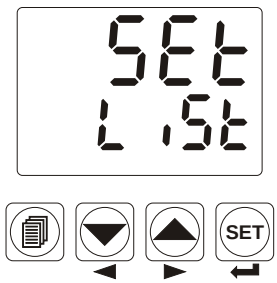

SET LIST Menu

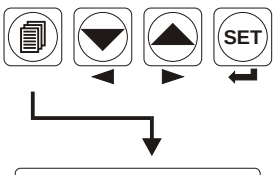

Press menu button to turn to operation screen



Operation Menu

7.10 Changing and Saving Parameter Values

Example-1 : To change Process Input Type parameter [iSSL] in **"**PýnP Conf" menu, user must access to PýnP ConF menu firstly.

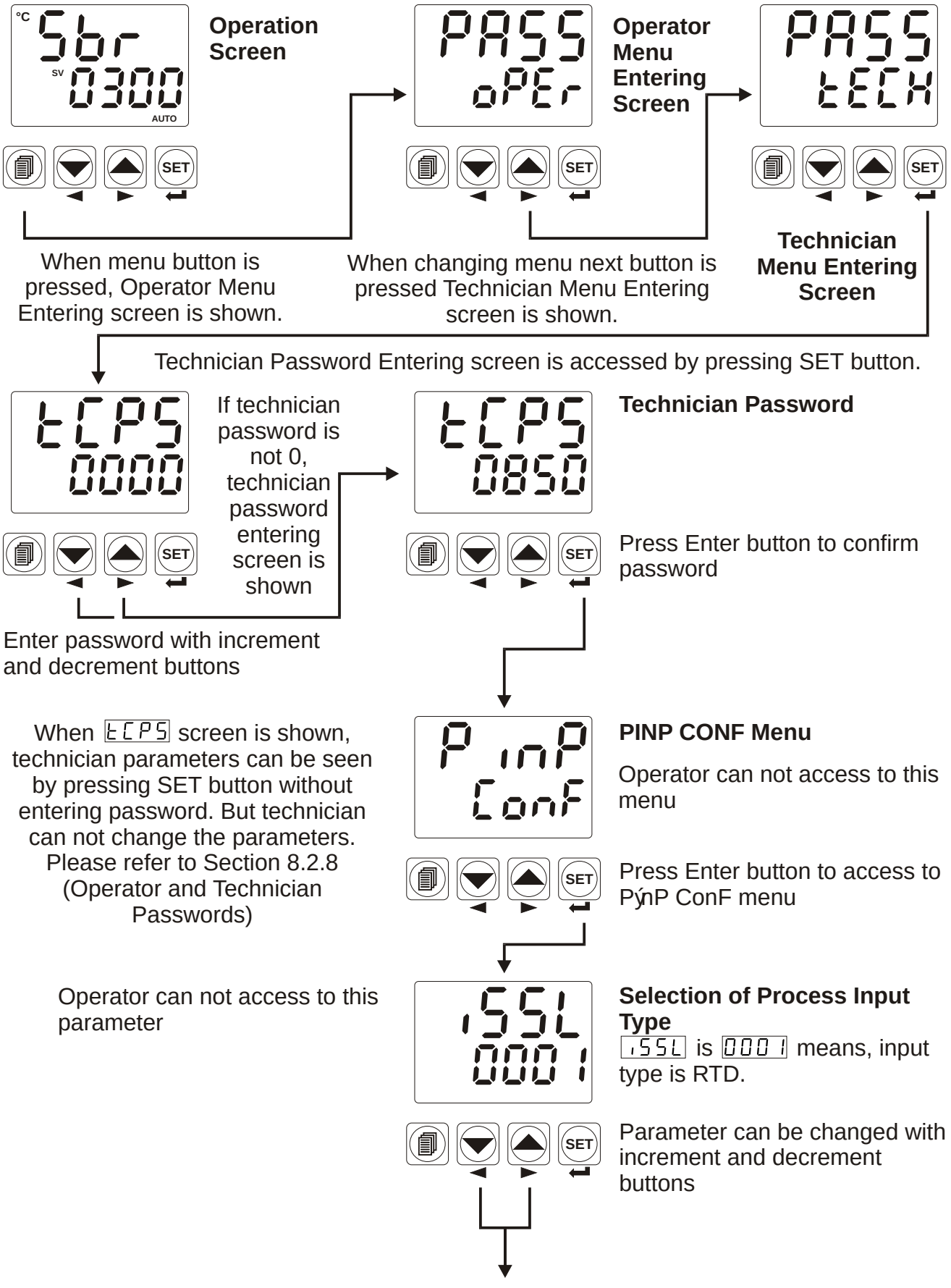

Operator can not access to this parameter



Selection of Process Input Type
TC input type is selected

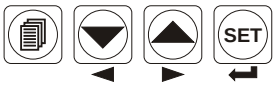

Press Enter button to confirm the changed value and access to the following parameter.

Operator can not access to this parameter



Selection of TC Input Type

PINP CONF Menu
When Menu button is pressed, menu page can be accessed.

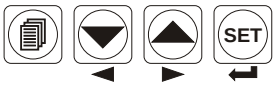

Technician can access to the following menu by pressing Enter button



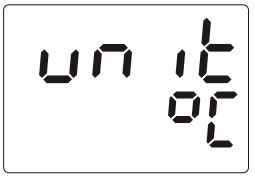

Unit selection

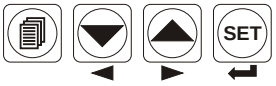

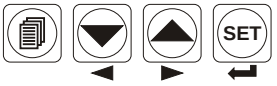

If Menu button is pressed again, operation screen is shown.

Continue to press menu changing next and back buttons to change the menu page.

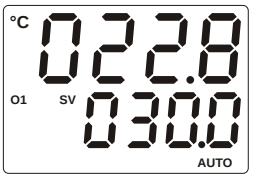

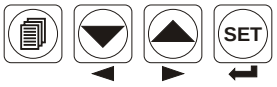

Operation Screen

Example-2 : To change heating proportional band parameter P-Ht in **"**Pýd Conf" menu.

P-Ht Parameter is on Pýd ConF menu. For accessing to this parameter, user must access to "Pýd ConF" menu firstly.

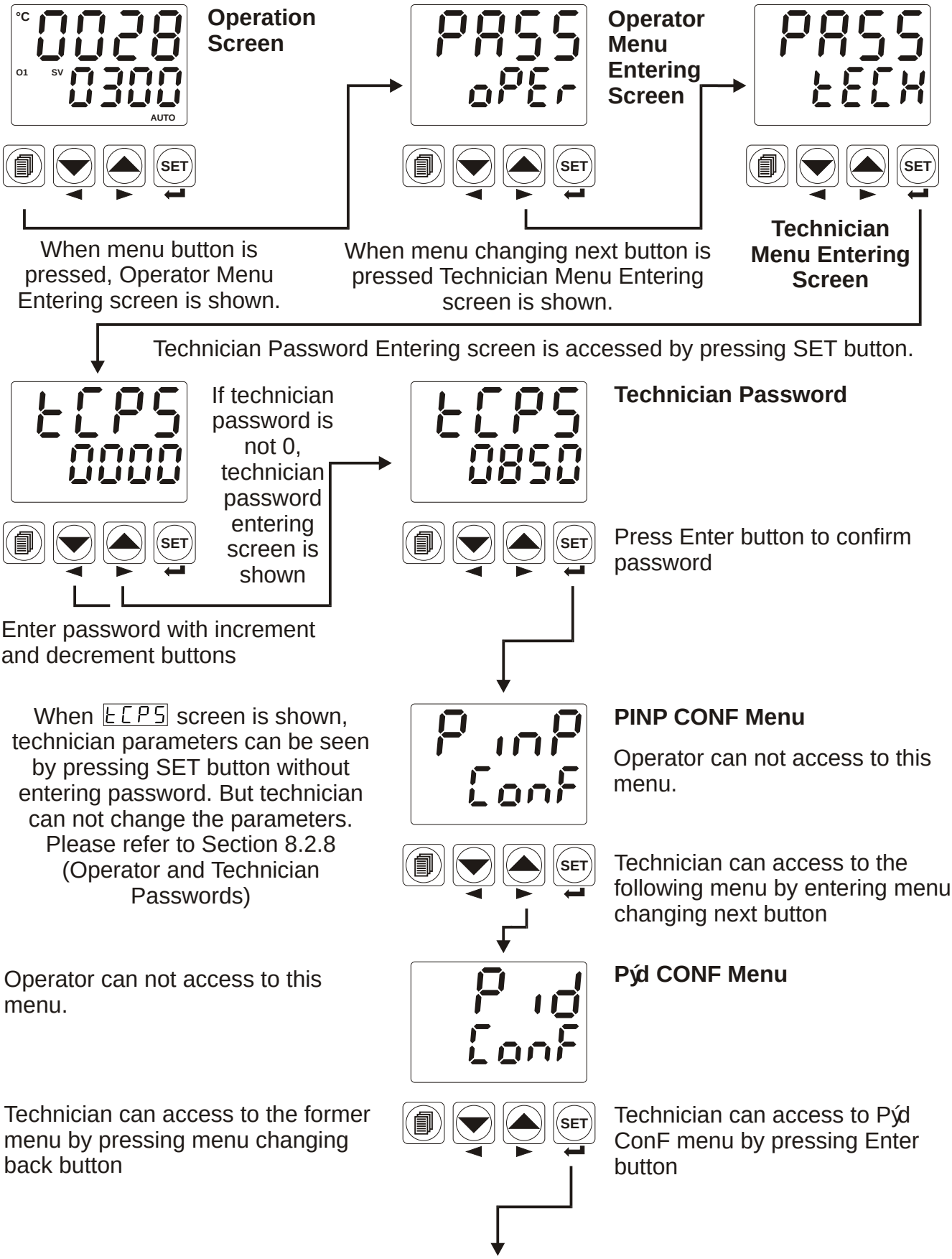

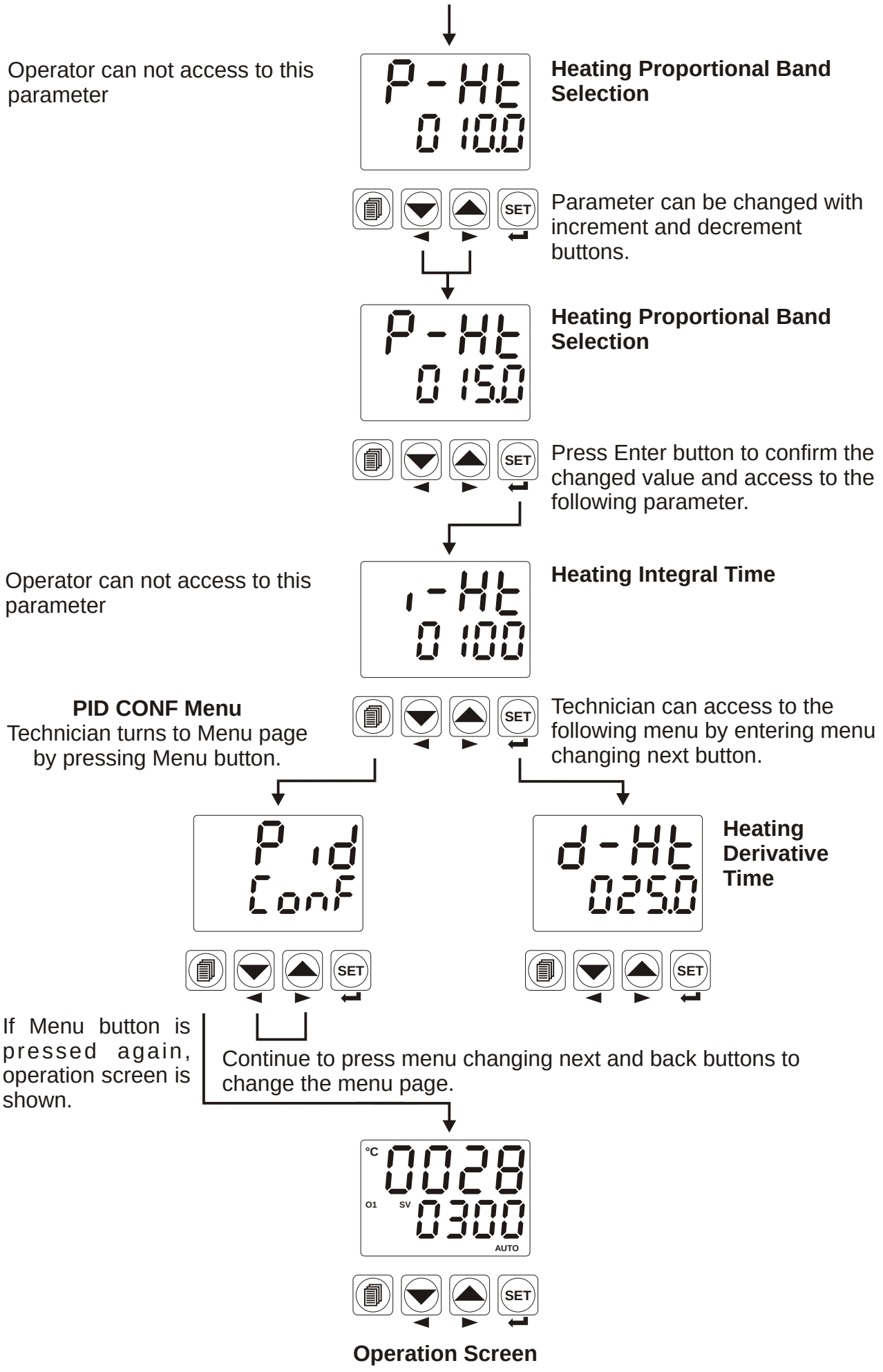
Operator can not access to this parameter
P-Ht
0 10.0
Heating Proportional Band Selection
SET
Parameter can be changed with increment and decrement buttons.
P-Ht
0 15.0
Heating Proportional Band Selection
SET
Press Enter button to confirm the changed value and access to the following parameter.
Operator can not access to this parameter
i-Ht
0 100
Heating Integral Time
PID CONF Menu
Technician turns to Menu page by pressing Menu button.
SET
Technician can access to the following menu by entering menu changing next button.
Pid
Conf
d-Ht
025.0
Heating Derivative Time
SET
SET
If Menu button is pressed again, operation screen is shown.
Continue to press menu changing next and back buttons to change the menu page.
°C
0028
O1
SV
0300
AUTO
SET
Operation Screen

Example-3 : To change ⎓ Voltage / Current Input Calibration Type Selection parameter uCAL in **"**PýnP Conf" menu

uCAL Parameter is on "PýnP ConF" menu. For accessing to this parameter, technician must access to "PýnP ConF" menu firstly. In this example, changing input type of a device from thermocouple to ⎓Voltage/Current and dual point calibration selection is shown.

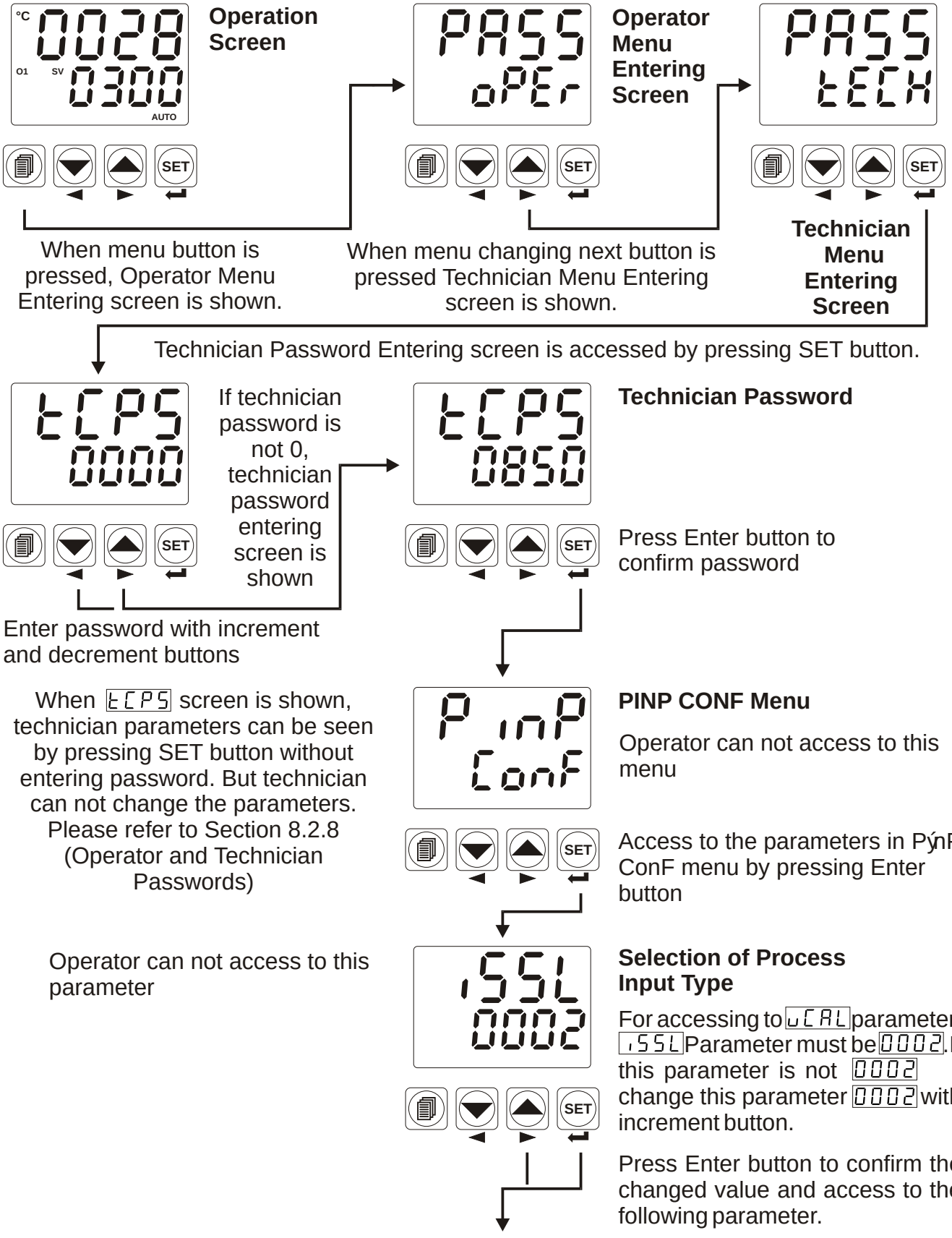

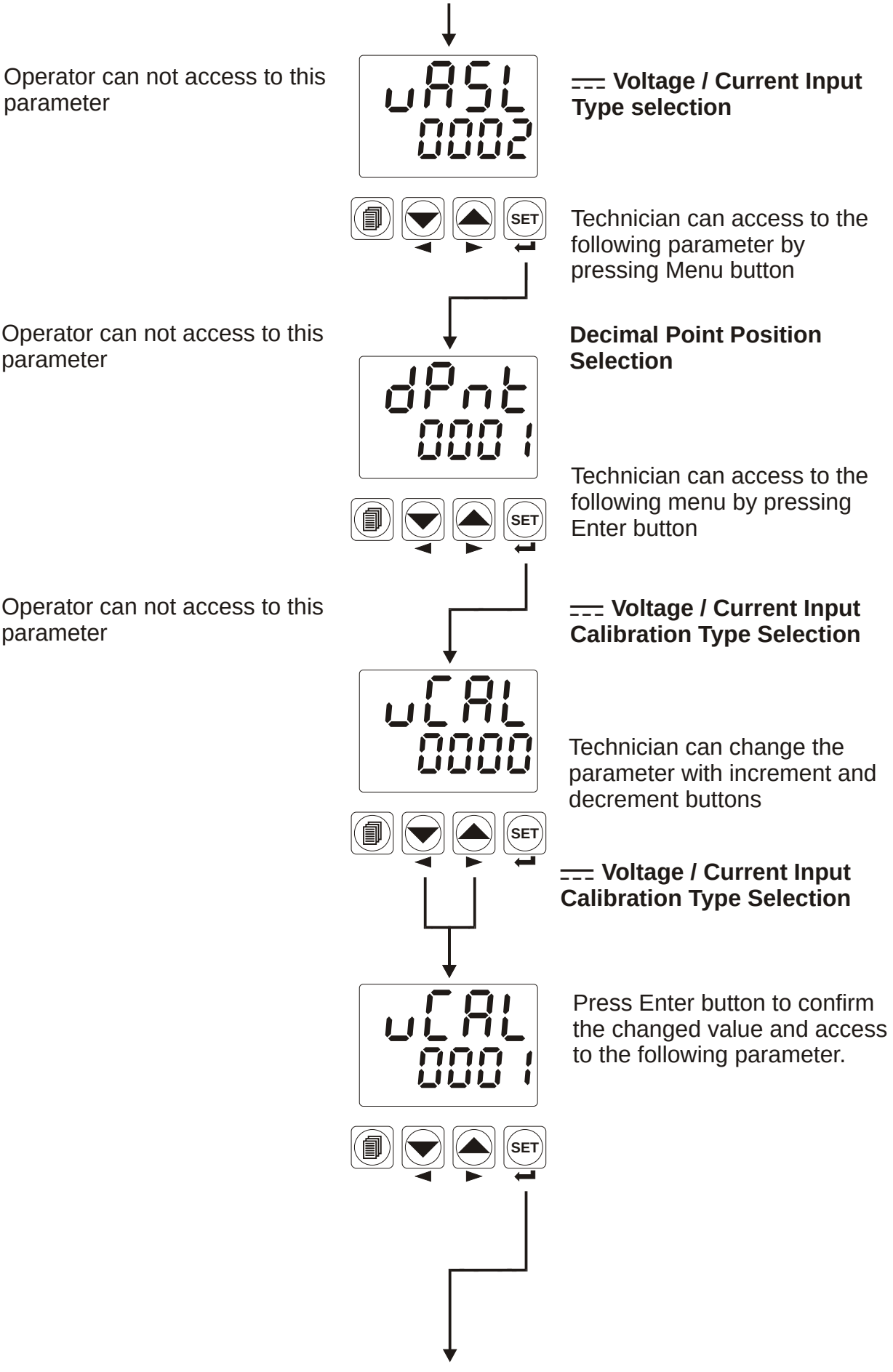
Operator can not access to this parameter
vASL
0002
Voltage / Current Input Type selection
SET
Technician can access to the following parameter by pressing Menu button
Operator can not access to this parameter
dPnt
0001
Decimal Point Position Selection
Technician can access to the following menu by pressing Enter button
SET
Operator can not access to this parameter
Voltage / Current Input Calibration Type Selection
vCAL
0000
Technician can change the parameter with increment and decrement buttons
SET
Voltage / Current Input Calibration Type Selection
vCAL
0001
Press Enter button to confirm the changed value and access to the following parameter.
SET

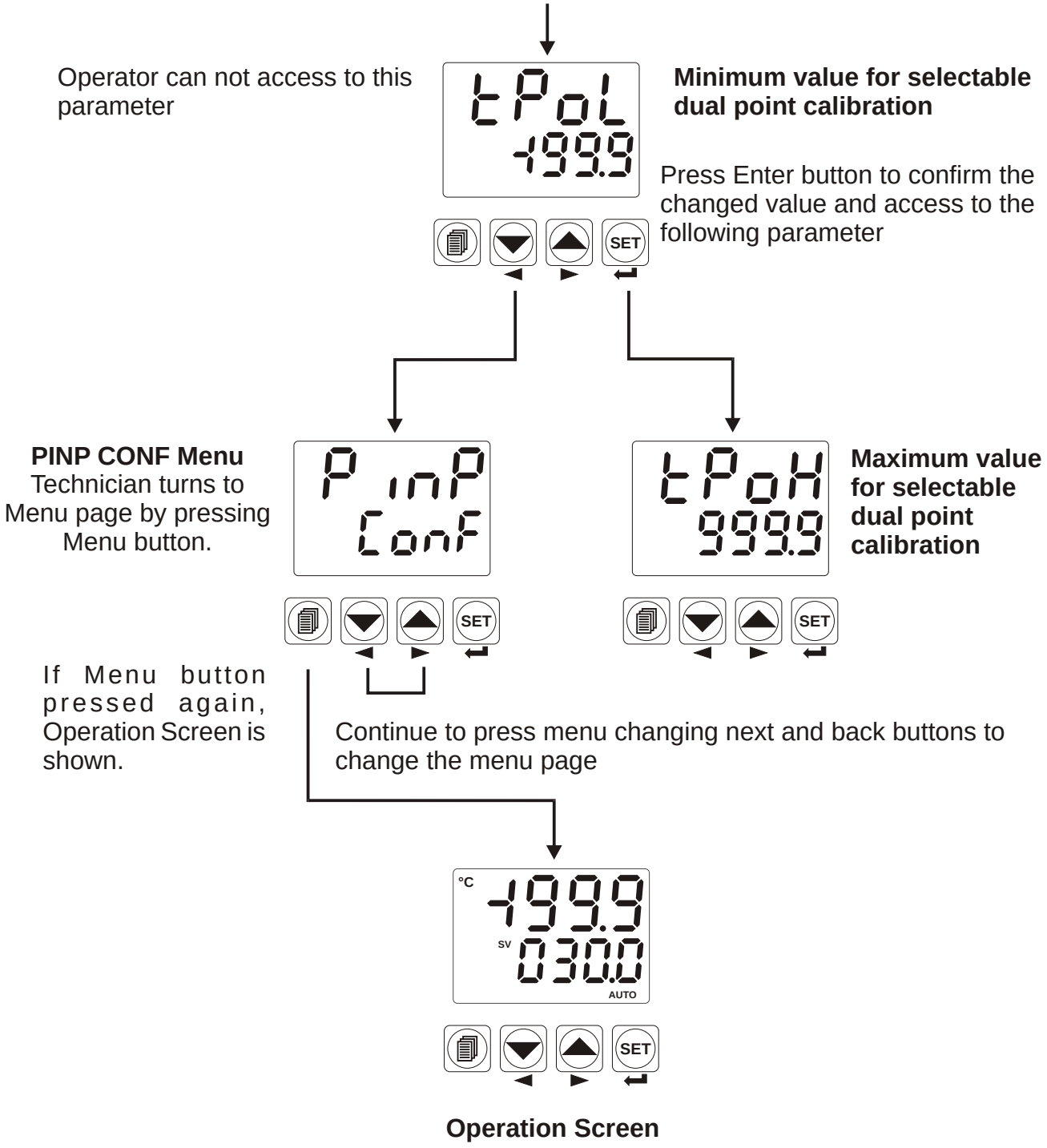
Operator can not access to this parameter
tPoL
-199.9
Minimum value for selectable dual point calibration
Press Enter button to confirm the changed value and access to the following parameter
SET
PINP CONF Menu
Technician turns to Menu page by pressing Menu button.
PinP
ConF
tPoH
999.9
Maximum value for selectable dual point calibration
If Menu button pressed again, Operation Screen is shown.
Continue to press menu changing next and back buttons to change the menu page
°C
-199.9
SV
030.0
AUTO
Operation Screen

8. Parameters

Parameters are divided into two groups. These can be accessed by operator and technician. Also, they are grouped into subgroups according to their functions. The subgroups are named as menu pages.

8.1 Operator Parameters

SEt
LiSt

8.1.1 Process and Alarm SET Parameters

PSEt

This is the device's process set value. Controlling is done according to this value by process control outputs.

Process set value can be adjusted from minimum value of set scale SU-L to maximum value of set scale SU-u

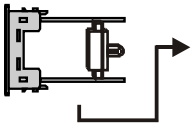

EMO-400
EMO-410
EMO-420

ALr 1

If EMO-400 Relay, EMO-410 SSR Driver or EMO-420 Digital (Transistor) output module is plugged in Module-1 socket and output is configured as an alarm output, this parameter defines the set value of the alarm output.

ALr 1 Set value can be adjusted from minimum value of set scale SU-L to maximum value of set scale SU-u

MODULE-2

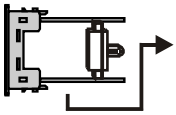

EMI-410
EMI-430
EMI-440
EMI-450

If one of the analogue input modules is plugged in Module-2 socket and measurement input selection parameter ALS1 which is explained in Section 8.2.3 for Module-1 alarm output, is 0001, ALr 1 can be defined alarm set value for analogue input module in Module-2.

ALr 1 Parameter can be adjusted from minimum set value of 2nd sensor input SUL2 to maximum set value of 2nd sensor input SUu2 . Also point position of ALr 1 parameter and measured value from analogue input module (2nd sensor input) is the same.

In this conditions, alarm output operates according to 2nd sensor input value and ALr 1 parameter.

MODULE-2

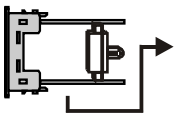

EMI-420

Set value of Heating Failure Alarm

If ∿CT input module (EMI-420) is plugged in Module-2 socket and Module-1 alarm type parameter ALt 1 which is explained in Section 8.2.3 is 0006 , ALr 1 parameter can be adjusted from 0.0 to 100.0A∿

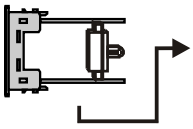

EMO-400
EMO-410
EMO-420

If EMO-400 Relay, EMO-410 SSR Driver or EMO-420 Digital (Transistor) output module is plugged in Module-2 socket and output is configured as an alarm output, this parameter defines the set value of the alarm output.

ALr2 Set value can be adjusted from minimum value of set scale SU-L to maximum value of set scale SU-u

MODULE-1

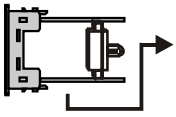

EMI-410
EMI-430
EMI-440
EMI-450

If one of the analogue input modules is plugged in Module-1 socket and measurement input selection parameter AL52 ,which is explained in Section 8.2.3 for Module-1 alarm output, is 0001, ALr2 can be defined alarm set value for analogue input module in Module-2.

ALr2 Parameter can be adjusted from minimum set value of 2nd sensor input SUL2 and maximum set value of 2nd sensor input SUu2 Also point position of ALr2 parameter and measured value from analogue input module (2nd sensor input) is the same.

In this conditions, alarm output operates according to 2nd sensor input value and ALr2 parameter.

MODULE-1

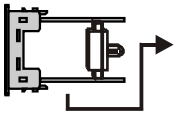

EMI-420

Set value of Heating Failure Alarm

If ∼CT input module (EMI-420) is plugged in Module-1 socket and Module-1 alarm type parameter ALt2 which is explained in Section 8.2.3 is 0006 , ALr2 parameter can be adjusted from 0.0 to 100.0A∼

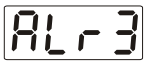

If OUT-3 relay output module is configured as alarm output, this parameter defines the set value of the alarm output.

ALr3 Set value can be adjusted from minimum value of set scale SU-L to maximum value of set scale SU-u

MODULE-1
or
MODULE-2

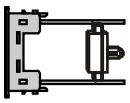

EMI-410
EMI-430
EMI-440
EMI-450

If one of the analogue input modules is plugged in Module-1 or Module-2 socket and measurement input selection parameter AL53 which is explained in Section8.2.5 for Module-1 alarm output is 0001 , ALr3 can be defined alarm set value for analogue input module in Module-1 or Module-2 socket.

ALr3 Parameter can be adjusted from minimum set value of 2nd sensor input SUL2 and maximum set value of 2nd sensor input SUu2 Also point position of ALr3 parameter and measured value from analogue input module (2nd sensor input) is the same.

In this conditions, alarm output operates according to 2nd sensor input value and ALr3 parameter.

MODULE-1
or
MODULE-2

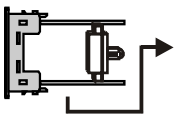

EMI-420

Set value of Heating Failure Alarm

If ∼CT input module (EMI-420) is plugged in Module-1 or Module-2 socket and Module-1 alarm type parameter ALt3 which is explained in Section 8.2.3 is 0006 , ALr3 parameter can be adjusted from 0.0 to 100.0A∼

run
LiSt

8.1.2 Selection of PID Tune and Operation Form

tunn **TUNE SELECTION**

By selecting one of the methods below, device can determine the PID parameters.

no Device operates according to the defined PID parameters

Atun **Auto tune** (Limit Cycle Tuning) operation

Stun **Self tune** (Step Response Tuning) operation

At.St **Auto-Self Tune**

Self Tune operation is performed, if the conditions are realized when power on firstly. In normal operation, it controls the tune conditions in **Auto Tune** selection which explained below. If any of the conditions is realized, it performs the **Auto Tune** operation.

AtAn **AUTOMATIC TUNE SELECTION**

no Device does not do Atun (Limit Cycle Tuning) operation or while Atun operation runs, this selection is adjusted no and **Auto Tune** operation is canceled.

YES If tunn parameter is Atun or At.St , when the conditions for Auto Tune parameter that are explained in Tune Methods section are realized, it starts to perform Auto Tune (Limit Cycle Tuning) operation.

TUNE METHODS :

There are 2 different methods for determining PID parameters by the device. These are **Auto tune** (Limit Cycle Tuning) and **Self Tune** (Step Response Tuning) methods.

Determining of PID parameters with **Auto Tune** is started in these conditions :
1- By the user in any time,
2- By the device when system gets unstable and starts oscillation
If process value is out of **Set ± Process value stabilisation** Strn value (Please refer to Section 8.2.2) and starts to oscillate, then device changes the AtAn Parameter to YES and Auto Tune operation is started.
3- After changing set value, if difference between newly defined set value and former set value is greater than proportional band, device will start it.

If set value is changed to a value that is greater than;
± [Scale * (Heating or Cooling Proportional Band)] /1000 value,
AtAn Parameter is adjusted YES by the device and **Auto Tune** operation is started.

For Auto Tune (Limit Cycle Tuning) operation :
1- Tune selection parameter tunn in "run List" menu must be selected Atun **Auto tune** or At.St **Auto-Self tune** .
2 - For being started Tune operation (Auto Tune or Self Tune) control form must be P, PI, PD or PID.
3 - If process set value is changed while Tune operation is being performed, Tune operation is canceled

Example -1 : Starting Auto Tune operation by the user ;

- Enter operator or technician menu.
- Adjust tune selection parameter [tunn] in "run List" menu , **Auto Tune** [Atun] Or **Auto-Self Tune** [At.St]
- Adjust automatic tune selection parameter [Atn] in "run List" menu [YES] And return to main operation screen.
- Observe that "AT" led is active.

If **Auto Tune** operation finishes without any problem, device saves the PID coefficients to memory and continue to run. [Atn] Parameter is adjusted [no] automatically.

Canceling **Auto Tune** operation:
1- If sensor breaks ;
2- If **Auto Tune** operation can not be completed in 8 hours
3- If user adjusts [tunn] parameter [no] or [Stun]
4- If user adjusts [Atn] parameter [no]
5- If process set value is changed while Tune operation is being performed
6- While Tune operation is being performed, if operation type selection is changed as "Manual" when it is "Automatic" (If operation type selection is changed as "Automatic" when it is "Manual", then Tune operation is started again)
7- If output function is changed while Tune operation is being performed (Heat Cool, Cool Heat)
8- While Tune operation is being performed, if control form is changed as "ON/OFF" when it is "PID" (If control form is changed as "PID" when it is "ON/OFF", the Tune operation is started again)
Auto Tune is canceled. Then, without doing any changes in PID parameters and [Atn] Parameter, device continues to run with former PID parameters.

Auto Tune (Limit Cycle Tuning) operation ;
Process control output runs according to heating if heating or heating-cooling function and PID control form is selected,
Process control output runs according to cooling if cooling function and PID control form is selected.

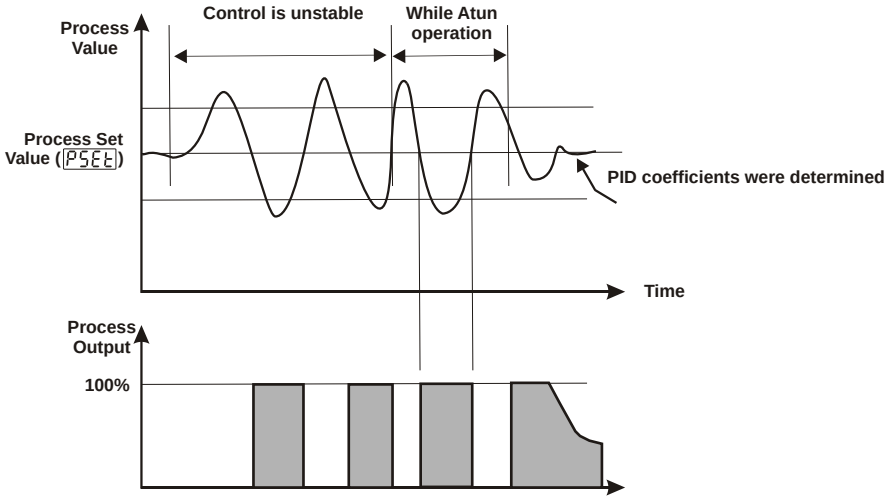

For Auto Tune (Limit Cycle Tuning) operation :
1- Tune selection parameter [tunn] in "run List" menu must be selected [Atun] **Auto tune** or [At.St] **Auto-Self tune** .
2 - For being started Tune operation (Auto Tune or Self Tune) control form must be P, PI, PD, PID.
3 -If process set value is changed while Tune operation is being performed, Tune operation is canceled

Self Tune (Step Response Tuning) :
When power is on, while process value starts to change for being equal to process set value, PID parameters are determined by the device with **Self Tune** method.
For starting **Self Tune (Step Response Tuning)** operation firstly power the device off and then on. Also difference between process value and set value must be too much.

Example 2 : Determination of PID parameters with Self Tune method

- Enter operator or technician menu
- Select tune selection parameter tunn in "run List" menu Stun or AtSt and turn to operation screen.
- Power off the device.
- Wait system to be in first conditions.
  (For example : Decreasing of the temperature to ambient temperature while controlling the temperature)
- Apply power to the device
- See that "AT" led is active

If heating or heating-cooling function and PID control form is selected for the system;
If set value is greater than process value, process output becomes active till to the **Temperature+[(Set - Temperature) / 2]** value. When process value reaches to this value, process output reduces to 0% and it calculates the PID coefficients.

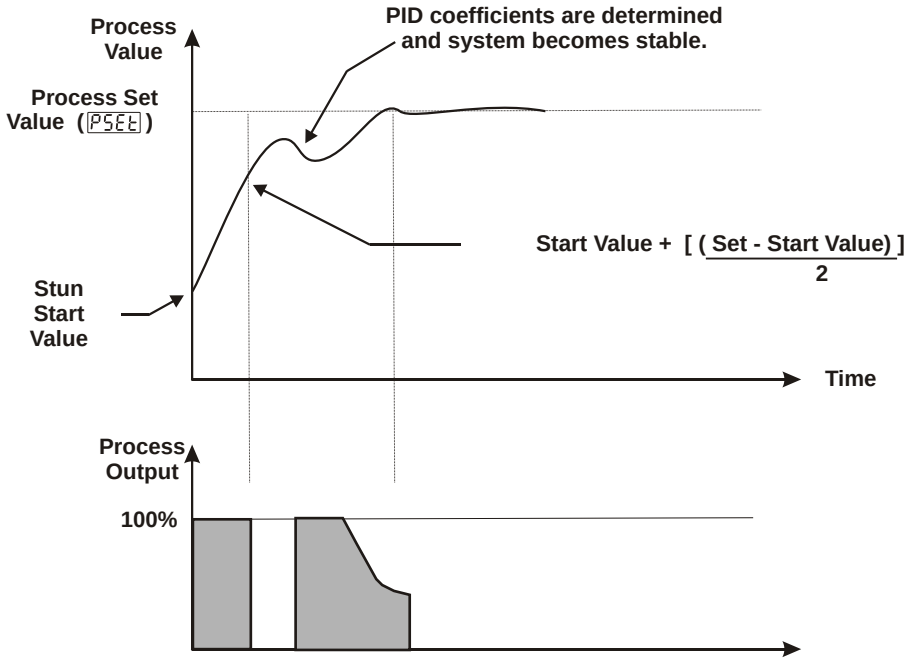

If cooling function and PID control form is selected for the system;
If set value is less than process value, process output becomes active till to the **Temperature - [(Set - Temperature) / 2]** value. When process value reaches to this value, process output is reduced to 0% and it calculates PID coefficients.

For Self Tune (Step Response Tuning) operation :
1 - Tune selection parameter tunn in "run List" menu must be selected **Self tune** Stun or **Auto-Self Tune** AtSt
2 - For **Self Tune (Step Response Tuning)** operation, firstly power off and then apply power to the device.
3 - For being started Tune operation (Auto Tune or Self Tune) control form must be P, PI, PD or PID.
4- If process set value is changed while Tune operation is being performed, Tune operation is canceled

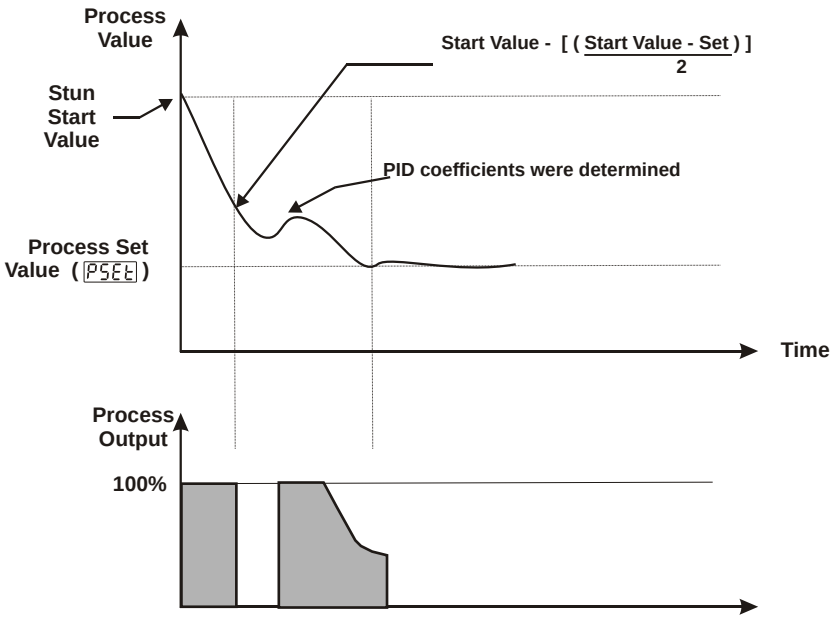

If **Self Tune** operation is finished without any problem, device saves new PID parameters to memory and runs. It changes tunn parameter.
If tunn parameter is Stun it is changed to no , if it is At.St , it is changed to Atun

If **Self Tune** operation is interrupted at half, PID parameters and tunn parameter are not changed, device continues to run with former PID parameters. When power is off and then on, device starts to complete the **Self Tune** operation.

Canceling **Self Tune** operation :
1- If sensor breaks ;
2- If **Self Tune** operation can not be completed in 8 hours ;
3- While heating **Self Tune** operation is running, if process value becomes greater than Set value ;
4- While cooling **Self Tune** operation is running, if process value becomes less than Set value ;
5- If user selects tunn parameter no or Atun
6- If process set value is changed while Tune operation is being performed
7- While Tune operation is being performed, if operation type selection is changed as "Manual" when it is "Automatic"
8- If output function is changed while Tune operation is being performed (Heat Cool, Cool Heat)
9- While Tune operation is being performed, if control form is changed as "ON/OFF" when it is "PID" (If control form is changed as "PID" when it is "ON/OFF", the Tune operation is started again)

Self Tune operation is canceled. Then device continues to run with former PID parameters without changing PID parameters.

For Self Tune (Step Response Tuning) operation :
1 - Tune selection parameter tunn in "run List" menu must be selected **Self tune** Stun or **Auto-Self Tune** At.St
2 - For **Self Tune (Step Response Tuning)** operation, firstly power off and then apply power to the device.
3 - For being started Tune operation (Auto Tune or Self Tune) control form must be P, PI, PD or PID.
4 - If process set value is changed while Tune operation is being performed, Tune operation is canceled

Auto OPERATION FORM SELECTION

Auto — Automatic Operation (Close-Loop Control)
Device controls the process outputs by calculating the %output value automatically. (If there is a PID or ON/OFF output)

nAn — Manual Operation (Open-Loop Control)
In PID control formed systems, user can adjust %output value with increment and decrement buttons.
In ON/OFF control formed systems, user can adjust %output value oFF, HEAt or CooL with decrement and increment buttons.
If manual operation form is selected, %output value is shown on bottom display whatever bdSP parameter is selected.

rSSL RAMP / SOAK CONTROL

oFF — Ramp / Soak function is not active.

run — Ramp / Soak function is active

HoLd — Ramp / Soak function is paused.
Process set value becomes constant at last value and ramp or soak time does not take into consideration.

As explained in Section 8.1.4, when Soft-Start parameter StrA is active, Ramp / Soak control parameter rSSL has no effect.

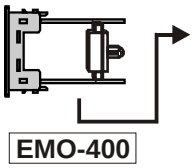

ULSL MOTORIZED VALVE CONTROL

It defines motorized valve control form. Module-1 output operates for opening the valve, Output-3 operates for closing the valve.
If Module-1 is relay output, motorized valve control parameter ULSL is shown even motorized valve control is not used. If motorized valve control is used, Module-2 output can not be used as PID.

no — Motorized valve control is not active.

HEAt — Motorized valve runs with heating PID

CooL — Motorized valve runs with cooling PID

Motorized valve control parameter ULSL must not be changed, if there is an electrical wiring.

Motorized valve control can be performed with ULSL parameter. For doing this operation, EMO-400 Relay output module must be plugged in Module-1 socket. Module-1 and Output-3 controls the position of the valve with motorized valve control.

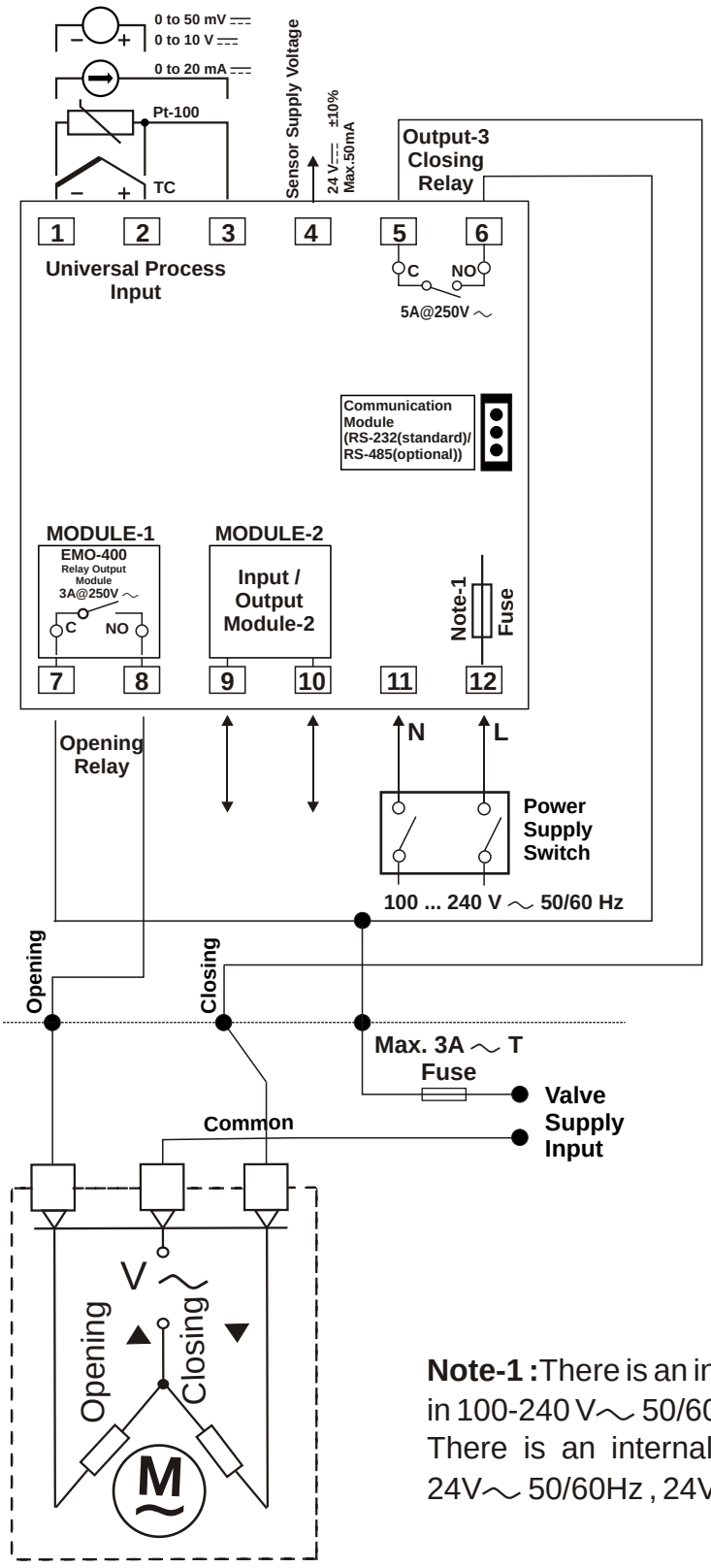

MOTORIZED VALVE

Motorized Valve Control
Electrical Wiring Diagram for
ESM-4450.1.20.1.1/01.00

RELEVANT PARAMETERS:
In PASS OPEr or PASS tECH (run LýSt) menu page ;

ULSL **Parameter** : It defines how to perform the motorized valve control with the device.
If motorized valve control is activated by selecting the ULSL parameter HEAt or CooL
In PASS tECH GEnn COnF menu page ULtt and ULHY parameters are shown.

ULtt **Parameter :** It can be adjusted from 5 to 600. The unit is "second".
It defines after how many seconds valve is completely opened. For determinig the parameter correctly, close the valve manually. Be sure that valve is closed completely, then open it manually without stopping and measure that how many seconds have passed for opening it completely. Parameter must be entered "measured value+5%of measured value" and as second.

ULHY **Parameter :**It can be adjusted from 0,1 to 5,0. Unit is %. It is % of Ultt parameter. Minimum movement steps of valve while opening or closing are determined as % ratio. If valve oscillates while controlling, INCREASE the parameter value!

Note-1 : There is an internal 33R fusible flameproof resistor in 100-240 V~ 50/60Hz
There is an internal 4R7 fusible flameproof resistor in 24V~ 50/60Hz , 24V⎓

bPLt BUMPLESS TRANSFER

no Process output value in manual control is not taken into consideration while passing from manual control to automatic control. New control output that is measured in automatic control is applied to process output.
Last %output value is taken output value of manual control and manual control continues while passing from automatic control to manual control.

YES While passing from manual control to automatic control, last process output value in manual control is accepted as first process output value in automatic control and automatic control continues to run.
Last % process output value in automatic control is accepted as process output value of manual control and manual control continues to run.

LtCC ALARM LATCH CANCELING

no Alarm latch canceling is not performed.

YES If there is an alarm output with latching and there is no alarm status, latching operation will be finished by the device. When it is finished, this parameter becomes no Automatically.

8.1.3 Function Selection for Top and Bottom Display

tdSP It defines the function of the top display. This parameter determines which value is shown in top display.

0000 Process value (PV) is shown in top display.

0001 Difference between process set value and process value (SV-PV) is shown in top display.

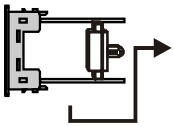

0002 If one of the analogue input modules is plugged in Module-1 or Module-2 socket, measured value from this module input is shown in top display.

EMI-410
EMI-430
EMI-440
EMI-450

bdSP It defines the function of the bottom display. This parameter determines which value is shown in bottom display.

0000 Process set value (SV) is shown in bottom display.

0001 %Output value that is applied to process control output is shown in bottom display.

0002 Status of the Ramp/Soak function is shown in bottom display.

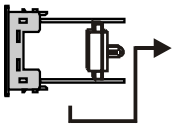

0003 If one of the analogue input modules is plugged in Module-1 or Module-2 socket, measured value from this module input is shown in top display.

EMI-410
EMI-430
EMI-440
EMI-450

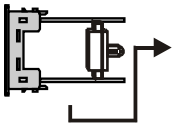

0004 If ∼CT input module (EMI-420) is plugged in Module-1 or Module-2 socket, measured value from this module input is shown in bottom display.

EMI-420

In 'Run List' menu Section 8.1.2, if operation form is **Auto**, then **bdSP** parameter is considered. If operation form is **mAn**, %output value is shown in bottom display whatever **bdSP** parameter is.

rnmP
SoA

8.1.4 Configuration of RAMP/SOAK Function and Step SET Values

StrA **Soft-Start** parameter.
When the power is applied to the device, process value reaches to the set value at the end of this time. It can be adjusted from 0 to 99 hours 59 minutes.
When the power is applied to the device, if this parameter is 0, StrA Ramp function is not active.

rSto Ramp / Soak Tolerance parameter. It can be adjusted from 0% to 50% of scale. In Ramp/Soak operation, if process value is out of the tolerance that is defined with this parameter, then time is stopped. To continue to count the Ramp/Soak time, process value must be between tolerances which are determined with this parameter.
If parameter is 0, this function is not active.

rSty Ramp/Soak program step selection parameter.
One program with 8 steps or two different programs with 4 steps can be defined.

0000 1.program 1-4 steps

0001 2.program 5-8 steps

0002 Steps between 1-8 is used as one program.

PU-1 Ramp/Soak step set value.
For ramp operation ; process value reaches to step set values that are defined with these parameters at the end of the time that are defined in ramp time parameters.
For soak operation ; process value is constant in step set value that are defined in these parameters for time that are defined in soak time parameters.
Ramp/Soak step set values can be adjusted from minimum value of set scale SU-L to maximum value of set scale SU-u

PU-8

tr-1 Ramp time for Ramp/Soak
Process value reaches to step set values at the end of the time that are defined in these parameters.
It can be adjusted 0 to 99 hours 59 minutes

tr-8

tS-1 Soak time for Ramp/Soak
Process value is constant in step set value for time that are defined in these parameters.
It can be adjusted 0 to 99 hours 59 minutes.

tS-8

RAMP ACTION DURING POWER ON (SOFT- START)
If [StrA] parameter is different from [0.0.0.0] and selection of operation form parameter is [Auto], Then Soft-Start starts to run. Ramp led blinks. By increasing the process output for [StrA] Parameter , process output reaches to the %output value that is measured when power first applied to the device at the end of the [StrA] time. When Soft-Start operation finishes, if operation form of the device is [Auto] , device continues to run from [PSEt] value.

If selection of operation form parameter is adjusted as [mAn]
If [StrA] time is adjusted to a value that is less than the counted value or [0.0.0.0]
If there is a sensor break failure
Then Soft-Start operation is canceled.

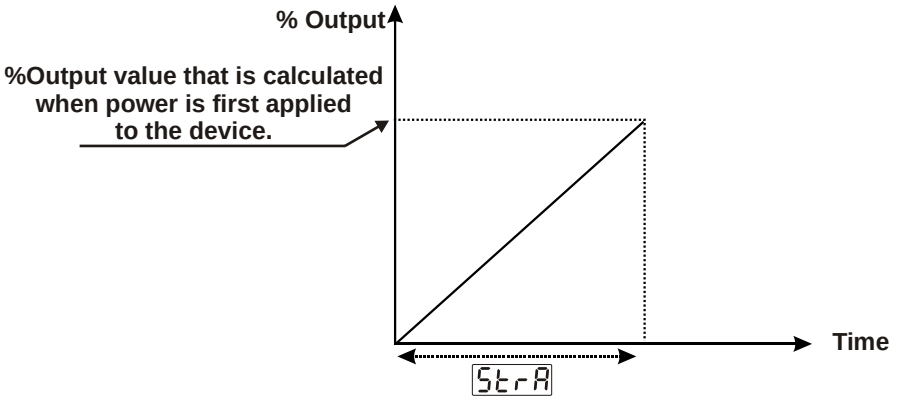

RAMP/SOAK IN NORMAL OPERATION :
Whatever operation form parameter is ; Normal Ramp/Soak operation is started by selecting [rSSL] parameter [run] . Ramp led becomes active. Ramp/Soak operation can be paused by selecting [rSSL] parameter [HoLd] . Ramp/Soak operation can be canceled by selecting [rSSL] Parameter [oFF].
While Ramp / Soak operation continues, if [rSty] parameter is [0000] 1-4 numbered, if it is [0001] 5-8 numbered, if it is [0002] , 1-8 numbered steps run.
When Ramp/Soak operation finishes, device operates in operation form which operation form device has before Ramp/Soak operation.([mAn] or [Auto])
If selection of operation form parameter before starting to Ramp/Soak operation is [Auto] then device continues to run from [PSEt] set value.

If any Ramp time or Soak time is [0.0.0.0], then relevant ramp or soak step is skipped.

Ramp/Soak operation is canceled
If there is a sensor break failure, while Ramp/Soak operation is running or if power off while Ramp/Soak operation is running.



While any Ramp/Soak function is running, changing relevant time set value can cause unexpected effects in set value and process output.



If Ramp / Soak tolerance parameter [rSto] is [0000] , then it has no function. When it is different from 0 (While Ramp/Soak is running) **;**
If (Calculated SET - [rSto] **)<** Process Value **<(Calculated SET +** [rSto] **)** condition is not true (process value is out of the tolerance), time counting is stopped till the condition is true.

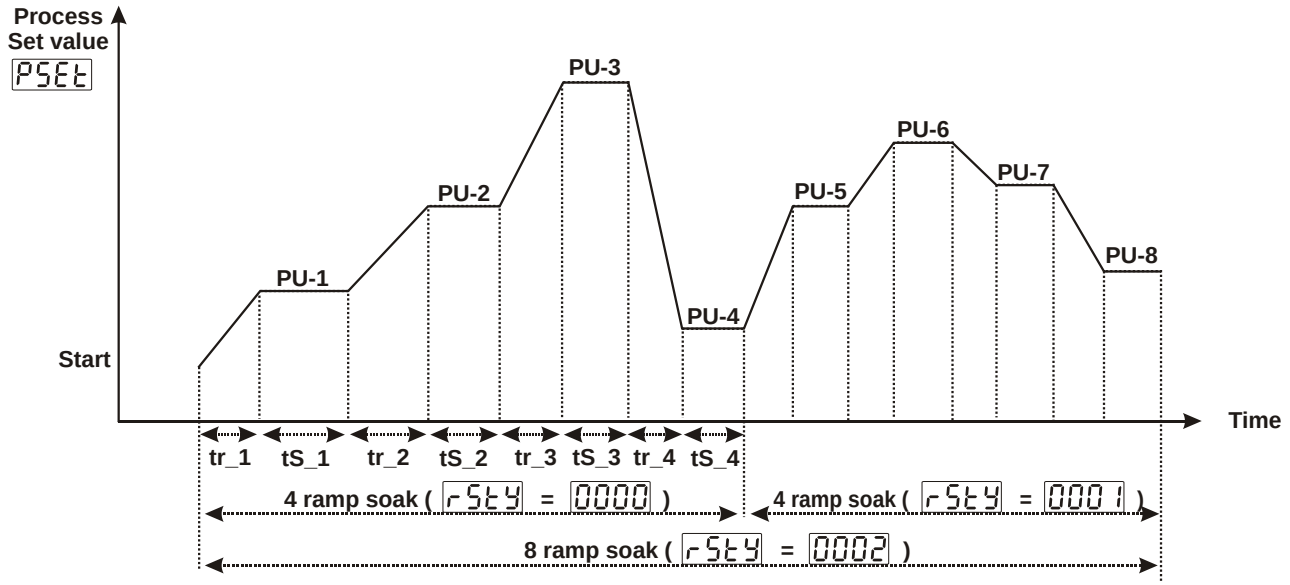

Example : If Ramp / Soak step set , ramp time and soak time parameters

PU-1 = 0500 , tr-1 = 0050 , tS-1 = 0140 ;

PU-2 = 0700 , tr-2 = 0000 , tS-2 = 0000 ;

PU-3 = 0900 , tr-3 = 0000 , tS-3 = 0000 ;

PU-4 = 1000 , tr-4 = 0100 , tS-4 = 0100 ; **are adjusted as on the left**

Device operates as shown below:

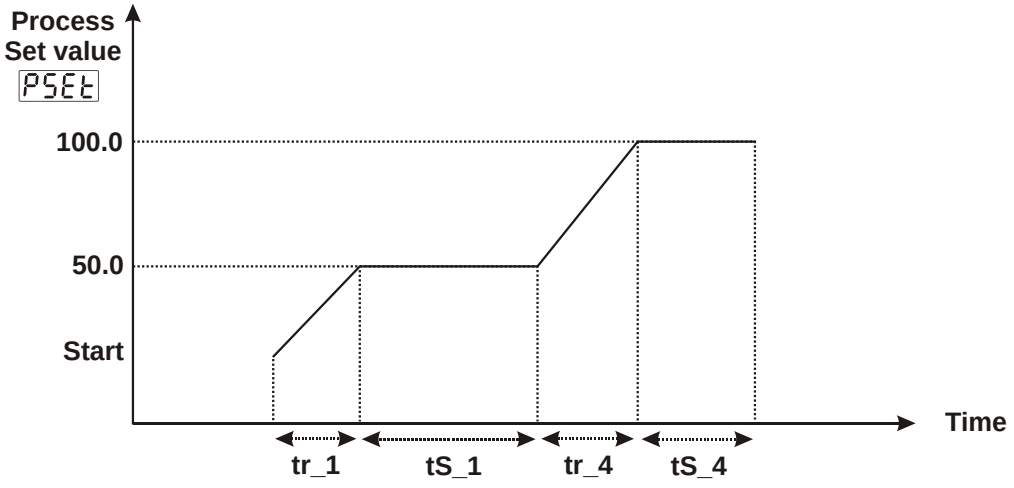

PinP
ConF

8.2.1 Process Input Type and Relevant Parameters with Process Input

iSSL Defines the process input type.

0000 TC input type selection

0001 RTD input type selection

0002 ⎓ Voltage/Current input type selection.

iSSL 0000 → tCSL Defines type and scale of the thermocouple for TC input. It is active if TC input type is selected.

0000 L (-100°C;850°C) or (-148°F;1562°F)

0001 L (-100.0°C;850.0°C) or (-148.0°F;999.9°F)

0002 J (-200°C;900°C) or (-328°F;1652°F)

0003 J (-199.9°C;900.0°C) or (-199.9°F;999.9°F)

0004 K (-200°C;1300°C) or (-328°F;2372°F)

0005 K (-199.9°C;999.9°C) or (-199.9°F;999.9°F)

0006 R (0°C;1700°C) or (32°F;3092°F)

0007 R (0.0°C;999.9°C) or (32.0°F;999.9°F)

0008 S (0°C;1700°C) or (32°F;3092°F)

0009 S (0.0°C;999.9°C) or (32.0°F;999.9°F)

0010 T (-200°C;400°C) or (-328°F;752°F)

0011 T (-199.9°C;400.0°C) or (-199.9°F;752.0°F)

0012 B (44°C;1800°C) or (111°F;3272°F)

0013 B (44.0°C;999.9°C) or (111.0°F ; 999.9°F)

0014 E (-150°C;700°C) or (-238°F;1292°F)

0015 E (-150.0°C;700.0°C) or (-199.9°F;999.9°F)

0016 N (-200°C;1300°C) or (-328°F;2372°F)

0017 N (-199.9°C;999.9°C) or (-199.9°F;999.9°F)

0018 C (0°C;2300°C) or (32°F;3261°F)

0019 C (0.0°C;999.9°C) or (32.0°F;999.9°F)

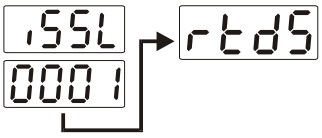

Defines type and scale of sensor for RTD input. It is active if RTD input is selected.

0000 Sensor type : PT-100
Scale: -200°C to 650°C (If unit is °C)
Scale: -328°F to 1202°F (If unit is °F)

0001 Sensor type : PT-100
Scale: -199.9°C to 650.0°C (If unit is °C)
Scale: -199.9°F ile 999.9°F (If unit is °F)

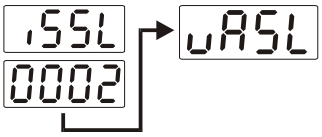

Defines input range and scale of ⎓Voltage/current input.It is active if ⎓Voltage / Current is selected.

0000 0...50mV⎓ (-1999 ; 9999)

0001 0...5V⎓ (-1999 ; 9999)

0002 0...10V⎓(-1999 ; 9999)

0003 0...20mA⎓ (-1999 ; 9999)

0004 4...20mA⎓ (-1999 ; 9999)

dPnt

Defines point position for displays. It is active if ⎓Voltage/Current input is selected.

0000 No point

0001 000.0

0002 00.00

0003 0.000

uCAL

It is active when ⎓Voltage/Current input is selected. It determines calibration type.

0000 Fixed dual point calibration is done. It does not allow to adjust minimum and maximum value of calibration points. It can be adjusted from -1999 to 9999.

0001 It allows to do selectable dual point calibration.

0002 It allows to define 16 calibration points.

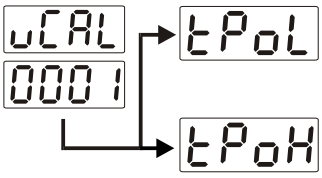

tPoL It defines minimum value for selectable dual point calibration. It is active if ⎓Voltage/Current input is selected. It can be adjusted from -1999 to 9999.

tPoH It defines maximum value for selectable dual point calibration. It is active if ⎓Voltage/Current is selected. It can be adjusted from -1999 to 9999.

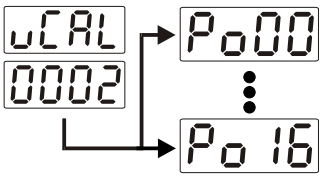

In multi point calibration, calibration points are defined with these parameters.
It is active if ⎓Voltage /Current is selected. It can be adjusted from -1999 to 9999.
In multi point calibration operation, defined scale is divided into 16 calibration points.

For example : uASL is 0000 (0-50 mV⎓) .

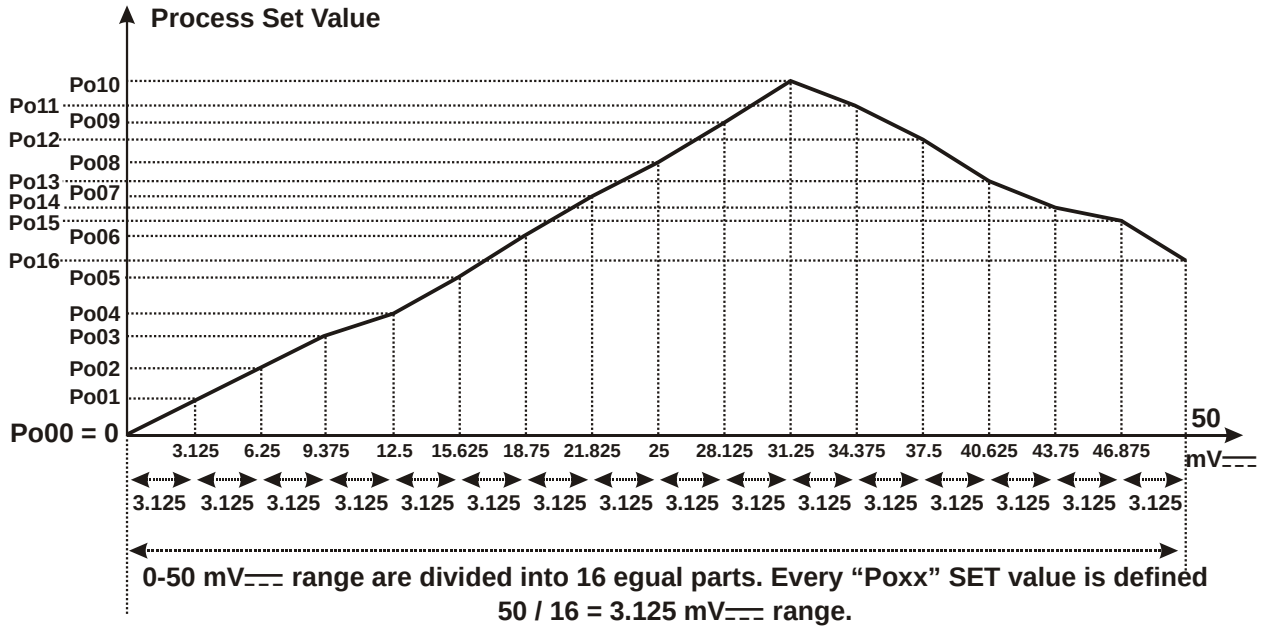

0-50 mV⎓ range are divided into 16 egual parts. Every "Poxx" SET value is defined 50 / 16 = 3.125 mV⎓ range.

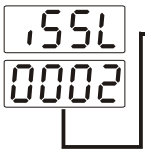

CoEF Coefficient value for ⎓Voltage / Current input. Process value is multiplied with this value.
It is active if ⎓Voltage / Current input is selected. It can be adjusted from 1.000 to 9.999.

unit Unit selection

°C Unit is °C

°F Unit is °F



U Unit is U. It is active if ⎓Voltage / Current input is selected

- No unit. It is active if ⎓Voltage / Current input is selected

LPAd Process Value Low Point Adjustment parameter for TC and RTD input scales. It can be adjusted -50% to +50% of scale.

uPAd Process Value Up Point Adjustment parameter for TC and RTD input scales.It can be adjusted -50% to +50% of scale.

LoL Minimum value of operating scale. It can be changed according to input type and scale of the process.

uPL Maximum value of operating scale. It can be changed according to input type and scale of the process.

PUoF Display offset for process value. It can be adjusted -10% to +10% of scale. The defined value is added to process value.

iFLt Defines filter time for input signal. It can be adjusted from 0.0 to 900.0.



CJnC It is active if process input is selected TC input. It decides if cold junction compensation is active or not.

YES Cold junction compensation is active.

no Cold junction compensation is not active.

PID
CONF

8.2.2 PID Configuration Parameters

If any output is configured as heating PID ;
P-Ht , i-Ht , d-Ht , Ct-H , oLLH , ouLH , oLtH , Ar , SUoF , PoFS , PoSS , Strn , o-db , Sbou parameters are visible.

If any output is configured as cooling PID ;
CCoE , P-Ct , i-Ct , d-Ct , Ct-C , oLLC , ouLC , oLtC , Ar , SUoF , PoFS , PoSS , Strn , o-db , Sbou parameters are visible.

If no output is configured as PID ;
Only o-db , Sbou parameters are visible in PID CONF menu.

IF
io P1
OR
io P2
OR
out3
CONF
↓
out1
OR
out2
OR
out3
HEAt
↓
Con1
OR
Con2
OR
Con3
↓
PID
IS SELECTED

P-Ht HEATING PROPORTIONAL BAND (000.0% , 999.9%)
Full Scale (uPL - LoL) %.
If uPL = 1000 °C, LoL = 0 °C and P-Ht = 50.0 then
Proportional Band = (uPL - LoL) * P-Ht / 100.0
Proportional Band = (1000-0)*50.0/100.0 = 500 °C

i-Ht HEATING INTEGRAL TIME (0000 sec, 3600 secs)
It can be changed by the user. When Tune operation stops, it can be changed by the device. If it is 0, integral control part does not run. When tune operation stops if this parameter is 0, this parameter can not be changed because of integral control part does not run.

d-Ht HEATING DERIVATIVE TIME (000.0 sec, 999.9 secs)
It can be changed by the user. When Tune operation stops, it can be changed by the device. If it is 0, derivative control part does not run. When tune operation stops if this parameter is 0, this parameter can not be changed because of derivative control part does not run.

Ct-H CONTROL PERIOD FOR HEATING OUTPUT (1 sec, 150 secs)
It is control period for heating. While motorized valve control runs, if ULSL is heat or cool, this parameter is not visible.

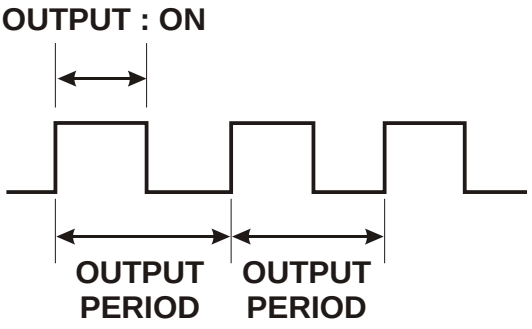

Relay Output : Output period must be short for stable process control. Relay must not be used in short output periods because of limited life of their relay contact (number of open/close events). Relay output must be used as control output in values near to 30 seconds or greater than this value.
SSR Output : If short output period is needed in a system (approximately 1-2 seconds) SSR driver output module as last control element is recommended.

IF
oP1
OR
oP2
OR
out3
ConF
↓
out1
OR
out2
OR
out3
HEAt
↓
Con1
OR
Con2
OR
Con3
↓
Pid
IS SELECTED

oLLH HEATING MINIMUM CONTROL OUTPUT (0.0% , ouLH)

It is % of heating minimum output. If heating and cooling PID control functions operate together, this parameter is not considered.
Even as a result of the heating PID calculation device calculates the % output value less than this parameter, heating output is active minimum for OLLH parameter.

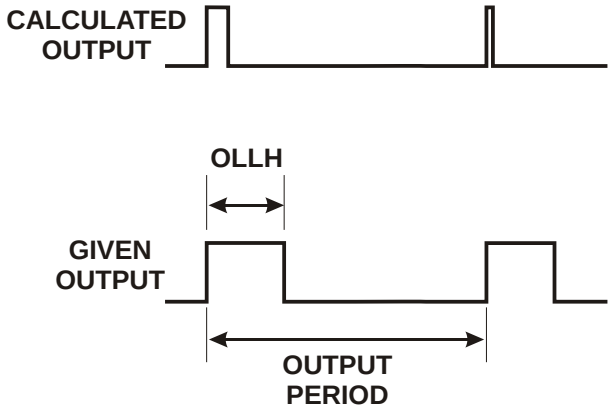

ouLH HEATING MAXIMUM CONTROL OUTPUT (oLLH , 100.0%)

It is % of heating maximum output.
Even as a result of the heating PID calculation device calculates the % output value greater than this parameter, heating output is active maximum for OULH parameter.

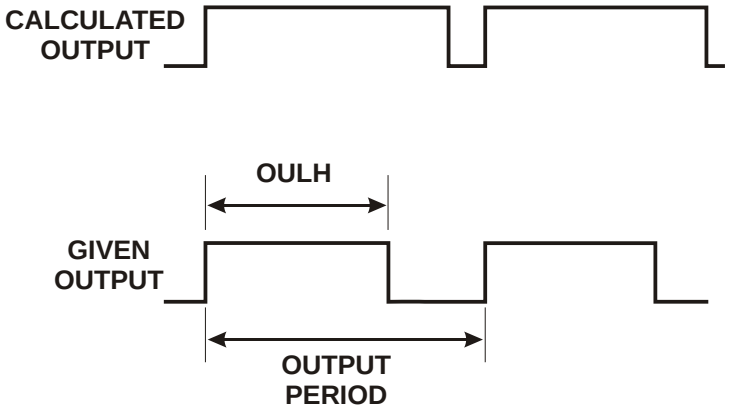

oLtH HEATING MINIMUM CONTROL OUTPUT TIME (0.0 sec , Ct-H)

Heating output can not be active less than this parameter. Even if this parameter is 0, this parameter is accepted 50 msecs for security. While motorized valve control is running if ULSL parameter is selected heating or cooling, this parameter is not accessible.

IF
ioP1
OR
ioP2
OR
out3
ConF
out1
OR
out2
OR
out3
CooL
Con1
OR
Con2
OR
Con3
Pid
IS SELECTED

CCoE COOLING PROPORTIONAL BAND COEFFICIENT (0.0 , 100.0)

If heating and cooling PID is used in a system, tune operation is performed by heating output. Cooling proportional parameter P-Ct is calculated with heating proportional band value P-Ht and coefficient CCoE .

P-Ct = P-Ht * CCoE / 100.0

Example : If heating and cooling PID is used in a system at the end of the tune operation,

If P-Ht = 10.0% and CCoE = 50.0 then

P-Ct = P-Ht * CCoE / 100.0 = 10.0 * 50.0 / 100.0 = 5.0%

Note: It is recommended that cooling proportional band coefficient if cooling is done with air 100.0, with oil 80.0, with water 40.0 is accepted.

P-CL COOLING PROPORTIONAL BAND (000.0% , 999.9%)

Full Scale (uPL - LoL) %

If uPL = 1000 °C, LoL = 0 °C and P-Ct = 50.0 then

Proportional Band = (uPL - LoL) * P-Ct / 100.0

Proportional Band = (1000-0)*50.0/100.0 = 500 °C

i-CL COOLING INTEGRAL TIME (0000 sec, 3600 secs)

It can be changed by the user. When tune operation finishes, it can be changed by the device. If it is 0, integral control part does not perform. When tune operation finishes if this parameter is 0, it can not be changed because integral control part does not perform.

d-CL COOLING DERIVATIVE TIME (000.0 sec, 999.9 secs)

It can be changed by the user. When tune operation finishes, it can be changed by the device. If it is 0, derivative control part does not perform. When tune operation finishes if this parameter is 0, it can not be changed because derivative control part does not perform.

Ct-C COOLING OUTPUT PERIOD TIME (1 sec, 150 secs)

It is control period of cooling output. While motorized valve control is running, if ULSL is selected heating or cooling, this parameter is not visible.

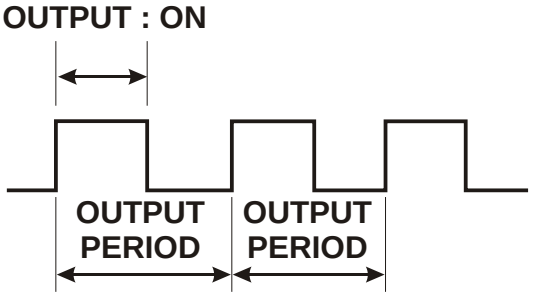

Relay Output : Output period must be short for stable process control. Relay must not be used in short output periods because of limited life of their relay contact (number of open/close events). Relay output must be used as control output in values near to 30 seconds or greater than this value.

SSR Output : If short output period is needed in a system (approximately 1-2 seconds) SSR driver output module as last control element is recommended.

IF
ioP1
OR
ioP2
OR
out3
ConF
out1
OR
out2
OR
out3
CooL
Con1
OR
Con2
OR
Con3
Pid
IS SELECTED

oLLC **COOLING MINIMUM CONTROL OUTPUT (0.0% , ouLC)**

It is % of cooling minimum output. If heating and cooling PID control functions operate together, this parameter is not considered.
Even as a result of the cooling PID calculation device calculates the output value less than this parameter, cooling output is active minimum for OLLC parameter.

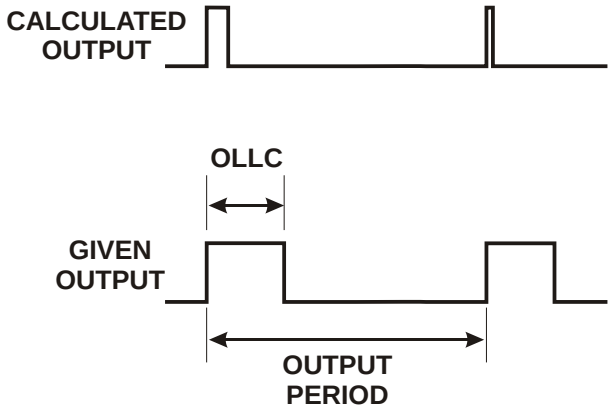

ouLC **COOLING MAXIMUM CONTROL OUTPUT (oLLC , 100.0%)**

It is % of cooling maximum output.
Even as a result of the cooling PID calculation device calculates the output value greater than this parameter, cooling output is active maximum for OULC parameter.

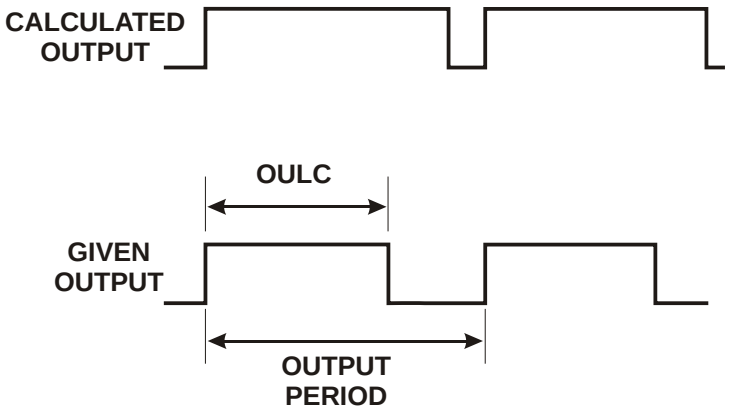

oLtC **COOLING MINIMUM CONTROL OUTPUT TIME (0.0 sec , Ct-C)**

Cooling output can not be active less than this parameter. Even if this parameter is 0, this parameter is accepted 50 msecs for security. While motorized valve control is running if ULSL parameter is selected heating or cooling, this parameter is not accessible.

IF

ioP1

OR

ioP2

OR

out3

ConF

out1

OR

out2

OR

out3

HEAt

OR

CooL

Con1

OR

Con2

OR

Con3

Pid

IS SELECTED

Ar

ANTI-RESET WINDUP (otAr , 0-SCALE HIGH POINT)

If Ar Parameter is entered from 0 to Scale High Point , this value is used for Anti-Reset Windup.

If Ar Parameter is selected otAr , heating proportional band is used for heating PID process instead of Ar Parameter and cooling proportional band is used for cooling PID process instead of Ar Parameter.

While PID operation is running if

PSEt - Ar <= process value <= PSEt + Ar condition is true, integral value is calculated. If the condition is not true , integral value is not calculated and last calculated integral value is used.

Scale High Point : Maximum process input value in Pt-100 and Tc inputs , 9999 for fixed dual point calibration used inputs , Scale high point is the biggest one from tPoL or tPoH for selectable dual point calibration used inputs , Scale high point is the biggest one from Po00 or Po16 for multi point calibration used inputs.

Note: Point position changes according to process input type and scale , Unit changes according to the selection in this unit parameter.

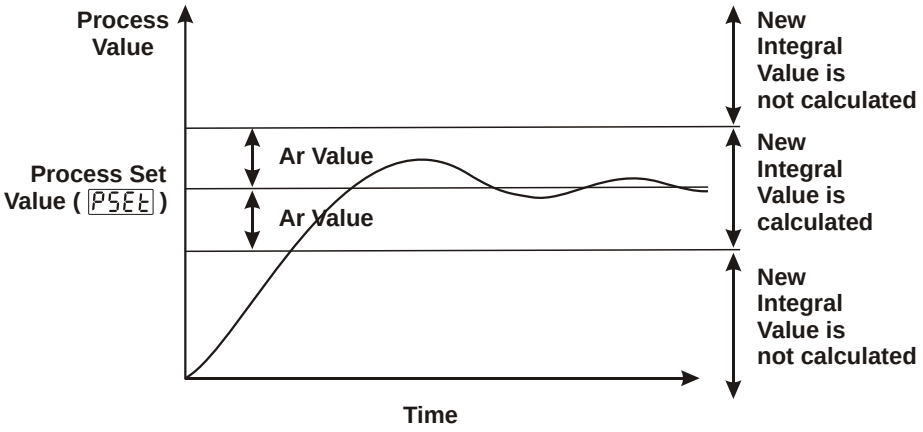

SUoF

SET VALUE OFFSET

((- SCALE HIGH POINT / 2) , (SCALE HIGH POINT / 2))

PSEt + SUoF is used as set value in PID calculations. It is used for shifting the proportional band.

Example: If PSEt = 500°C , SUoF = 5°C or SUoF = -5°C , shifting of the proportional band is shown below :

Note: Point position changes according to process input type and scale , Unit changes according to the selection in this unit parameter.

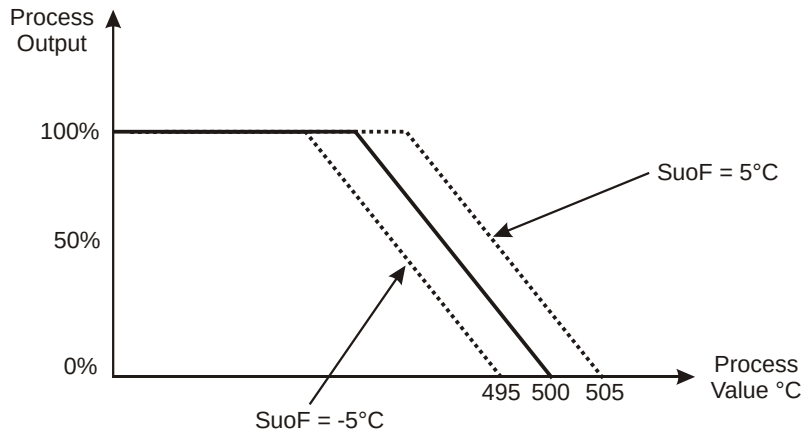

IF
ioP1
OR
ioP2
OR
out3
ConF
↓
out1
OR
out2
OR
out3
↓
HEAt
OR
CooL
↓
Con1
OR
Con2
OR
Con3
↓
Pid
IS SELECTED

PoFS

PID OUTPUT OFFSET

(FOR HEATING PID 0.0%, 100.0%)
(FOR COOLING PID -100.0%, 0.0%)
(FOR HEATING-COOLING PID -100.0%, 100.0%)

This parameter is added to “Output %” which is calculated at the end of the PID.

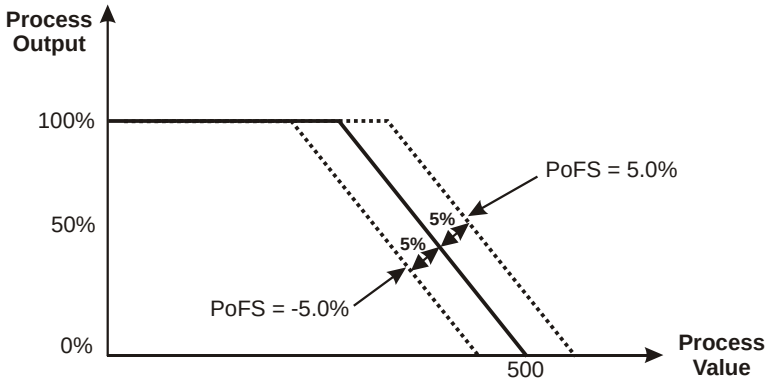

PoSS

OUTPUT OFFSET RELATED TO PID SET

(FOR HEATING PID 0.0%, 100.0%)
(FOR COOLING PID -100.0%, 0.0%)
(FOR HEATING-COOLING PID -100.0%, 100.0%)

This parameter is added to the %process output that is calculated at the end of the PID according to process set value.
PoSS * PSEt / (uPL - LoL)

Example: If PSEt = 500°C , uPL = 1000°C, LoL = 0 , PoSS = 5.0% then PoSS * PSEt / (uPL - LoL) = 5.0 * 500 /(1000-0) = 2.5%
2.5% is added to calculated process value.

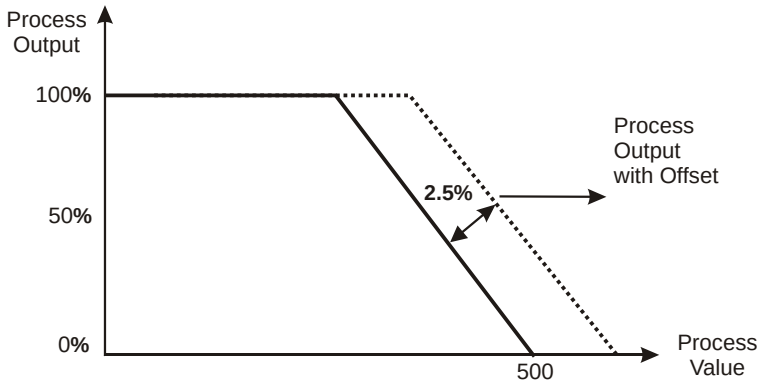

IF

ioP1

OR

ioP2

OR

out3

Conf

out1

OR

out2

OR

out3

HEAt

OR

CooL

Con1

OR

Con2

OR

Con3

Pid

IS SELECTED

Strn

PROCESS VALUE STABILIZATION (1, SCALE HIGH POINT)

It is used to control if process value oscillates or not when tunn Parameter is Atun or At.St

If;

PSEt - Strn **<= Process Value <=** PSEt + Strn condition is not true and process value starts to oscillate (as shown in the diagram). If tunn parameter is Atun or At.St ,then Atin parameter is selected YES and thenLimit Cycle Tune operation starts for determinig new PID parameters.

Scale High Point : Maximum process input value in Pt-100 and Tc inputs

9999 for fixed dual point calibration used inputs,

Scale high point is the biggest one from tPoL or tPoH for selectable dual point calibration used inputs

Scale high point is the biggest one from Po00 or Po 16 for multi point calibration used inputs

Note: Point position changes according to process input type and scale,

Unit changes according to the selection in this unit parameter.

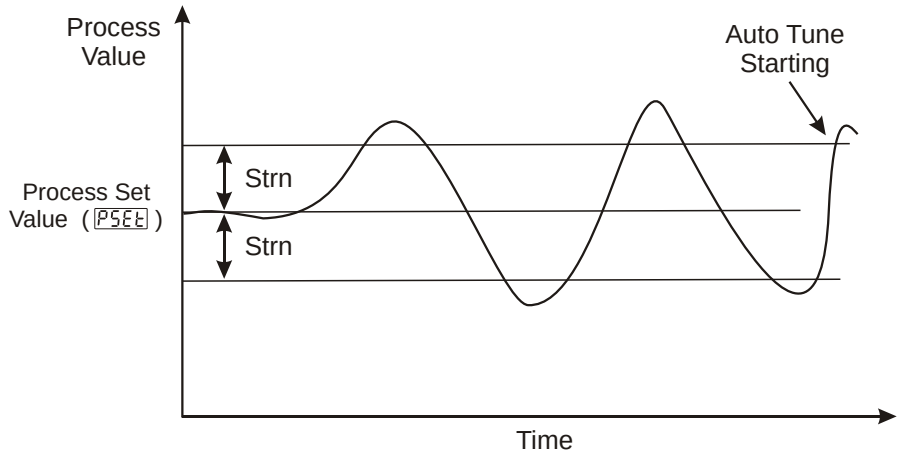

o-db

PROPORTIONAL BAND SHIFTING ((- SCALE HIGH POINT / 2) , (SCALE LOW POINT / 2))

If heating-cooling or only cooling function is performed ;

Cooling process set value is calculated by adding set value PSEt with parameter o-db

Control form can be ON/OFF or PID.

If set value for heating = PSEt + SUoF ;

Then set value for cooling = PSEt + SUoF + o-db

Scale High Point : Maximum process input value in Pt-100 and Tc inputs

9999 for fixed dual point calibration used inputs,

Scale high point is the biggest one from tPoL or tPoH for selectable dual point calibration used inputs

Scale high point is the biggest one from Po00 or Po 16 for multi point calibration used inputs

Note: Point position changes according to process input type and scale ,

Unit changes according to the selection in this unit parameter.

If o-db > 0 (Dead Band)

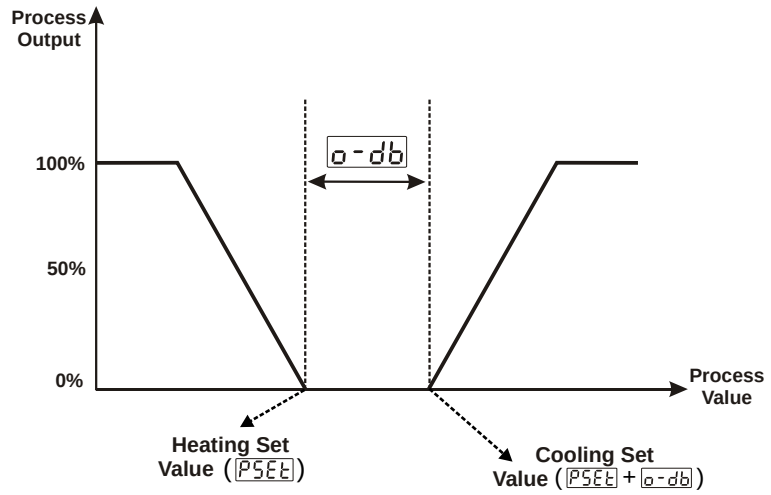

If o-db < 0 (Overlap Band)

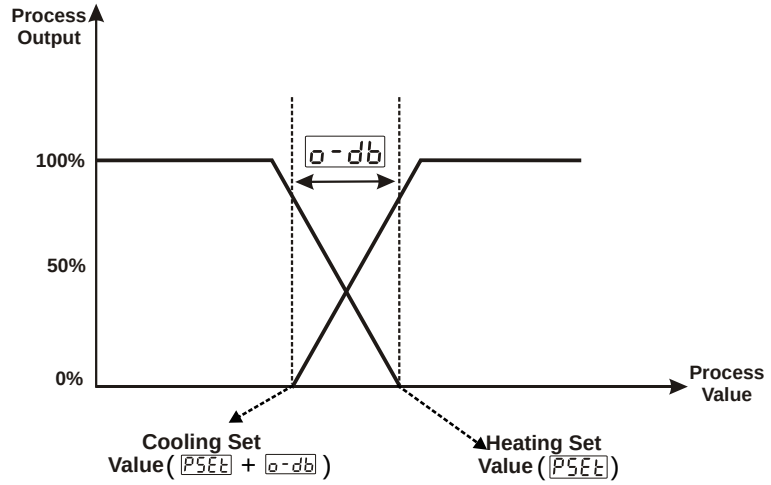

Sbou

SENSOR BREAK OUTPUT VALUE
(FOR HEATING PID 0.0%, 100.0%)
(FOR COOLING PID -100.0%, 0.0%)
(FOR HEATING-COOLING PID -100.0%, 100.0%)

When sensor breaks, controlling of the process can continue by entering %output value to Sbou parameter.
If this parameter 0.0 , process control output does not perform an output when sensor breaks.

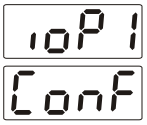

8.2.3 MODULE-1 Configuration Parameters

Module-1 configuration parameters are arranged automatically by the device according to the module type in Module-1 socket. These parameters are not accessible if there is no module in Module-1 socket.

EMO-400, EMO-410, EMO-420

- out 1 — Defines output function.
- Con 1 — Defines control algorithm of output module.
- HYS 1 — Hysteresis value of output module
- HYn 1 — Defines operation form of hysteresis
- tn 1 — In ON/OFF operation, this time must be passed for the output to be energised again.
- Lou 1 — Defines logic output function
- ALS 1 — Selection of measurement input for alarm output. (There must be one of analogue input modules in Module-2 socket.)
- ALt 1 — Defines alarm type
- ALH 1 — Alarm hysteresis value
- Aon 1 — Alarm on delay time
- AoF 1 — Alarm off delay time

EMO-430

- oAt 1 — Configuration of analogue output module
- ouA 1 — Function selection of analogue output
- rEt 1 — It determines "*re-transmission"* function for analogue output module

EMI-400

- L in 1 — Configuration of logic input

EMI-410, EMI-430, EMI-440 , EMI-450

- iSL 1 — Configuration of analogue input module
- tSL 1 — Selection of sensor type and scale for TC input module
- rtS 1 — Selection of sensor type and scale for PT-100 input module
- uAS 1 — It determines input type for ⎓Voltage / Current input module
- dPn 1 — It determines point position for display.
- iCA 1 — It determines calibration type.
- iCL 1 — It defines minimum value for selectable dual point calibration.

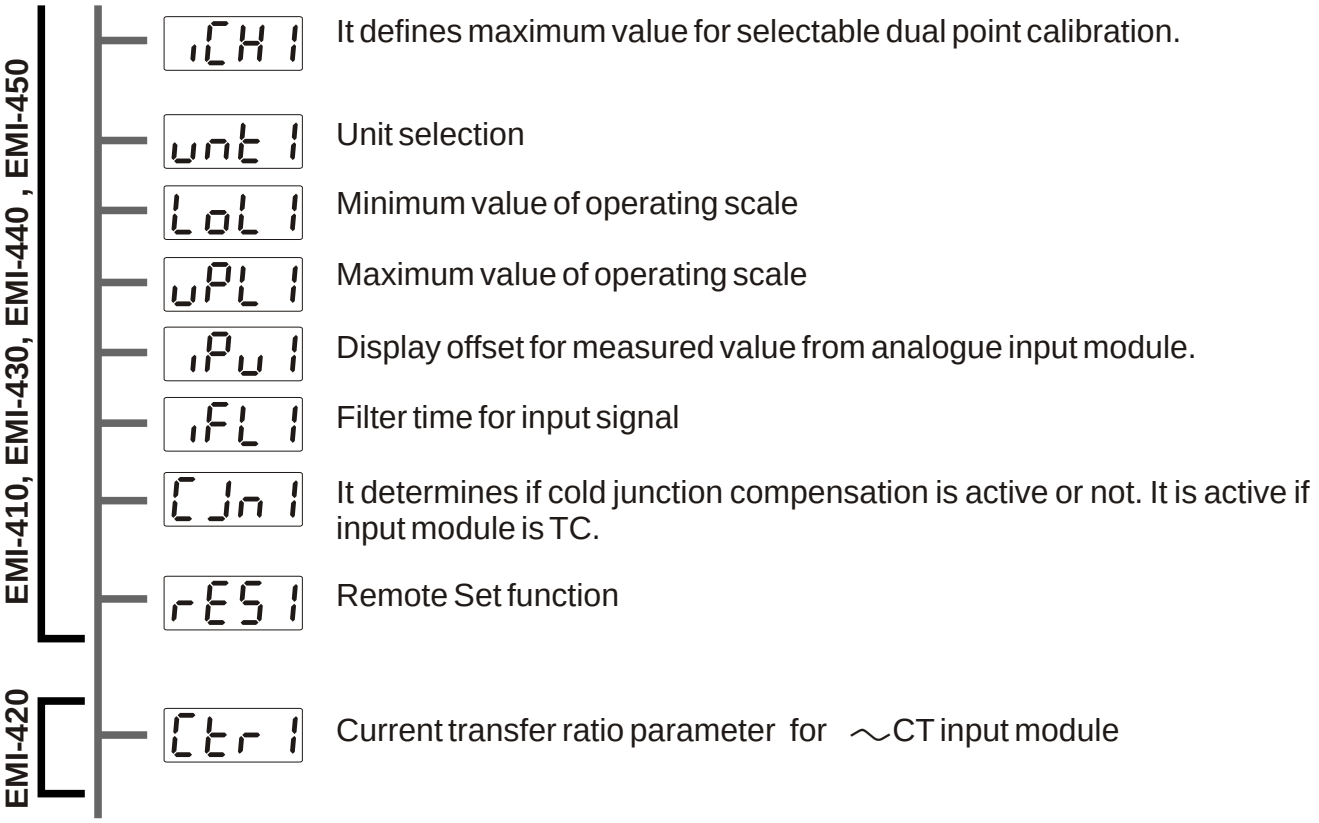
EMI-410, EMI-430, EMI-440 , EMI-450
EMI-420
iCH1
It defines maximum value for selectable dual point calibration.
unt1
Unit selection
LoL1
Minimum value of operating scale
uPL1
Maximum value of operating scale
iPu1
Display offset for measured value from analogue input module.
iFL1
Filter time for input signal
CJn1
It determines if cold junction compensation is active or not. It is active if input module is TC.
rES1
Remote Set function
CtR1
Current transfer ratio parameter for ∼CT input module

Module-1 configuration parameters are defined according to which input / output modules are plugged in Module-1 socket.

iOP1 ConF

These parameters are active if EMO-400 (Relay Output) , EMO-410 (SSR Driver) or EMO-420 (Digital Output) module is plugged in Module-1 socket.

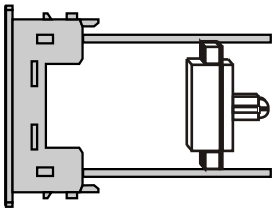

EMO - 400
EMO - 410
EMO - 420

iOP1
ConF

out1 Defines output function for Module-1

- **HEAt** Heating
- **CooL** Cooling
- **Lout** Logic output

out1 / HEAt / OR / CooL → **Con1** Defines control algorithm of output module in Module-1 socket. It is active if output function of Module-1 is heating or cooling.

- **on.oF** ON/OFF control algorithm
- **PId** PID control algorithm

Con1 / on.oF →

- **HYS1** Hysteresis value for OUT-1. It can be adjusted from 0% to 50% of defined scale. (It is active if ON/OFF control is selected)
- **HYn1** It determines operation form of hysteresis. (It is active if ON/OFF control is selected)
  - **0000** SV + HYS/2 and SV - HYS/2
  - **0001** SV and SV+HYS or SV and SV-HYS
- **tn71** In ON/OFF operation, this time must be passed for the output to be energised again. It can be adjusted from 0.0 to 100.0 seconds. (It is active if ON/OFF control is selected)

out1 → Lou1
Lout

It determines logic output function of output module in Module-1 socket. It is active if output function of Module-1 is Lout (Logic Output)

0000 Alarm output

0001 Manual / Automatic data output

0002 Sensor break alarm output

0003 Output is active when the process value is out of the band which is defined with minimum value of operating scale LoL and maximum value of operating scale uPL

0004 Output indicates that Ramp/Soak function has finished

MODULE-2

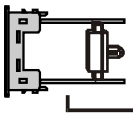

EMI-410
EMI-430
EMI-440
EMI-450

0005 Sensor break alarm output for analogue input module in Module-2 socket. (It is visible if one of analogue input modules is plugged in Module-2 socket)

0006 If process value is less than minimum value of operating scale LoL2 for analogue input module in Module-2 socket or greater than maximum value of operating scale uPL2 for analogue input module in Module-2 socket, process output becomes active.(This parameter is visible if one of the analogue input modules is plugged in Module-2 socket)

Lou1 → AL51
0000

Measurement input selection for Module-1 alarm output. This parameter is visible if Logic output function of Module-1 is Alarm output and one of the analogue input modules is plugged in Module-2 socket

MODULE-2

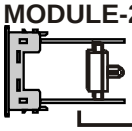

EMI-410
EMI-430
EMI-440
EMI-450

0000 Alarm output runs according to the process input.

0001 Alarm output runs according to the analogue input module (2nd sensor input) in Module-2 socket.

Lou1 → ALt1
0000

It determines alarm type. It is active if logic output function of Module-1 is an alarm output.

0000 Process high alarm

0001 Process low alarm

AL51
0000

If there is no analogue input module in Module-2 socket

0002 Deviation high alarm. It is active when alarm output runs according to the process input.

0003 Deviation low alarm. It is active when alarm output runs according to the process input.

0004 Deviation band alarm. It is active when alarm output runs according to the process input.

0005 Deviation range alarm. It is active when alarm output runs according to the process input.

MODULE-2

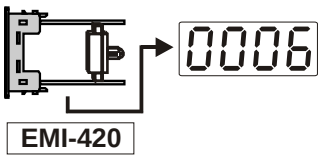

Heater failure alarm. It is active if ∼CT input module is plugged in Module-2 socket.

Process high alarm

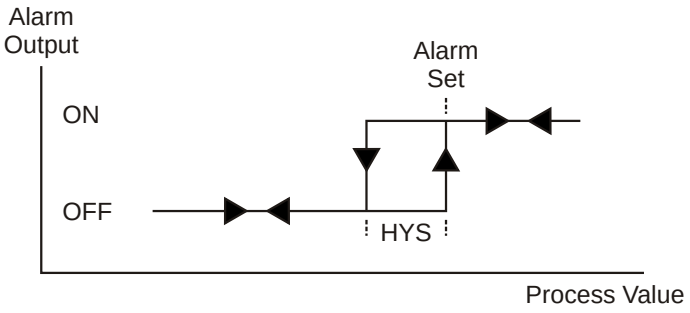

Process low alarm

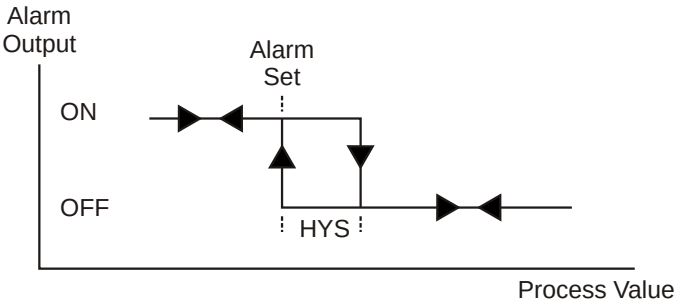

Deviation High Alarm

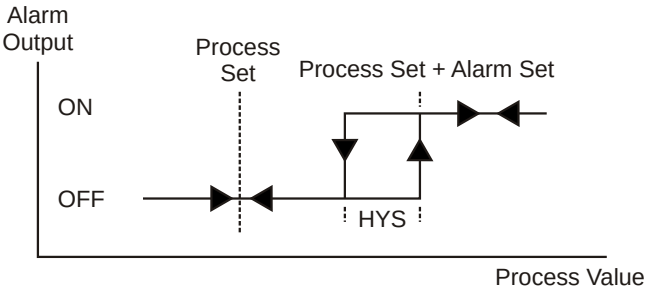

Deviation Low Alarm

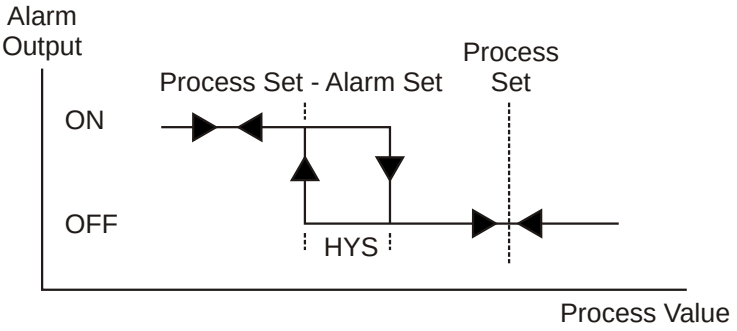

Deviation Band Alarm

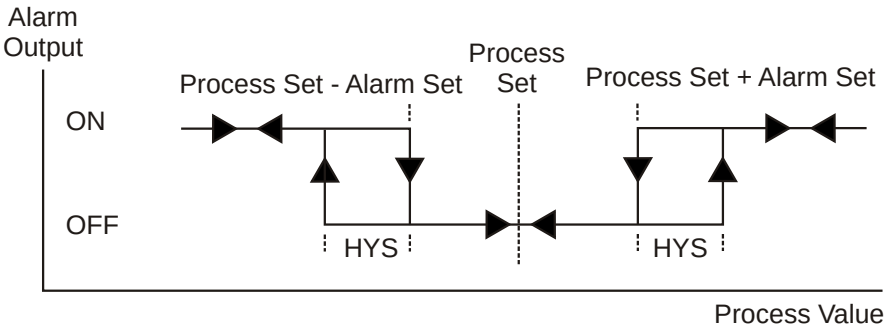

Deviation Range Alarm

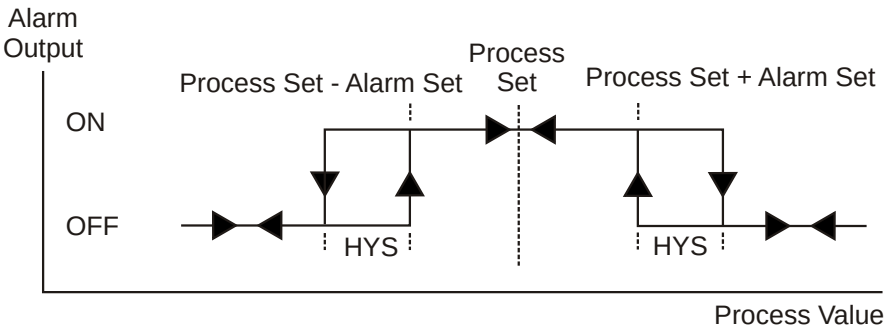

Lou1 / 0000 → ALH1

Alarm- 1 hysteresis value. It is active if logic output function of Module-1 is an alarm output.

If AL51 is 0000 or there is no analogue input module (2nd sensor input) in Module-2 socket, then it can be adjusted from 0% to 50% of process input scale (uPL - LoL)

If AL51 is 0001 and there is one of an analogue input module (2nd sensor input) in Module-2 socket, then it can be adjusted from 0% to 50% of analogue input module scale (uPL2 - LoL2)

If there is ∿CT input module (EMI-420) in Module-2 socket and alarm type parameter ALt1 is 0006 , then it can be adjusted from 0.0 to 20.0A∿

→ Aon1

Alarm on delay time. It can be adjusted from 0000 to 9999 seconds. It is active if logic output function of Module-1 is alarm output.

→ AoF1

Alarm off delay time. It can be adjusted from 0000 to 9998 seconds. When the value is greater than 9998, LtCH is seen on the display. It means alarm latching output is selected. It is active if logic output function of Module-1 is alarm output.

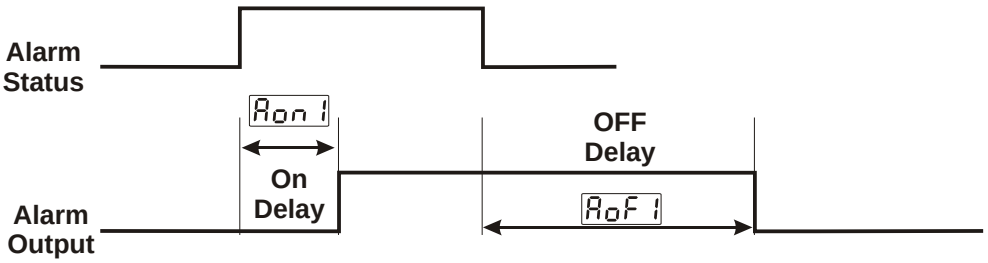

These parameters are active if EMO-430 (0/4...20 mA⎓Current Output) module is plugged in Module-1 socket.

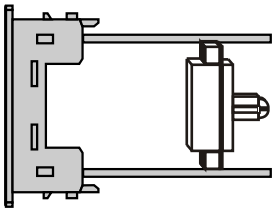

EMO-430

ioP1
ConF

oAt1 Configuration of analogue output module in Module-1 socket.

- **0000** 0...20mA output or 0...10V⎓ according to Section 5.2.5 is selected.
- **0001** 4...20mA output or 2...10V⎓ according to Section 5.2.5 is selected.

ouA1 Function selection of analogue output module in Module-1 socket.

- **HEAt** Analogue output module in Module-1 socket is used for heating
- **CooL** Analogue output module in Module-1 socket is used for cooling.
- **rEtr** Analogue output module in Module-1 socket is used for retransmission.

ouA1 → **rEt1** Defines "*Re-transmission*" function. (It is active if "*re-transmission*" function is selected for analogue output module in Module-1 socket.

rEtr

- **rt.Pr** It retransmits Process value to analogue output.
- **rt.Er** It retransmits difference between Process and Set value to analogue output.
- **rt.PU** It retransmits Set value to analogue output.

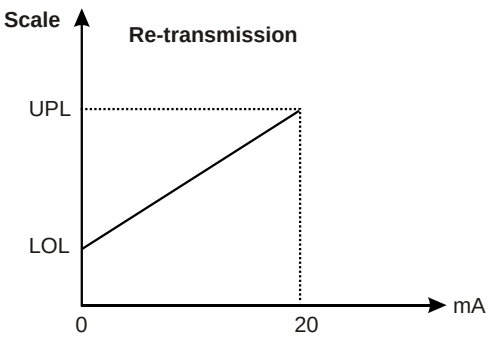

These parameters are active if EMI-400 (Digital Input) module is plugged in Module-1 socket.

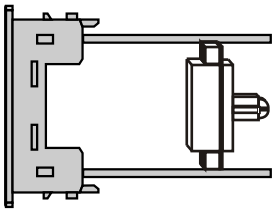

EMI-400

ioP1
ConF

L in1 Configuration of digital input in Module-1 socket.

0000 Manual / Automatic selection input

When the logic input is triggered ;

In PID Tune and selection of operation form menu (run List) , if selection of operation form parameter (Auto) is mAn , then Auto is selected, if Auto parameter is Auto , then mAn is selected.

0001 **Auto Tune (Limit Cycle Tuning)** Start/Stop input.

When the logic input is triggered ;

It is used to start or stop the Auto Tune operation.
If input is being active while Atun operation does not perform, automatic tune selection parameter AtEn is selected YES and then Auto Tune operation starts to run. If input is being active while Atun operation performs, Auto Tune operation is stopped.

0002 Ramp&Soak, Start / Stop input.

When the logic input is triggered ;

If Ramp / Soak control parameter rSSL is run or HoLd then oFF is selected
If it is oFF then run is selected.

0003 Ramp&Soak, Start / Hold input.

When the logic input is triggered ;

If Ramp / Soak control parameter rSSL is
run then HoLd is selected
HoLd then run is selected

0004 Alarm Latch Canceling.

When the logic input is triggered ;

If there is a latching alarm output and alarm condition is not active, latching is canceled.

These parameters are active if EMI-410 (0/4...20mA⎓Current Input) , EMI-430 (TC or 0...50mV⎓ input), EMI-440 (PT-100 Input) or EMI-450 (0...10V⎓Input) module is plugged in Module-1 socket.

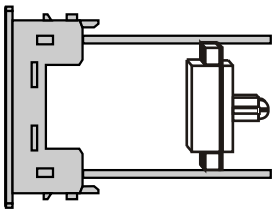

EMI - 410
EMI - 430
EMI - 440
EMI - 450

ioP1
ConF

iSL1 Configuration of analogue input module in Module-1 socket.

0000 TC input type selection. This must be selected if analogue input module in Module-1 socket is EMI-430.

0001 PT-100 input type selection. This must be selected, if analogue input module in Module-1 socket is EMI-440.

0002 ⎓Voltage / Current input type selection. This must be selected if analogue input module in Module-1 socket is EMI-410 , EMI-430 or EMI - 450.

iSL1 → tSL1

0000

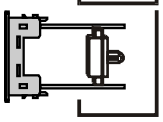

EMI-430

Selection of sensor type and scale for TC input module in Module-1 socket. It is active if input type of Module-1 is selected TC.

0000 L (-100°C;850°C) or (-148°F;1562°F)

0001 L (-100.0°C;850.0°C) or (-148.0°F;999.9°F)

0002 J (-200°C;900°C) or (-328°F;1652°F)

0003 J (-199.9°C;900.0°C) or (-199.9°F;999.9°F)

0004 K (-200°C;1300°C) or (-328°F;2372°F)

0005 K (-199.9°C;999.9°C) or (-199.9°F;999.9°F)

0006 R (0°C;1700°C) or (32°F;3092°F)

0007 R (0.0°C;999.9°C) or (32.0°F;999.9°F)

0008 S (0°C;1700°C) or (32°F;3092°F)

0009 S (0.0°C;999.9°C) or (32.0°F;999.9°F)

0010 T (-200°C;400°C) or (-328°F;752°F)

0011 T (-199.9°C;400.0°C) or (-199.9°F;752.0°F)

0012 B (44°C;1800°C) or (111°F;3272°F)

0013 B (44.0°C;999.9°C) or (111.0°F ; 999.9°F)

0014 E (-150°C;700°C) or (-238°F;1292°F)

0015 E (-150.0°C;700.0°C) or (-199.9°F;999.9°F)

0016 N (-200°C;1300°C) or (-328°F;2372°F)

0017 N (-199.9°C;999.9°C) or (-199.9°F;999.9°F)

0018 C (0°C;2300°C) or (32°F;3261°F)

0019 C (0.0°C;999.9°C) or (32.0°F;999.9°F)

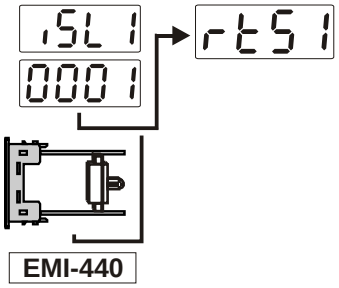

Selection of sensor type and scale for Pt-100 input module in Module-1 socket. It is active if input type of Module-1 is selected Pt-100.

0000 Sensor type : PT-100
Scale: -200°C to 650°C (If unit is °C)
Scale: -328°F to 1202°F (If unit is °F)

0001 Sensor type : PT-100
Scale: -199.9°C to 650.0°C (If unit is °C)
Scale: -199.9°F to 999.9°F (If unit is°F)

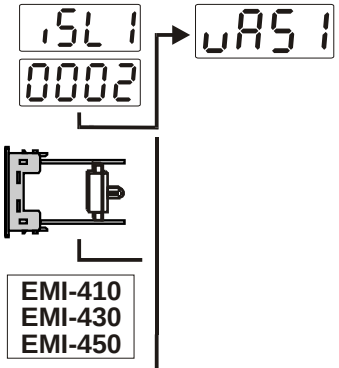

uAS1 It determines input type for ⎓Voltage/Current input module in Module-1 socket. (It is active if input type of Module-1 is selected ⎓Voltage /Current.)

0000 If Module-1 is EMI-410 ; 0 ... 20mA⎓ input is selected.
If Module-1 is EMI-430 ; 0 ... 50mV⎓ input is selected.
If Module-1 is EMI-450 ; 0 ... 10V⎓ input is selected.

0001 If Module-1 is EMI-410 ; 4 ... 20mA⎓ input is selected.
If Module-1 is EMI-430 ;10 ... 50mV⎓ input is selected.
If Module-1 is EMI-450 ; 2 ... 10V⎓ input is selected.

dPn1 It determines point position for display. It is active if input type of Module-1 is selected ⎓Voltage / Current.

0000 No point

0001 000.0

0002 00.00

0003 0.000

iCA1 It is active if ⎓Voltage / Current input is selected for Module-1. It determines calibration type.

0000 Fixed dual point calibration is performed. Maximum and minimum value of calibration can not be adjusted. Minimum value of calibration is -1999 and maximum value of calibration is 9999.

0001 Selectable dual point calibration is performed.

iCA1 / 0001 → iCL1: Defines minimum value for selectable dual point calibration. It is active if ⎓Voltage / Current is selected. It can be adjusted from -1999 to 9999.

iCH1: Defines maximum value for selectable dual point calibration. It is active if ⎓Voltage / Current is selected. It can be adjusted from -1999 to 9999.

unt1: Unit selection

- °C: Unit is °C.
- °F: Unit is °F.

iSL1 / 0002 →
- U: Unit is U. It is active if input type of Module-1 is selected ⎓Voltage / Current.
- -: No unit. It is active if input type of Module-1 is selected ⎓Voltage / Current.

LoL1: Minimum value of operating scale (Low Limit). It can be changed according to analogue input type and scale.

uPL1: Maximum value of operating scale (High Limit). It can be changed according to analogue input type and scale.

iPu1: Display offset for value in analogue input module. It can be adjusted from -10% to +10% of scale. This value is added to the process value.

iFL1: It is filter time for input signal. It can be adjusted from 0.0 to 900.0 seconds.

iSL1 / 0000 → CJn1: It decides if cold junction compensation is active or not for TC input module in Module-1 socket. It is active if process input of Module-1 is TC input.

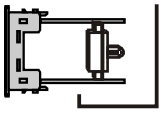

EMI-430

- YES: Cold junction compensation is active
- no: Cold junction compensation is not active

rES1: It determines if the measured value from analogue input module in Module-1 socket is used as Remote Set or not. This parameter is visible if point position and unit parameters are same for process input and analogue input module.

- YES: Measured value from analogue input module in Module-1 socket is used as process set value. User defined process set value is not considered.
- no: Measured value from analogue input module in Module-1 socket is not used as process set value. User defined process set value is considered.

These parameters are active if EMI-420 (∼CT) Input Module is plugged in Module-1 socket.

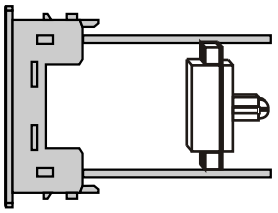

EMI-420

ioP1
ConF

Ctr1 Current transfer ratio for Module-1. It can be adjusted from 0 to 100

Example : For 100:5A type current transformer ;

This parameter must be Ctr1 = 100/5 = 0020

Current Transformer

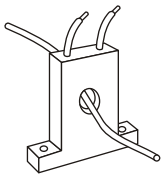

Calculating set value for heating failure

Set = [(Current value without failure + Current value with heater failure)] / 2

For example ; If there is a system with one heater (200V∼ and 1kW) ;
In normal conditions current in heater = 1000 / 200 = 5A
If there is a heater failure no current will be on the heater (0 A).
Then Set value must be adjusted = (5+0) /2 =2.5A

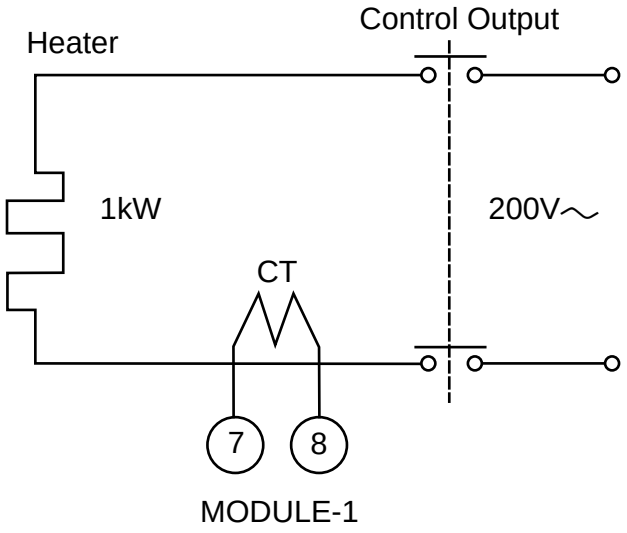

For correct measurements with EMI-420 (∼CT) Input Module in Module-1 socket, heating output mut be active minimum for 0.2 sec (200 msec).

If a system operates with PID control form, heating minimum output time oLtH must be minimum 0.2 sec.

For example ;If there is a system with three heater (200V~ and 1kW) ;
In normal conditions current in heater ; [1000 / 200]*3 = 5A *3 = 15A
If one of the heater is out of order, there is 5*2 = 10A current on two heaters. Current in heater failure is 10A. Then Set value must be adjusted (15+10) /2 =12.5A

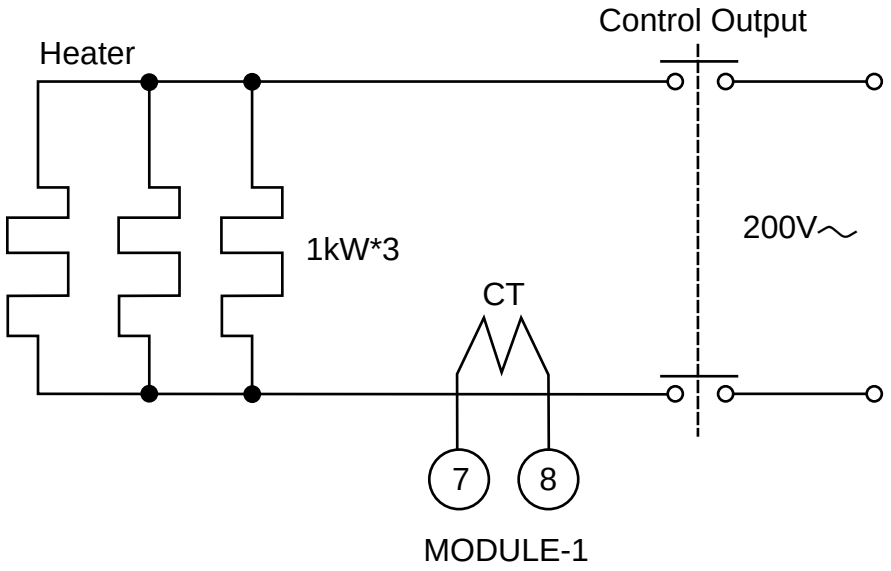

For correct measurements with EMI-420 (~CT) Input Module in Module-1 socket, heating output mut be active minimum for 0.2 sec (200 msec).

If a system operates with PID control form, heating minimum control time oLtH must be minimum 0.2 second.

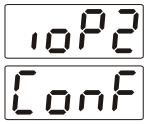

8.2.4 MODULE-2 Configuration Parameters

Module-2 configuration parameters are arranged automatically by the device according to the module type in Module-2 socket. These parameters are not accessible if there is no module in Module-2 socket.

EMO-400, EMO-410, EMO-420

- out2 — Defines output function
- Con2 — Defines control algorithm of output module
- HYS2 — Hysteresis value of output module
- HYn2 — Defines operation form of hysteresis
- tn72 — In ON/OFF operation, this time must be passed for the output to be energised again.
- Lou2 — Defines logic output function
- ALS2 — Selection of measurement input for alarm output. (There must be one of analogue input modules in Module-1 socket.)
- ALt2 — Defines alarm type
- ALH2 — Alarm hysteresis value
- Aon2 — Alarm on delay time
- AoF2 — Alarm off delay time

EMO-430

- oAt2 — Configuration of analogue output module
- ouA2 — Function selection of analogue output
- rEt2 — It determines "*re-transmission*" function for analogue output module

EMI-400

- L in2 — Configuration of logic input

EMI-410, EMI-430, EMI-440 , EMI-450

- iSL2 — Configuration of analogue input module
- tSL2 — Selection of sensor type and scale for TC input module
- rtS2 — Selection of sensor type and scale for PT-100 input module
- uAS2 — It determines input type for ⎓Voltage/Current input module
- dPn2 — It determines point position for display.
- iCA2 — It determines calibration type.
- iCL2 — It defines minimum value for selectable dual point calibration.

EMI-410, EMI-430, EMI-440 , EMI-450



It defines maximum value for selectable dual point calibration. It is active if ⎓Voltage/Current input is selected.



Unit selection



Minimum value of operating scale



Maximum value of operating scale



Display offset for measured value from analogue input module.



Filter time for input signal



It determines if cold junction compensation is active or not. It is active if input module is TC.



Remote Set function

EMI-420



Current transfer ratio parameter for ∼CT input module

Module-2 configuration parameters are defined according to which input / output modules are plugged in Module-2 socket.

ioP2 ConF

These parameters are active if EMO-400 (Relay Output) , EMO-410 (SSR Driver) or EMO-420 (Digital Output) module is plugged in Module-2 socket.

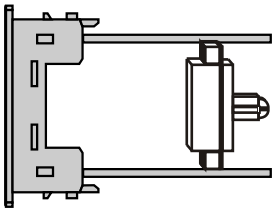

EMO - 400
EMO - 410
EMO - 420

ioP2
ConF

out2 Determines output function for Module-2

- **HEAt** Heating
- **CooL** Cooling
- **Lout** Logic output

out2 / **HEAt** OR **CooL** → **Con2** It defines control algorithm of output module in Module-2 socket. It is active if output function of Module-1 is heating or cooling.

- **on.oF** ON/OFF control algorithm
- **PId** PID control algorithm

Con2 / **on.oF** →

HYS2 Hysteresis value for OUT-2. It can be adjusted from 0% to 50% of defined scale. (It is active if ON/OFF control is selected)

HYn2 It determines operation form of hysteresis.
(It is active if ON/OFF control is selected)

- **0000** SV + HYS/2 and SV - HYS/2
- **0001** SV and SV+HYS or SV and SV-HYS

tn2 In ON/OFF operation, this time must be passed for the output to be energised again. It can be adjusted from 0.0 to 100.0.
(It is active if ON/OFF control is selected)

out2 → Lou2

Lout

It determines logic output function of output module in Module-2 socket. It is active if output function of Module-2 is Lout (Logic Output)

0000 Alarm output

0001 Manual / Automatic data output

0002 Sensor break alarm output

0003 Output is active when the process value is out of the band which is defined with minimum value of operating scale LoL and maximum value of operating scale uPL

0004 Output indicates that Ramp/Soak function has finished

MODULE-1

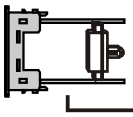

EMI-410
EMI-430
EMI-440
EMI-450

0005 Sensor break alarm output for analogue input module in Module-1 socket. (It is visible if one of analogue input modules is plugged in Module-1 socket)

0006 If process value is less than minimum value of operating scale LoL1 for analogue input module in Module-1 socket or greater than maximum value of operating scale uPL1 for analogue input module in Module-1 socket, process output becomes active.(This parameter is visible if one of the analogue input modules is plugged in Module-1 socket)

Lou2 → AL52

0000

Measurement input selection for Module-2 alarm output. This parameter is visible if Logic output function of Module-2 is Alarm output and one of the analogue input modules is plugged in Module-1 socket

MODULE-1

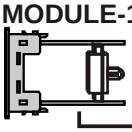

EMI-410
EMI-430
EMI-440
EMI-450

0000 Alarm output runs according to the process input.

0001 Alarm output runs according to the analogue input module (2nd sensor input) in Module-1 socket.

Lou2 → ALt2

0000

It determines alarm type. It is active if logic output function of Module-2 is an alarm output.

0000 Process high alarm

0001 Process low alarm

AL52

0000

If there is no analogue input module in Module-1 socket

0002 Deviation high alarm. It is active when alarm output runs according to the process input.

0003 Deviation low alarm. It is active when alarm output runs according to the process input.

0004 Deviation band alarm. It is active when alarm output runs according to the process input.

0005 Deviation range alarm. It is active when alarm output runs according to the process input.

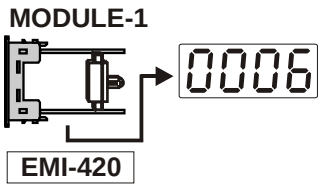

Heater failure alarm. It is active if ∼CT input module is plugged in Module-1 socket.

Process High Alarm

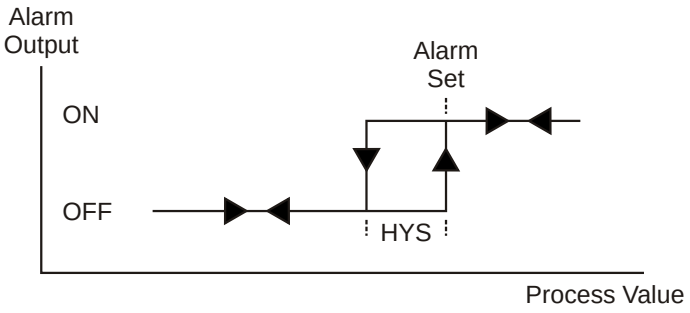

Process Low Alarm

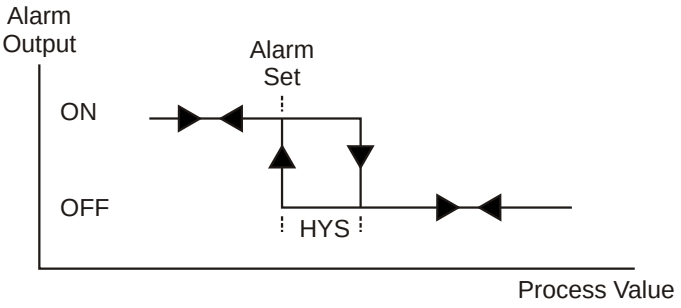

Deviation High Alarm

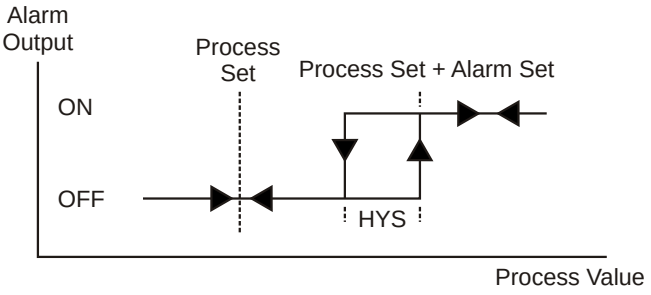

Deviation Low Alarm

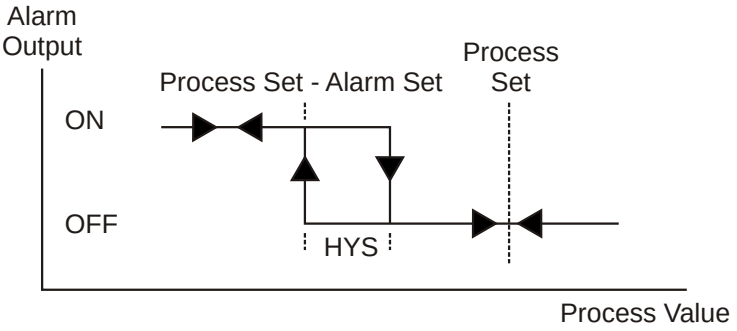

Deviation Band Alarm

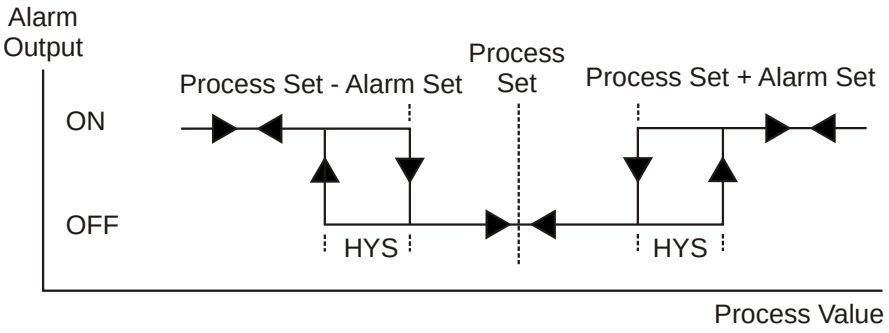

Deviation Range Alarm

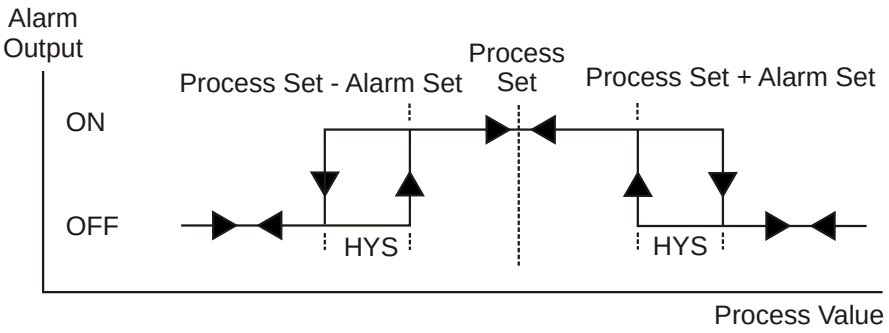

Lou2 / 0000 → ALH2

Alarm- 2 hysteresis value. It is active if logic output function of Module-2 is alarm output.

If AL52 is 0000 or there is no analogue input module (2nd sensor input) in Module-1 socket, then it can be adjusted from 0% to 50% of process input scale (uPL - LoL)

If AL52 is 0001 and there is one of an analogue input module (2nd sensor input) in Module-1 socket, then it can be adjusted from 0% to 50% of analogue input module scale (uPL 1 - LoL 1)

If there is ∼CT input module (EMI-420) in Module-1 socket and alarm type parameter ALt2 is 0006 , then it can be adjusted from 0.0 to 20.0A∼

Aon2

Alarm on delay time. It can be adjusted from 0000 to 9999 seconds. It is active if logic output function of Module-2 is alarm output.

AoF2

Alarm off delay time. It can be adjusted from 0000 to 9998 seconds. When the value is greater than 9998, LtCH is seen on the display. It means alarm latching output is selected. It is active if logic output function of Module-2 is alarm output.

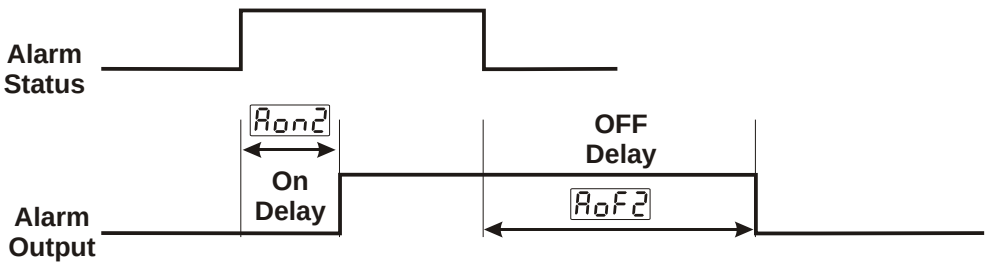

These parameters are active if EMO-430 (0/4...20mA⎓ Current Output) module is plugged in Module-2 socket.

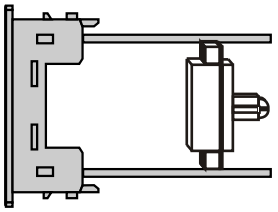

EMO-430

ioP2
ConF

oAt2 Configuration of analogue output module in Module-2 socket.

0000 0...20mA output or 0...10V⎓ according to Section 5.2.5 is selected.

0001 4...20mA output or 2...10V⎓ according to Section 5.2.5 is selected.

ouA2 Function selection of analogue output module in Module-2 socket.

HEAt Analogue output module in Module-2 socket is used for heating

CooL Analogue output module in Module-2 socket is used for cooling

rEtr Analogue output module in Module-2 socket is used for "*re-transmission*"

ouA2 → rEt2
rEtr

Defines "*Re-transmission*" function. (It is active if "*re-transmission*" function is selected for analogue output module in Module-2 socket)

rt.Pr It retransmits Process value to analogue output.

rt.Er It retransmits difference between Process and Set value to analogue output.

rt.PU It retransmits Set value to analogue output.

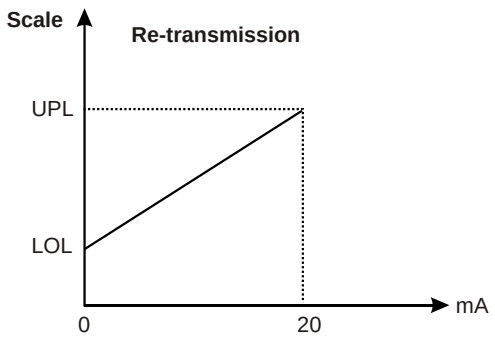

These parameters are active if EMI-400 (Digital Input) is plugged in Module-2 socket.

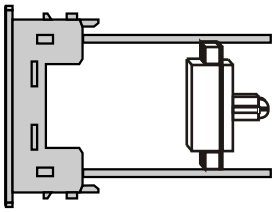

EMI-400

ioP2
ConF

L in2 Configuration of digital input in Module-2 socket.

0000 Manual / Automatic selection input

When the logic input is triggered ;

In PID Tune and selection of operation form menu (run List) , if selection of operation form parameter (Auto) is mAn , then Auto is selected, if Auto parameter is Auto , then mAn is selected.

0001 **Auto Tune (Limit Cycle Tuning)** Start/Stop input

When the logic input is triggered ;

It is used to start or stop the Auto Tune operation.
If input is being active while Atun operation does not perform, automatic tune selection parameter AtEn is selected YES and then Auto Tune operation starts to run. If input is being active while Atun operation performs, Auto Tune operation is stopped.

0002 Ramp&Soak, Start / Stop input

When the logic input is triggered ;

If Ramp / Soak control parameter rSSL is run or HoLd then oFF is selected
If it is oFF then run is selected.

0003 Ramp&Soak, Start / Hold input

When the logic input is triggered ;

If Ramp / Soak control parameter rSSL is run then HoLd is selected
HoLd then run is selected

0004 Alarm Latch Canceling.

When the logic input is triggered ;

If there is a latching alarm output and alarm condition is not active, latching is canceled.

These parameters are active if EMI-410 (0/4...20mA⎓ Current Input) , EMI-430 (TC or 0...50mV⎓ Input), EMI-440 (PT-100 Input) or EMI-450 (0...10V⎓Input) module is plugged in Module-2 socket.

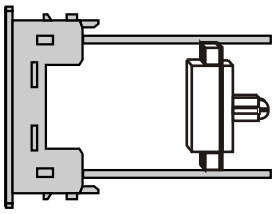

EMI - 410
EMI - 430
EMI - 440
EMI - 450

ioP2
ConF

iSL2 Configuration of analogue input module in Module-2 socket

0000 TC input type selection. This must be selected if analogue input module in Module-2 socket is EMI-430.

0001 PT-100 input type selection. This must be selected, if analogue input module in Module-2 socket is EMI-440.

0002 ⎓Voltage / Current input type selection. This must be selected if analogue input module in Module-2 socket is EMI-410 , EMI-430 or EMI - 450.

iSL2 → tSL2
0000

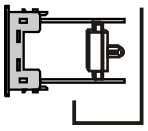

EMI-430

Selection of sensor type and scale for TC input module in Module-2 socket. It is active if input type of Module-2 is selected TC.

0000 L (-100°C;850°C) or (-148°F;1562°F)

0001 L (-100.0°C;850.0°C) or (-148.0°F;999.9°F)

0002 J (-200°C;900°C) or (-328°F;1652°F)

0003 J (-199.9°C;900.0°C) or (-199.9°F;999.9°F)

0004 K (-200°C;1300°C) or (-328°F;2372°F)

0005 K (-199.9°C;999.9°C) or (-199.9°F;999.9°F)

0006 R (0°C;1700°C) or (32°F;3092°F)

0007 R (0.0°C;999.9°C) or (32.0°F;999.9°F)

0008 S (0°C;1700°C) or (32°F;3092°F)

0009 S (0.0°C;999.9°C) or (32.0°F;999.9°F)

0010 T (-200°C;400°C) or (-328°F;752°F)

0011 T (-199.9°C;400.0°C) or (-199.9°F;752.0°F)

0012 B (44°C;1800°C) or (111°F;3272°F)

0013 B (44.0°C;999.9°C) or (111.0°F ; 999.9°F)

0014 E (-150°C;700°C) or (-238°F;1292°F)

0015 E (-150.0°C;700.0°C) or (-199.9°F;999.9°F)

0016 N (-200°C;1300°C) or (-328°F;2372°F)

0017 N (-199.9°C;999.9°C) or (-199.9°F;999.9°F)

0018 C (0°C;2300°C) or (32°F;3261°F)

0019 C (0.0°C;999.9°C) or (32.0°F;999.9°F)

iSL2 → rtS2

0001

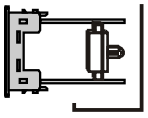

EMI-440

Selection of sensor type and scale for Pt-100 input module in Module-2 socket. It is active if input type of Module-2 is selected Pt-100.

0000 Sensor type : PT-100
Scale: -200°C to 650°C (If unit is °C)
Scale: -328°F to 1202°F (If unit is °F)

0001 Sensor type : PT-100
Scale: -199.9°C to 650.0°C (If unit is °C)
Scale: -199.9°F to 999.9°F (If unit is°F)

iSL2 → uAS2

0002

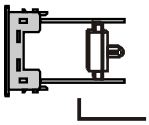

EMI-410
EMI-430
EMI-450

It determines input type for ⎓Voltage/Current input module in Module-2 socket. (It is active if input type of Module-2 is selected ⎓Voltage /Current.)

0000 If Module-2 is EMI-410 ; 0 ... 20mA⎓ input is selected.
If Module-2 is EMI-430 ; 0 ... 50mV⎓ input is selected.
If Module-2 is EMI-450 ; 0 ... 10V⎓ input is selected.

0001 If Module-2 is EMI-410 ; 4 ... 20mA⎓ input is selected.
If Module-1 is EMI-430 ;10 ... 50mV⎓ input is selected.
If Module-1 is EMI-450 ; 2 ... 10V⎓ input is selected.

dPn2

It determines point position for display. It is active if input type of Module-2 is selected ⎓Voltage / Current.

0000 No point

0001 000.0

0002 00.00

0003 0.000

iCA2

It is active if ⎓Voltage/Current input is selected for Module-2. It determines calibration type.

0000 Fixed dual point calibration is done. Maximum and minimum value of calibration can not be adjusted. Minimum value of calibration is -1999 and maximum value of calibration is 9999.

0001 Selectable dual point calibration is done.

iCA2 / 0001

iCL2 Defines minimum value for selectable dual point calibration. It is active if ⎓Voltage / Current input is selected. It can be adjusted from -1999 to 9999.

iCH2 Defines maximum value for selectable dual point calibration. It is active if ⎓Voltage / Current input is selected. It can be adjusted from -1999 to 9999.

unt2 Unit selection

- **°C** Unit is °C.
- **°F** Unit is °F.

iSL2 / 0002

- **U** Unit is U. It is active if input type of Module-2 is selected ⎓Voltage / Current.
- **-** No unit. It is active if input type of Module-2 is selected ⎓Voltage / Current.

LoL2 Minimum value of operating scale (Low Limit). It can be changed according to analogue input type and scale.

uPL2 Maximum value of operating scale (High Limit). It can be changed according to analogue input type and scale.

iPu2 Display offset for value in analogue input module. It can be adjusted from -10% to +10% of scale. This value is added to the process value.

iFL2 It is filter time for input signal. It can be adjusted from 0.0 to 900.0 seconds.

iSL2 / 0000

CJn2 It determines if cold junction compensation is active or not for TC input module in Module-2 socket. It is active if process input of Module-2 is TC input.

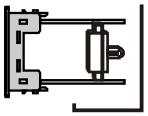

EMI-430

- **YES** Cold junction compensation is active
- **no** Cold junction compensation is not active

rES2 It determines if the measured value from analogue input module in Module-2 socket is used as Remote Set or not. This parameter is visible if point position and unit parameters are same for process input and analogue input module.

- **YES** Measured value from analogue input module in Module-2 socket is used as process set value. User defined process set value is not considered.
- **no** Measured value from analogue input module in Module-2 socket is not used as process set value. User defined process set value is considered.

These parameters are active if EMI-420 (∼CT) Input Module is plugged in Module-2 socket.

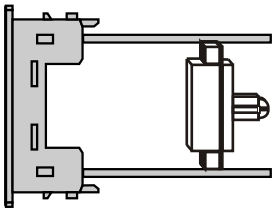

EMI-420

ioP2
ConF

Ctr2 Current transfer ratio for Module-2. It can be adjusted from 0 to 100

Example : For 100:5A type current transformer ;

This parameter must be Ctr2 = 100/5 = 0020

Current Transformer

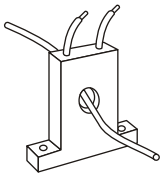

Calculating set value for heating failure

Set = [(Current value without failure + Current value with heater failure)] / 2

For example ; if there is a system with one heater (200V∼ and 1kW) ;
In normal conditions current in heater = 1000 / 200 = 5A
If there is a heater failure no current will be on the heater (0 A).
Then Set value must be adjusted = (5+0) /2 =2.5A

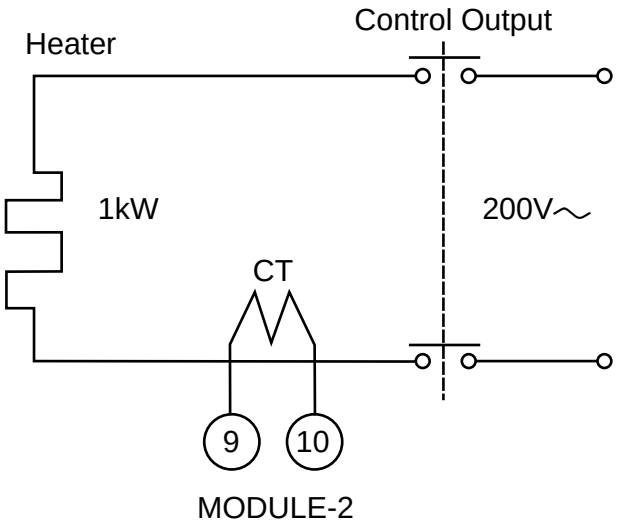

For correct measurements with EMI-420 (∼CT) Input Module in Module-2 socket, heating output mut be active minimum for 0.2 sec (200 msec).

If a system operates with PID control form, heating minimum output time oLtH must be minimum 0.2 sec.

For example ;if there is a system with three heater (200V~ and 1kW) ;
In normal conditions current in heater ; [1000 / 200]*3 = 5A *3 = 15A
If one of the heater is out of order, there is 5*2 = 10A current on two heaters. Current in heater failure is 10A. Then Set value must be adjusted (15+10) /2 =12.5A

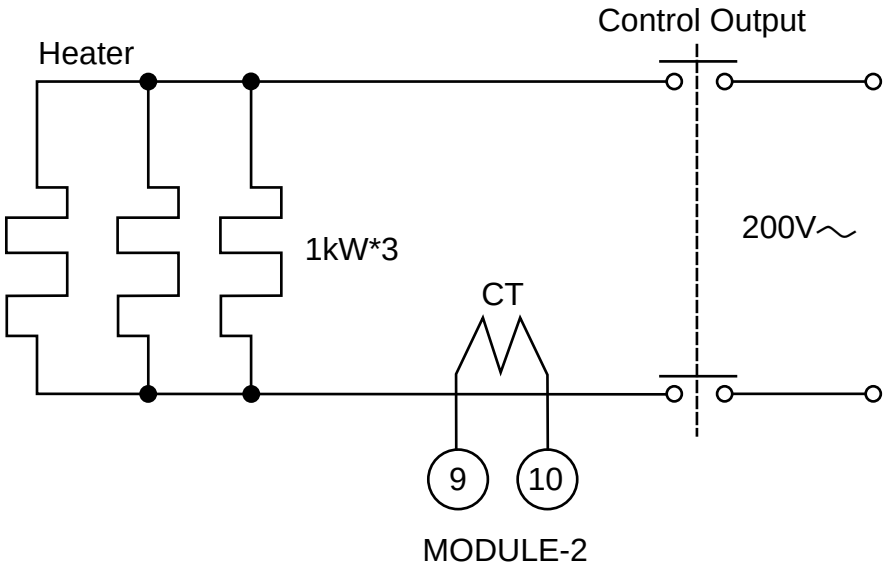

For correct measurements with EMI-420 (~CT) Input Module in Module-2 socket, heating output must be active minimum for 0.2 sec (200 msec).

If a system operates with PID control form, heating minimum control time oLtH **must be minimum 0.2 second.**

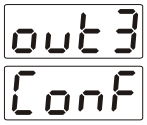

8.2.5 OUTPUT-3 Configuration Parameters

out3 Defines output function for Output-3

- **HEAt** Heating
- **CooL** Cooling
- **Lout** Logic output

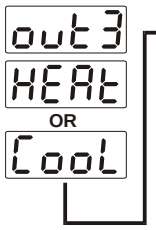

Con3 Defines control algorithm of Output-3. It is active if output function of Output-3 is heating or cooling.

- **on.oF** ON/OFF control algorithm
- **PID** PID control algorithm

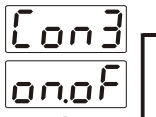

HYS3 Hysteresis value for OUT-3. It can be adjusted from 0% to 50% of defined scale. (It is active if ON/OFF control is selected)

HYn3 It determines operation form of hysteresis.
(It is active if ON/OFF control is selected)

- **0000** SV + HYS/2 and SV - HYS/2
- **0001** SV and SV+HYS or SV and SV-HYS

tn73 In ON/OFF operation, this time must be passed for the output to be energised again. It can be adjusted from 0.0 to 100.0 seconds.
(It is active if ON/OFF control is selected)

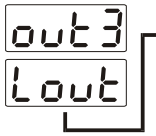

Lou3 It determines logic output function of Output-3. It is active if output function of Output-3 is Lout (Logic Output)

- **0000** Alarm output
- **0001** Manual / Automatic data output
- **0002** Sensor break alarm output
- **0003** Output is active when the process value is out of the band which is defined with minimum value of operating scale **LoL** and maximum value of operating scale **uPL**
- **0004** Output indicates that Ramp/Soak function has finished

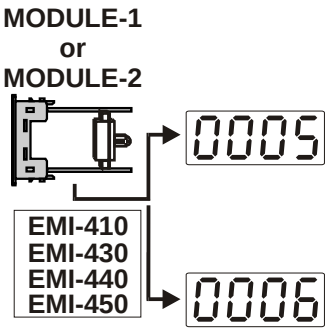

Sensor break alarm output for analogue input module in Module-1or Module-2 socket. (It is visible if one of analogue input modules is plugged in Module-1 or Module-2 socket)

If process value is less than minimum value of operating scale LoL1 or LoL2 for analogue input module in Module-1 or Module-2 socket or greater than maximum value of operating scale uPL1 or uPL2 for analogue input module in Module-1 or Module-2 socket, process output becomes active.(This parameter is visible if one of the analogue input modules is plugged in Module-1 or Module-2 socket)

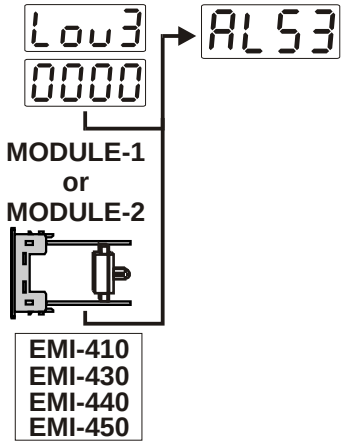

Measurement input selection for Output-3 alarm output. This parameter is visible if Logic output function of Output-3 is Alarm output and one of the analogue input modules is plugged in Module-1 or Module-2 socket

0000 Alarm output runs according to the process input.

0001 Alarm output runs according to the analogue input module (2nd sensor input) in Module-1 or Module-2 socket.

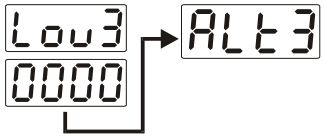

It determines alarm type. It is active if logic output function of Output-3 is alarm output.

0000 Process high alarm

0001 Process low alarm

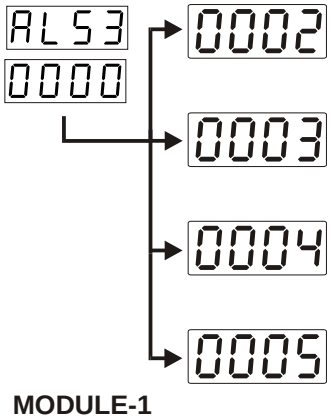

0002 Deviation high alarm. It is active when alarm output runs according to the process input.

0003 Deviation low alarm. It is active when alarm output runs according to the process input.

0004 Deviation band alarm. It is active when alarm output runs according to the process input.

0005 Deviation range alarm. It is active when alarm output runs according to the process input.

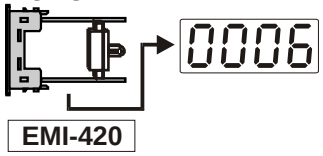

0006 Heater failure alarm. It is active if ∿CT input module is plugged in Module-1 or Module-2 socket.

Process High Alarm

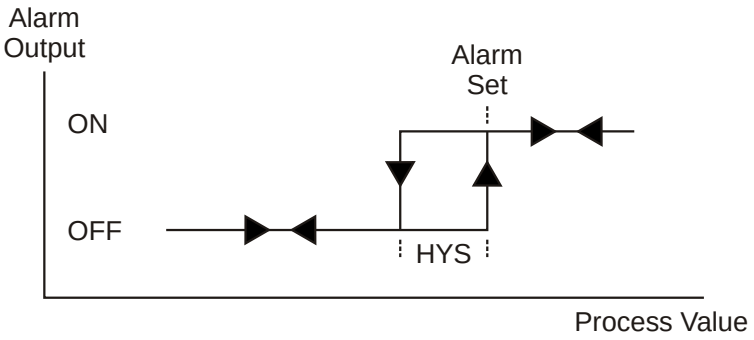

Process Low Alarm

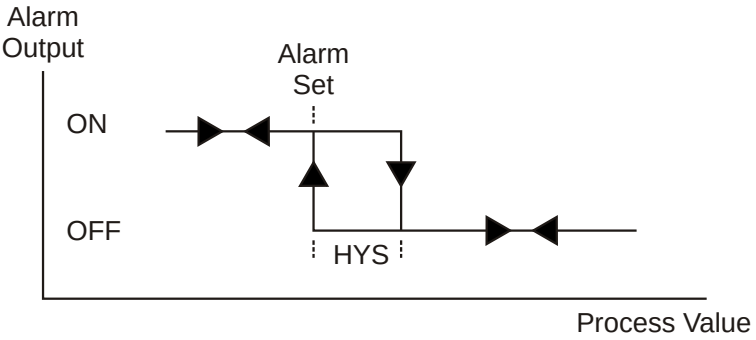

Deviation High Alarm

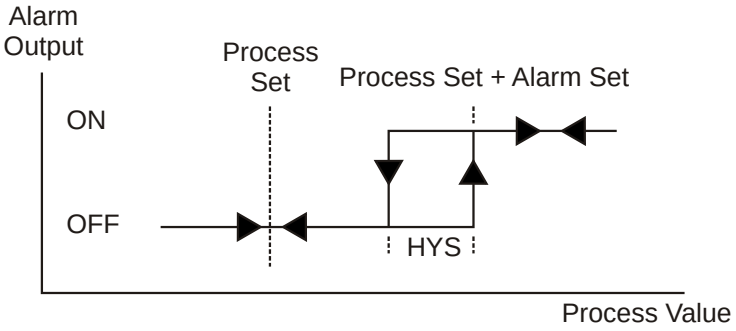

Deviation Low Alarm

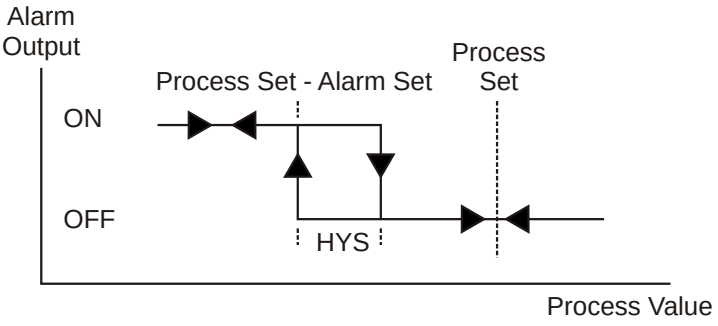

Deviation Band Alarm

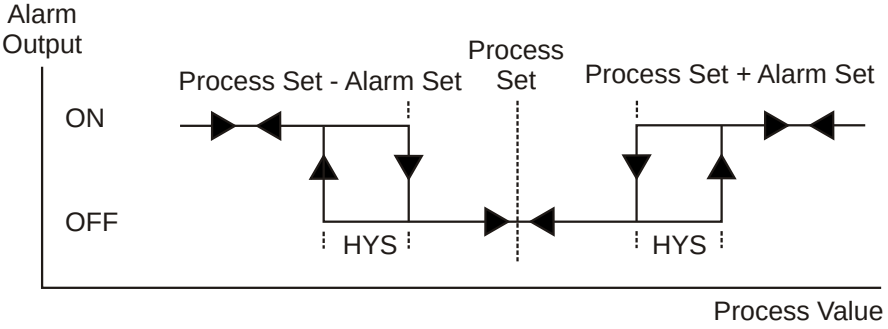

Deviation Range Alarm

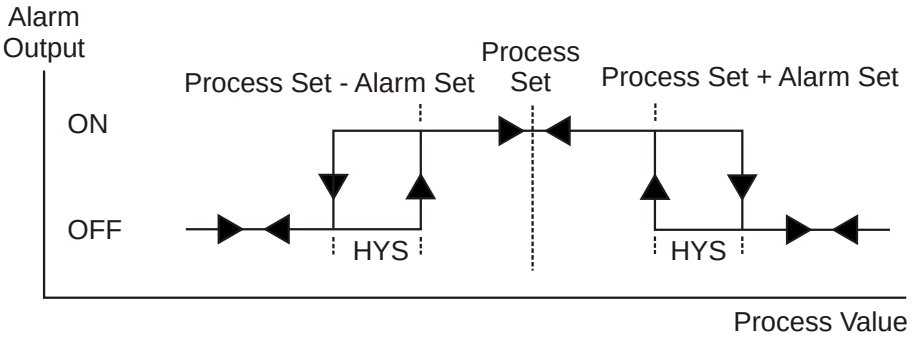

Lou3 / 0000 → ALH3

Alarm- 3 hysteresis value. It is active if logic output function of Output-3 is alarm output.

If AL53 is 0000 or there is no analogue input module (2nd sensor input) in Module-1 or Module-2 socket, then it can be adjusted from 0% to 50% of process input scale (uPL - LoL)

If AL53 is 0001 and there is one of an analogue input module (2nd sensor input) in Module-1 or Module-2 socket, then it can be adjusted from 0% to 50% of analogue input module scale (uPL2 - LoL2) or (uPL1 - LoL1)

If there is ∿CT input module (EMI-420) in Module-1 or Module-2 socket and alarm type parameter ALt3 is 0006 , then it can be adjusted from 0.0 to 20.0A∿

→ Aon3

Alarm on delay time. It can be adjusted from 0000 to 9999 seconds. It is active if logic output function of Module-1 is alarm output.

→ AoF3

Alarm off delay time. It can be adjusted from 0000 to 9998 seconds. When the value is greater than 9998, LtCH is seen on the display. It means alarm latching output is selected. It is active if logic output function of Output-3 is alarm output.

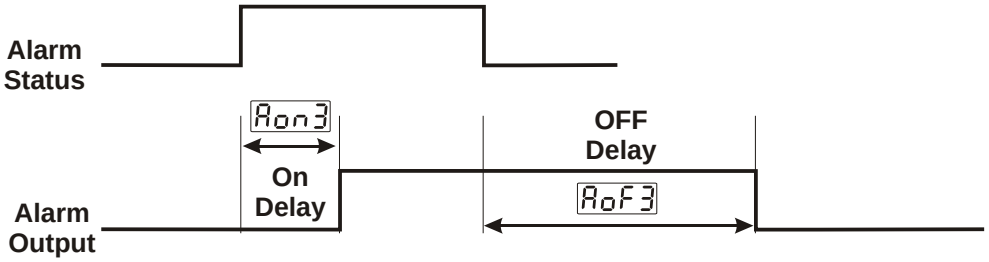

GEnn
ConF

8.2.6 General Parameters

SU-L Minimum value for process set and alarm set values. It is named as low limit of set scale.
It can be adjusted from low limit of input selected with ,SSL parameter to SU-u parameter.
Please refer to Section 8.2.1 Process Input Type and Relevant Parameters with Process Input for ,SSL parameter

SU-u Maximum value for process set and alarm set values. It is named as high limit of set scale.
It can be adjusted from SU-L to high limit of input selected with ,SSL Parameter.
Please refer to Section 8.2.1 Process Input Type and Relevant Parameters with Process Input for ,SSL parameter

SUL2 Minimum value for set value of second sensor (analogue input module) in Module-1 or Module-2 socket. It is named as low limit of set scale for second sensor.
It can be adjusted from low limit of analogue input selected with ,SL1 or ,SL2 Parameter to SUu2 parameter.
Please refer to Section 8.2.3 (Module-1 Configuration Parameters) and Section 8.2.4 (Module-2 Configuration Parameter) for ,SL1 and ,SL2 Parameters.
(This parameter is visible if one of the analogue input modules is plugged in Module-1 or Module-2 socket)

SUu2 Maximum value for set value of second sensor (analogue input module) in Module-1 or Module-2 socket. It is named as high limit offset scale for second sensor.
It can be adjusted from SUL2 to high limit of analogue input selected with ,SL1 Parameter to ,SL2 parameter.
Please refer to Section 8.2.3 (Module-1 Configuration Parameters) and Section 8.2.4 (Module-2 Configuration Parameter) for ,SL1 and ,SL2 Parameters.
(This parameter is visible if one of the analogue input modules is plugged in Module-1 or Module-2 socket)

ULtt Motor travel time. It can be adjusted from **5 to 600** seconds.
(It is active if motorized valve control is selected)

ULHY Minimum time of motorized valve output activation. It can be adjusted from **0.1%** to **5.0%.**
If ULtt = 100 sec and ULHY = 1.0% then minimum time of motorized valve output activation is 100 * 1.0% = 1 sec
(It is active if motorized valve control is selected)

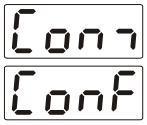

8.2.7 Parameters for Configuration of Serial Communication



Communication Accessing Address

Communication accessing address of device. It can be adjusted from 1 to 247.



Communication Baud Rate



1200 Baud Rate.



2400 Baud Rate.



4800 Baud Rate.



9600 Baud Rate.



19200 Baud Rate.



Parity Selection for Communication



No parity.



Odd parity.



Even parity.



Stop Bit Selection for Communication



1 stop bit



2 stop bits

PASS
ConF

8.2.8 Operator and Technician Passwords

OPPS It is used for accessing to the operator parameters.
It can be adjusted from 0 to 9999.

If it is 0000 ; no password protection while entering to the operator parameters.

If it is different from " 0" and user wants to access to the operator parameters;
1- If user does not enter OPPS password correctly:
It turns to operation screen without accessing to parameters.

2- When OPPS in top display and 0000 in bottom display are seen, if user presses SET button without entering OPPS password (For observing the parameters):
Operator can see operator menus and parameters but operator can not change the parameters
(Please refer to Section 9. Failure Messages in ESM-4450 Process Controllers)

tCPS It is used for accessing to the technician parameters.
It can be adjusted from 0 to 9999.

If it is 0000 ; no password protection while entering to the technician parameters.

If it is different from " 0" and user wants to access to the technician parameters;
1- If user does not enter tCPS password correctly:
It turns to operation screen without accessing to parameters.

2- When tCPS in top display and 0000 in bottom display are seen, if user presses SET button without entering tCPS password (For observing the parameters):
Technician can see all menus and parameters except Operator and Technician Password menu ("Pass Conf") but technician can not change the parameters
(Please refer to Section 9. Failure Messages in ESM-4450 Process Controllers)

9. Failure Messages in ESM-4450 Process Controllers

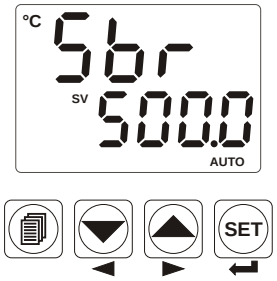

1 - Sensor failure in analogue inputs. Sensor connection is wrong or there is no sensor connection.

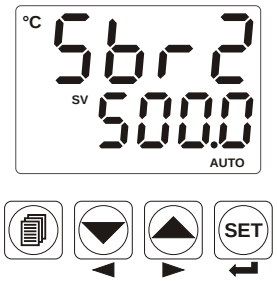

2 - If tdSP parameter in "Disp List" menu is 0002 and analogue input module is plugged in Module-1 or Module-2 socket, this is sensor failure of analogue input module. Sensor connection is wrong or there is no sensor connection.

Please refer to Section 8.1.3 for detailed information about this parameter.



3 - If tdSP parameter is 0000 and bdSP parameter is 0003 and analogue input module is plugged in Module-1 or Module-2 socket, this is sensor failure of analogue input module. Sensor connection is wrong or there is no sensor connection.

Please refer to Section 8.1.3 for detailed information about this parameter.



4 - If top display blinks : If analogue input value is less than minimum value of operating scale LoL top display starts to blink.

In "PýnP Conf" Menu if;
iSSL = 0000 ; tCSL = 0003 ; unit = °C ;
LoL = -199.9 ; uPL = 900.0 are defined.
Adjust LoL -150.0

If analogue input value is less than minimum value of operating scale LoL top display starts to blink.

Please refer to Section 8.2.1 for detailed information about this parameter.

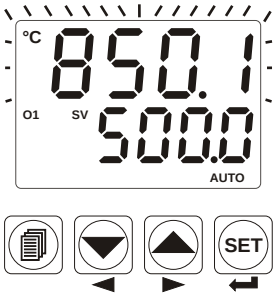

5 - If top display blinks : If analogue input value is greater than maximum value of operating scale uPL , top display starts to blink.

In “PýnP Conf” Menu ;
iSSL = 0000 ; tCSL = 0003 ; unit = °C ;
LoL = -199.9 ; uPL = 900.0
Adjust uPL 850.0

If analogue input value is greater than maximum value of operating scale uPL , top display starts to blink.

Please refer to Section 8.2.1 for detailed information about this parameter.



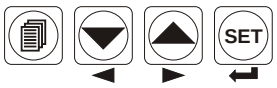

6 - If operator or technician password is different from “0” and user accesses to the parameter by Set button without entering the operator or technician password and wants to change a parameter, the warning message is shown on the bottom display as shown on the left. Device does not allow to do any changes without entering the password correctly.

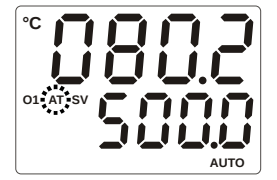

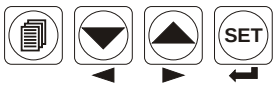

7 - If tuning operation can not be completed in 8 hours, AT led starts to blink.Blinking can be canceled by pressing Enter button.

Please refer to Section 8.1.2 for detailed information about this parameter.



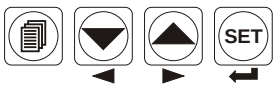

8 - If user does not do anything for 120 seconds while device is on operator or technician menus, device turns to operation screen.

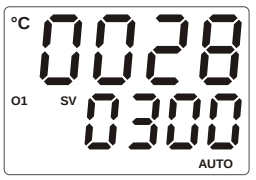

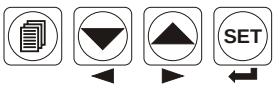

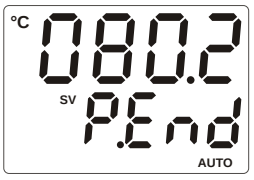

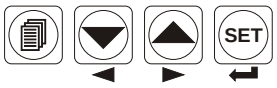

9 - When Ramp / Soak operation finishes ;

If bdSP parameter is 0002 , screen on the left is shown
(Please refer to Section 8.1.3 for bdsp parameter)

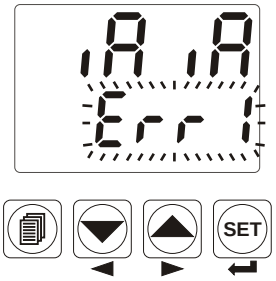

10 - When power is on ; not starting the normal operation and blinking the bottom display as shown on the left;
It appears when two analogue input modules (EMI-410, EMI-430, EMI-440, EMI-450) are plugged in Module-1 and Module-2 socket at the same time.
For starting normal operation power off and pull out one of the analogue input modules.

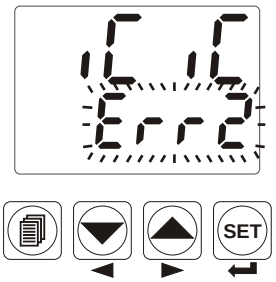

11 - When power is on ; not starting the normal operation and blinking the bottom display as shown on the left;
It appears when two EMI-420 ⏦CT input modules are plugged in Module-1 and Module-2 socket
For starting normal operation power off and pull out one of the EMI-420 ⏦CT input modules.

10. Specifications

Device Type	: Process Controller
Housing&Mounting	: 48mm x 48mm x 116mm 1/16 DIN 43700 plastic housing for panel mounting. Panel cut-out is 46x46mm.
Protection Class	: NEMA 4X (IP65 at front, IP20 at rear).
Weight	: Approximately 0.21 Kg.
Environmental Ratings	: Standard, indoor at an altitude of less than 2000 meters with none condensing humidity.
Storage/Operating Temperature	: -40 °C to +85 °C / 0 °C to +50 °C
Storage/Operating Humidity	: 90 % max. (None condensing)
Installation	: Fixed installation
Overvoltage Category	: II
Pollution Degree	: II, office or workplace, none conductive pollution
Operating Conditions	: Continuous
Supply Voltage and Power	: 100 - 240 V⏦(-15% / +10%) 50/60 Hz 6VA 24 V⏦(-15% / +10%) 50/60 Hz 6VA 24 V⎓(-15% / +10%) 6W
Process Inputs	: Universal input TC, RTD, ⎓Voltage/Current
Thermocouple Input Types	: Selectable by parameters L (DIN43710) , J ,K ,R ,S ,T ,B ,E ,N (IEC584.1)(ITS90) , C (ITS90)
Thermoresistance Input Types	: PT 100 (IEC751) (ITS90)
⎓Voltage Input Types	: Selectable by parameters 0...50mV⎓, 0...5V⎓, 0...10V⎓
⎓Current Input Types	: Selectable by parameters 0...20mA⎓, 4...20mA⎓
Accuracy	: ± 0,25% of full scale for thermocouple, thermoresistance and voltage, ± 0,70% of full scale for current.
Cold Junction Compensation	: Automatically ± 0.1°C/1°C.
Line Compensation	: Maximum 10 .
Sensor Break Protection	: Upscale

Sampling Cycle	: 3 samples per second
Input Filter	: 0.0 to 900.0 seconds
Control Forms	: Programmable ON / OFF, P, PI, PD or PID.
Standard Relay Output	: 5A @ 250V~ at resistive load (Electrical Life : 100.000 Operation (Full Load))
Optional Output Modules	:-EMO-400 Relay Output Module (3A@250V~ at resistive load) (Electrical Life : 100.000 Operation (Full Load)) -EMO-410 SSR Driver Output Module (Max. 26mA, 22V⎓) -EMO-420 Digital (Transistor) Output Module (Max 40mA@18V⎓) -EMO-430 0/4...20mA⎓ Current Output Module
Optional Input Modules	:-EMI-400 Digital Input Module -EMI-410 0/4...20mA⎓ Current Input Module -EMI-420 0...5A ~CT Input Module -EMI-430 TC or 0...50mV Input Module -EMI-440 PT-100 Input Module -EMI-450 0...10V⎓ Input Module
Standard Communication Module	: EMC-400 RS-232 Communication Module
Optional Communication Module	: EMC-410 RS-485 Communication Module
Communication Protocol	: MODBUS-RTU
Process Display	:10.1 mm Red 4 digits LED display
Set Display	: 8 mm Green 4 digits LED display
Led Indicators	: AT (Auto Tune), SV (Set value), Man (Manual Mode), Auto (Automatic Mode), O1 / 2 / 3 (Outputs) Leds, °C / °F / V unit, Ramp, Remote Leds
Approvals	: UL Recognized Component (File No : E 254103), GOST-R, CE

11. Other Informations