Safety relief valves for thermal, hydraulic and domestic water systems

311-312-313-314-513-514-527 EST series

CALEFFI

01253/20 EN



General

The 311, 312, 313, 314, 513 and 514 series safety relief valves are made by Caleffi S.p.A. in compliance with the essential safety requirements laid down by Directive 97/23/CE of the European Parliament and the Council of the European Union for harmonisation of member States with regard to pressurised equipment.

Function

Safety relief valves are typically used for pressure control on heat generators in heating systems, on hot water storage units in hydraulic and domestic water systems, and in hydraulic systems.

On reaching the setting pressure, the valve opens and, by discharging into the atmosphere, prevents the pressure in the system from reaching dangerous levels for the generator and for the components installed in the system.
527 EST series valves are fail-safe devices, i.e. they are guaranteed to operate even in the case of wear or breakage of the diaphragm.

CE 1115

Product range

311 series	Certified standard safety relief valve. F-F connections.	sizes 1/2”, 3/4”
312 series	Certified standard safety relief valve. M-F connections.	size 1/2”
313 series	Certified standard safety relief valve with pressure gauge or pressure gauge connection. F-F connections.	sizes 1/2”, 3/4”
314 series	Certified standard safety relief valve with pressure gauge or pressure gauge connection. M-F connections.	size 1/2”
513 series	Certified standard safety relief valve. F-F connections.	sizes 1/2”x1/2”, 1”x1 1/4”, 1 1/4”x1 1/2”
514 series	Certified standard safety relief valve. M-F connections.	size 1/2”
527 EST series	Certified standard safety relief valve. F-F connections.	size 1/2”x3/4”, 3/4”x1”, 1”x1 1/4”, 1 1/4”x 1 1/2”

Technical specifications

Materials:

Body:	- 1/2”-3/4”:	brass EN 12165 CW617N
	- 1”-1 1/4”:	brass EN 1982 CB753S
Cover:	brass EN 12165 CW617N	
	- 513-514 (1/2”):	PA6G30
Control stem:		brass EN 12164 CW614N
Obturator seal:		EPDM
Diaphragm:		EPDM
Spring:		steel EN 12270-1
Control knob:	- 311-312-313-314-513 (1/2”)-514:	ABS
	- 513 (1” and 1 1/4”)-527 EST:	PA6G20
Nominal pressure:		PN 10
Working temperature range:		5–110 °C

Performance:

Opening overpressure:	527 EST; P_{set} +10 %·P_{set}
	311-312-313-314-513-514; P_{set} +20 %·P_{set}
Closing differential:	P_{set} -20 %·P_{set}
Medium: water, air	
PED category:	IV

Settings:

311 series	1,5-2-2,5-3-3,5-4-5-5,5-6-7-8-9 bar
	(1,5 bar only 1/2”) (2-5,5-9 bar only 3/4”)
312 series	1.8-2,5-3-3,5-4-5-6-7-8 bar
313 series with pressure gauge	2,5-3-6-7-8 bar
313 series with pressure gauge connection	3 bar
314 series with pressure gauge	2,5-3-6-7-8 bar
314 series with pressure gauge connection	3-6 bar
513 series	1,5-2-2,5-3-3,5-4 - 5,5-6-7-8-9 bar
	(1,5-2 only 1/2” and 1”)(4-5,5-9 only 1”)
514 series	2-2,5-3-3,5-4-5-6-7-8 bar
527 EST series standard	2,25-2,5-2,7-3-3,5-4-4,5-5-5,4-6 bar
527 EST series special settings	1-1,5-2-7-8 bar

Dimensions

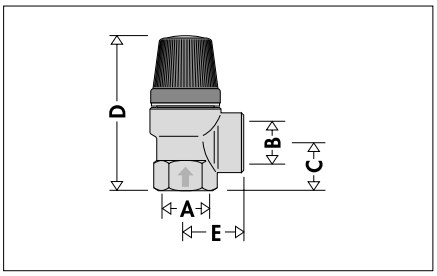

Code	A	B	C	D	E	Mass (kg)
3114..	1/2"	1/2"	19,5	65,5	25,5	0,13
3115..	3/4"	3/4"	24	74,5	27,5	0,21

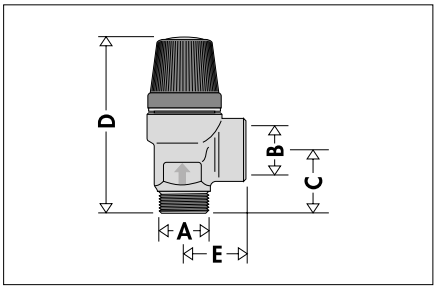

Code	A	B	C	D	E	Mass (kg)
3124..	1/2"	1/2"	23,5	69,5	25,5	0,13

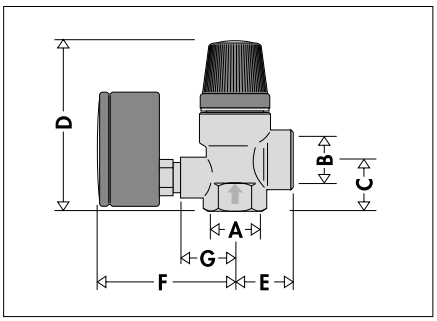

Code	A	B	C	D	E	F	G	Mass (kg)
3134..	1/2"	1/2"	21,5	72	25,5	61	24	0,24
3135..	3/4"	3/4"	24	74,5	27,5	61	24	0,29

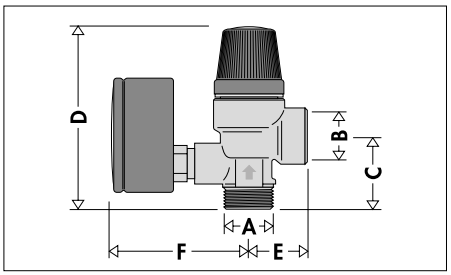

Code	A	B	C	D	E	F	Mass (kg)
3144..	1/2"	1/2"	32	78	25,5	61	0,24

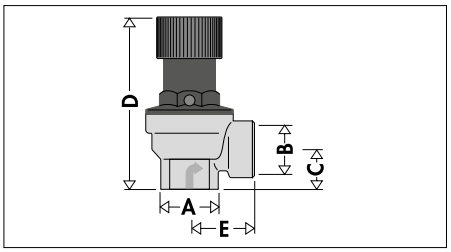

Code	A	B	C	D	E	Mass (kg)
5134..	1/2"	1/2"	19	78,5	29,5	0,18

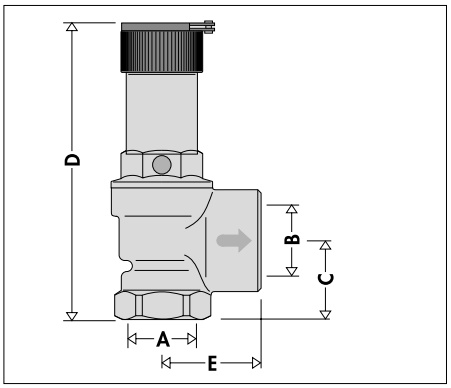

Code	A	B	C	D	E	Mass (kg)
5136..	1"	1 1/4"	38	144	48	0,85
5137..	1 1/4"	1 1/2"	44	187	57,5	2,1

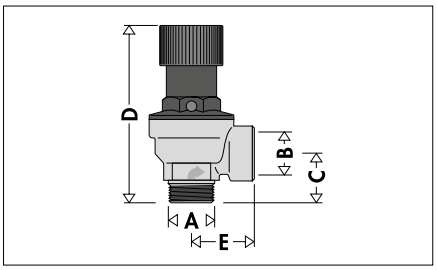

Code	A	B	C	D	E	Mass (kg)
5144..	1/2"	1/2"	23	81,5	29,5	0,18

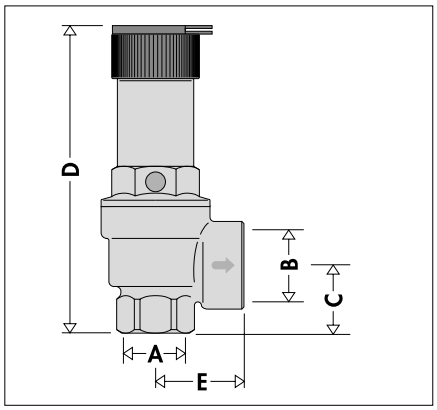

Code	A	B	C	D	E
5274.. EST	1/2"	3/4"	26	93	33
5275.. EST	3/4"	1"	30	136	39,5
5276.. EST	1"	1 1/4"	39	166	48
5277.. EST	1 1/4"	1 1/2"	42,5	185	56

Code completion

bar	• •	bar	• •	bar	• •
1	**10**	2.7	**27**	5.4	**54**
1.5	**15**	3	**30**	5.5	**55**
1.8	**28**	3.5	**35**	6	**60**
2	**20**	4	**40**	7	**70**
2.25	**22**	4.5	**45**	8	**80**
2.5	**25**	5	**50**	9	**90**

Safety relief valve for thermal systems, (527 EST series)

Functional details

Discharge overpressure <10 %
Full valve discharge flow rate should occur at pressure values PS < 1,1 · $P_{setting}$. This feature, combined with the special range of settings, allows the correct valve to be available as per the maximum working pressure value of the system or generator.

Closing differential <20 %
The valve must close within pressure values Pr >0,8 · $P_{setting}$. This feature allows minimizing the loss of water from the system if the valve is opened.

Positive safety
Valve performance is guaranteed even in the event of diaphragm deterioration or breakage.

Increased outlet diameter
This feature renders negligible the decrease in the discharge capacity or the change in behaviour on opening or closing due to the presence of the conveyance pipe.

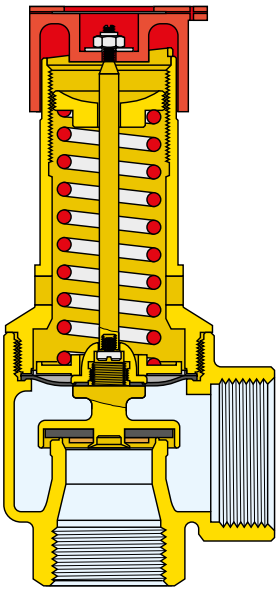

527 EST SERIES TECHNICAL SPECIFICATIONS

Size	Ø Outlet (mm)	Net cross section (cm²)	Setting press. (bar)	Nominal disch. press. (bar)	Closing press. (bar)	Outflow coeff. K	Discharge flow rate W (kg/h)	Maximum generator potential (kW)	(kcal/h)
1/2"	15	1,767	1	1,10	0,80	0,79	140,38	81,6	70.100
1/2"	15	1,767	1,50	1,65	1,20	0,79	175,73	102,1	87.800
1/2"	15	1,767	2	2,20	1,60	0,79	211,17	122,7	105.500
1/2"	15	1,767	2,25	2,475	1,80	0,79	226,39	131,6	113.100
1/2"	15	1,767	2,50	2,75	2,00	0,79	246,36	143,2	123.100
1/2"	15	1,767	2,70	2,97	2,16	0,79	261,76	152,2	130.800
1/2"	15	1,767	3	3,30	2,40	0,79	282,35	164,1	141.100
1/2"	15	1,767	3,50	3,85	2,80	0,79	318,09	184,9	159.000
1/2"	15	1,767	4	4,40	3,20	0,79	353,93	205,8	176.900
1/2"	15	1,767	4,50	4,95	3,60	0,79	386,60	224,8	193.200
1/2"	15	1,767	5	5,50	4,00	0,79	425,91	247,6	212.900
1/2"	15	1,767	5,40	5,94	4,32	0,79	456,89	265,6	228.400
1/2"	15	1,767	6	6,60	4,80	0,79	483,25	281,0	241.600
1/2"	15	1,767	7	7,70	5,60	0,79	558,42	324,7	279.200
1/2"	15	1,767	8	8,80	6,40	0,79	628,22	365,3	314.100
3/4"	20	3,1416	1	1,10	0,80	0,67	211,66	123,0	105.800
3/4"	20	3,1416	1,50	1,65	1,20	0,67	264,95	154,0	132.400
3/4"	20	3,1416	2	2,20	1,60	0,67	318,38	185,1	159.100
3/4"	20	3,1416	2,25	2,475	1,80	0,67	341,33	198,4	170.600
3/4"	20	3,1416	2,50	2,75	2,00	0,67	371,45	215,9	185.700
3/4"	20	3,1416	2,70	2,97	2,16	0,67	394,66	229,4	197.300
3/4"	20	3,1416	3	3,30	2,40	0,67	425,70	247,5	212.800
3/4"	20	3,1416	3,50	3,85	2,80	0,67	479,59	278,8	239.700
3/4"	20	3,1416	4	4,40	3,20	0,67	533,63	310,3	266.800
3/4"	20	3,1416	4,50	4,95	3,60	0,67	582,89	338,9	291.400
3/4"	20	3,1416	5	5,50	4,00	0,67	642,16	373,4	321.000
3/4"	20	3,1416	5,40	5,94	4,32	0,67	688,87	400,5	344.400
3/4"	20	3,1416	6	6,60	4,80	0,67	728,61	423,6	364.300
3/4"	20	3,1416	7	7,70	5,60	0,67	841,95	489,5	420.900
3/4"	20	3,1416	8	8,80	6,40	0,67	947,19	550,7	473.500
1"	25	4,9087	1	1,10	0,80	0,88	434,38	252,5	217.100
1"	25	4,9087	1,50	1,65	1,20	0,88	543,74	316,1	271.800
1"	25	4,9087	2	2,20	1,60	0,88	653,40	379,9	326.600
1"	25	4,9087	2,25	2,475	1,80	0,88	700,49	407,3	350.200
1"	25	4,9087	2,50	2,75	2,00	0,88	762,30	443,2	381.100
1"	25	4,9087	2,70	2,97	2,16	0,88	809,94	470,9	404.900
1"	25	4,9087	3	3,30	2,40	0,88	873,65	508,0	436.800
1"	25	4,9087	3,50	3,85	2,80	0,88	984,23	572,3	492.100
1"	25	4,9087	4	4,40	3,20	0,88	1095,13	636,8	547.500
1"	25	4,9087	4,50	4,95	3,60	0,88	1196,22	695,6	598.100
1"	25	4,9087	5	5,50	4,00	0,88	1317,87	766,3	658.900
1"	25	4,9087	5,40	5,94	4,32	0,88	1413,72	822,0	706.800
1"	25	4,9087	6	6,60	4,80	0,88	1495,28	869,5	747.600
1"	25	4,9087	7	7,70	5,60	0,88	1727,88	1004,7	863.900
1"	25	4,9087	8	8,80	6,40	0,88	1943,86	1130,3	971.900
1 1/4"	32	8,0424	1	1,10	0,80	0,74	598,47	348,0	299.200
1 1/4"	32	8,0424	1,50	1,65	1,20	0,74	749,13	435,6	374.500
1 1/4"	32	8,0424	2	2,20	1,60	0,74	900,22	523,4	450.100
1 1/4"	32	8,0424	2,25	2,475	1,80	0,74	965,10	561,2	482.500
1 1/4"	32	8,0424	2,50	2,75	2,00	0,74	1050,25	610,7	525.100
1 1/4"	32	8,0424	2,70	2,97	2,16	0,74	1115,89	648,8	557.900
1 1/4"	32	8,0424	3	3,30	2,40	0,74	1203,66	699,9	601.800
1 1/4"	32	8,0424	3,50	3,85	2,80	0,74	1356,02	788,5	678.000
1 1/4"	32	8,0424	4	4,40	3,20	0,74	1508,81	877,3	754.400
1 1/4"	32	8,0424	4,50	4,95	3,60	0,74	1648,09	958,3	824.000
1 1/4"	32	8,0424	5	5,50	4,00	0,74	1815,69	1055,8	907.800
1 1/4"	32	8,0424	5,40	5,94	4,32	0,74	1947,74	1132,6	973.800
1 1/4"	32	8,0424	6	6,60	4,80	0,74	2060,11	1197,9	1.030.000
1 1/4"	32	8,0424	7	7,70	5,60	0,74	2380,57	1384,3	1.190.200
1 1/4"	32	8,0424	8	8,80	6,40	0,74	2678,14	1557,3	1.339.000

Certification

CE Mark

The 527 series safety relief valves meet the requirements of Directive 2014/68/CE for pressurised equipment (also referred to as PED). They are therefore classified as category IV and are CE marked. Certificates and decisions issued by conformity assessment bodies under Directive 97/23/CE shall be valid under the Directive 2014/68/EU.



PASCAL

Consorzio Pascal Srl a socio unico
Organismo Notificato n. 1115
Via A. Bianchini, 13 - 20161 Milano ITALY
Tel. 02 4541 8101 - Fax 02 4541 8140
e-mail: info@consorziopascal.it

CERTIFICATO DI ESAME CE DEL TIPO
EC TYPE EXAMINATION CERTIFICATE
N. PA56 - 97/23/CE - B Rev. 4

Consorzio PASCAL s.r.l. a socio unico, quale Organismo Notificato n. 1115
Consorzio PASCAL s.r.l. a socio unico, acting as Notified Body n. 1115

ATTESTA
ATTESTS
che il progetto presentato da
that the design submitted by

FABBRICANTE / *MANUFACTURER*: CALEFFI S.p.A.
S.R. 229 n. 25 - 28010 Fontaneto D'Agogna (NO)

soddisfa le disposizioni dell'Allegato III, **Modulo B** della **Direttiva 97/23/CE**
*satisfy the requirements of Annex III, **Module B** of the Pressure Equipment **Directive 97/23/EC***

ATTREZZATURA / *EQUIPMENT*: VALVOLE DI SICUREZZA

Modelli coperti / *Covered models*: Serie 513 [¾", 1", 1¼"], 527 [½", ¾", 1", 1¼"], 527SOL [½"]
Fascicolo Tecnico / *Technical File*: 4031/14
L'elenco della documentazione tecnica rilevante è riportata in appendice A.
A list of the relevant technical documentation is summarized in appendix A.
Codice Progetto / *Design Code*: Metodo sperimentale
Rapporti di valutazione / *Evaluation Reports*: 046_RED_2014_06_05

LIMITI ESSENZIALI AMMISSIBILI / *ESSENTIAL ALLOWABLE LIMITS*

PS [bar g]	15
TS min/max [°C]	+5 / +110
Volume [L]/DN	Vedere app. B
Fluido / *Fluid*	Aria, acqua
Gruppo del Fluido / *Fluid Group*	2
Categoria di Rischio / *Risk Category*	IV

CONDIZIONI DI VALIDITA' / *VALIDITY TERMS AND CONDITIONS*

Tutte le modifiche al progetto approvato sono soggette ad ulteriore approvazione.
Il presente certificato deve ritenersi nullo ed il Fabbricante se ne assumerà tutte le conseguenze del suo indebito utilizzo, in caso di modifiche che influenzano la conformità ai requisiti essenziali di sicurezza o, in generale, se il Fabbricante non rispetta tutti e ciascuno degli obblighi a suo carico previsti dalla direttiva 97/23/CE, come recepita dalla legislazione nazionale vigente.
All the modifications to the approved design are subjected to further approval.
This certificate shall be deemed to be void an the Manufacturer shall alone bear any consequences pursuant to its use, in case of modifications where these may affect conformity to the essential safety requirements, and generally, where the Manufacturer fails to comply with each and every of his obligations under directive 97/23/CE as transposed in the applicable national laws.

Rev.	Descrizione / *Description*
4	Aggiunta nuove pressioni taratura / *Added new set pressures*
3	Rinnovo / *Renewal*
2	Aggiunta nuovi modelli / *Added new models*
1	Aggiunta nuovi modelli / *Added new models*
0	Emissione / *Emission*

La presente revisione annulla e sostituisce le precedenti – *This revision supersedes previous ones*

ACCREDIA
PRD N° 1385

Prima Emissione / *First issue*	Emissione corrente / *Current issue*	Data di Scadenza / *Expiring date*
14/05/2002	05/06/2014	13/05/2022

Il presente Certificato non è da ritenersi valido se non completo di tutte le sue pagine e può essere sospeso o revocato dall'Organismo Notificato nel caso di inadempienza del Fabbricante. L'autenticità e la validità del presente attestato può essere verificata contattando Consorzio PASCAL.
This Certificate is not valid without all its pages and can be suspended or withdrawn at any time in the event of manufacturer's non fulfilment. To verify autenticity and validity of this Certificate please contact Consorzio PASCAL.

Pagina / *Page* 1 di / *of* 3

IL PRESIDENTE / *PRESIDENT*
Consorzio PASCAL srl
Via A. Bianchini, 13 - 20161 Milano

Questo documento è di proprietà di Consorzio PASCAL – *Property of Consorzio PASCAL*
Mod. DES.00

Standard safety relief valves

The standard safety relief valves 311, 312, 313, 314, 513 and 514 series are used in heating systems, in domestic water systems to protect the hot water storage and in hydraulic systems.

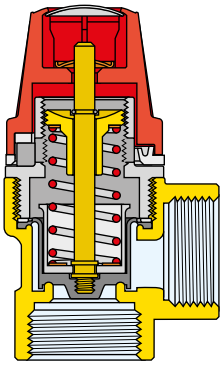

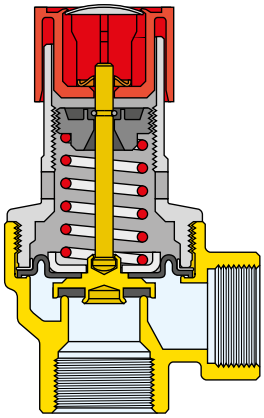

Heating systems

In compliance with Italian legislation, standard safety relief valves may be applied to heat generators with ratings lower than 35 kW.

311-312-313-314 SERIES TECHNICAL SPECIFICATIONS

Size	Ø Outlet mm	Cross Section net cm^2	Press. of setting (bar)	Nom. disch. press. (bar)	Press. of closing (bar)	Coeff. of outflow K	Flow rate of discharge (W) kg/h	Maximum potential of the generator kW	kcal/h
1/2"	13	1,327	1,5	1,80	1,2	0,5	88,49	51,3	44.200
1/2"	13	1,327	1,8	2,16	1,44	0,5	99,38	57,6	49.600
1/2"	13	1,327	2,50	3,00	2,00	0,5	124,44	72,3	62.200
1/2"	13	1,327	3	3,60	2,40	0,5	142,17	82,5	71.000
1/2"	13	1,327	3,50	4,20	2,80	0,5	161,39	93,6	80.600
1/2"	13	1,327	4	4,80	3,20	0,5	178,25	103,3	89.000
1/2"	13	1,327	5	6	4	0,5	213,32	123,7	106.400
1/2"	13	1,327	6	7,20	4,80	0,5	248,81	144,6	124.400
1/2"	13	1,327	7	8,40	5,60	0,5	284,35	165,2	142.100
1/2"	13	1,327	8	9,60	6,40	0,5	322,78	187,5	161.300
3/4"	13	1,327	2	2,40	1,60	0,5	106,63	61,8	53.300
3/4"	13	1,327	2,50	3,00	2,00	0,5	124,44	72,3	62.200
3/4"	13	1,327	3	3,60	2,40	0,5	142,17	82,5	71.000
3/4"	13	1,327	3,50	4,20	2,80	0,5	161,39	93,6	80.600
3/4"	13	1,327	4	4,80	3,20	0,5	178,25	103,3	89.000
3/4"	13	1,327	5	6,00	4,00	0,5	213,26	123,6	106.600
3/4"	13	1,327	5,5	6,60	4,4	0,5	234,23	135,9	116.900
3/4"	13	1,327	6	7,20	4,80	0,5	248,81	144,6	124.400
3/4"	13	1,327	7	8,40	5,60	0,5	284,35	165,2	142.100
3/4"	13	1,327	8	9,60	6,40	0,5	322,78	187,5	161.300
3/4"	13	1,327	9	10,80	7,2	0,5	364,20	211,2	181.700

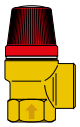

311415 1/2" 1,5 bar
311425 1/2" 2,5 bar
311430 1/2" 3 bar
311435 1/2" 3,5 bar
311440 1/2" 4 bar
311450 1/2" 5 bar
311460 1/2" 6 bar
311470 1/2" 7 bar
311480 1/2" 8 bar
311520 3/4" 2 bar
311525 3/4" 2,5 bar
311530 3/4" 3 bar
311535 3/4" 3,5 bar
311540 3/4" 4 bar
311550 3/4" 5 bar
311555 3/4" 5,5 bar
311560 3/4" 6 bar
311570 3/4" 7 bar
311580 3/4" 8 bar
311590 3/4" 9 bar

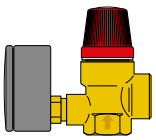

313425 1/2" 2,5 bar
313430 1/2" 3 bar
313460 1/2" 6 bar
313470 1/2" 7 bar
313480 1/2" 8 bar
313525 3/4" 2,5 bar
313530 3/4" 3 bar
313560 3/4" 6 bar
313570 3/4" 7 bar
313580 3/4" 8 bar

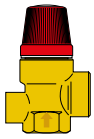

313432 1/2" 3 bar
313532 3/4" 3 bar

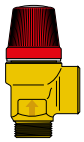

312428 1/2" 1,8 bar
312425 1/2" 2,5 bar
312430 1/2" 3 bar
312435 1/2" 3,5 bar
312440 1/2" 4 bar
312450 1/2" 5 bar
312460 1/2" 6 bar
312470 1/2" 7 bar
312480 1/2" 8 bar

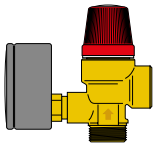

314425 1/2" 2,5 bar
314430 1/2" 3 bar
314460 1/2" 6 bar
314470 1/2" 7 bar
314480 1/2" 8 bar

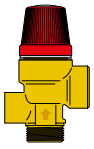

314432 1/2" 3 bar
314462 1/2" 6 bar

513-514 SERIES TECHNICAL SPECIFICATIONS

Size	Ø Outlet mm	Cross Section net cm^2	Press. of setting (bar)	Nom. disch. press. (bar)	Press. of closing (bar)	Coeff. of outflow K	Flow rate of discharge (W) kg/h	Maximum potential of the generator kW	kcal/h
1/2"	15	1,767	1,50	1,80	1,20	0,5	117,80	68,3	58.900
1/2"	15	1,767	2	2,40	1,60	0,5	141,99	82,3	70.900
1/2"	15	1,767	2,50	3,00	2,00	0,5	165,65	96,2	82.800
1/2"	15	1,767	3	3,60	2,40	0,5	189,32	110,0	94.600
1/2"	15	1,767	3,50	4,20	2,80	0,5	214,90	124,6	107.400
1/2"	15	1,767	4	4,80	3,20	0,5	237,35	137,6	118.600
1/2"	15	1,767	5	6	4	0,5	284,01	164,7	141.700
1/2"	15	1,767	6	7,20	4,80	0,5	331,31	192,5	165.600
1/2"	15	1,767	7	8,40	5,60	0,5	378,64	220,1	189.300
1/2"	15	1,767	8	9,60	6,40	0,5	429,81	249,8	214.900

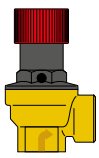

513415 1/2" 1,5 bar
513420 1/2" 2 bar
513425 1/2" 2,5 bar
513430 1/2" 3 bar
513435 1/2" 3,5 bar
513460 1/2" 6 bar
513470 1/2" 7 bar
513480 1/2" 8 bar

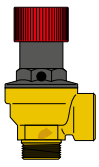

514420 1/2" 2 bar
514425 1/2" 2,5 bar
514430 1/2" 3 bar
514435 1/2" 3,5 bar
514440 1/2" 4 bar
514450 1/2" 5 bar
514460 1/2" 6 bar
514470 1/2" 7 bar
514480 1/2" 8 bar

Domestic water systems

513 and 514 series valves comply with the requirements of “Section R” for safety standards of equipment containing hot liquids under pressure (Italian legislation):
“in the case of water heaters intended for domestic use, the expansion system protecting the storage may consist of a discharge valve, with an outlet having a diameter, in mm, of not less than:

$$D_{min} = \sqrt{\frac{V}{5}}$$

where V is the volume of the heater in litres, with a minimum of 15 mm",

To illustrate the above, see the table with the hot water storage capacity limits for each type of valve.

513-514 SERIES TECHNICAL SPECIFICATIONS

Size	Ø Outlet mm	Net cross section cm²	Setting press. (bar)	Nom disch. press. (bar)	Closing press. (bar)	Boiler capacity l
1/2”	15	1,767	6	7,20	4,80	1.000
1/2”	15	1,767	7	8,40	5,60	1.000
1/2”	15	1,767	8	9,60	6,40	1.000
1”	25	4,9087	6	7,20	4,80	3.000
1”	25	4,9087	7	8,40	5,60	3.000
1”	25	4,9087	8	9,60	6,40	3.000
1”	25	4,9087	9	10,8	7,20	3.000
1 1/4”	32	8,0424	6	7,20	4,80	5.000
1 1/4”	32	8,0424	7	8,40	5,60	5.000
1 1/4”	32	8,0424	8	9,60	6,40	5.000

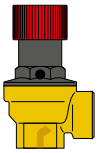

513460 1/2” 6 bar
513470 1/2” 7 bar
513480 1/2” 8 bar

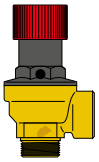

514460 1/2” 6 bar
514470 1/2” 7 bar
514480 1/2” 8 bar

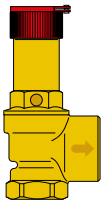

513660 1” 6 bar
513670 1” 7 bar
513680 1” 8 bar
513690 1” 9 bar
513760 1 1/4” 6 bar
513770 1 1/4” 7 bar
513780 1 1/4” 8 bar

Hydraulic systems

The safety relief valves can also be used for discharging cold water; in this case, the indicated discharge flow rates are the results of experimental testing, without the use of any conversion formula for fluids of different types.

513 SERIES TECHNICAL SPECIFICATIONS

Size	Ø Outlet mm	Net cross section cm²	Setting press. (bar)	Nom disch. press. (bar)	Closing press. (bar)	Discharge flow rate m³/h
1”	25	4,9087	1,5	1,80	1,20	7,6
1”	25	4,9087	2	2,40	1,60	8,0
1”	25	4,9087	2,50	3,00	2,00	8,3
1”	25	4,9087	3	3,60	2,40	8,7
1”	25	4,9087	3,50	4,20	2,80	9,1
1”	25	4,9087	4	4,80	3,20	9,4
1”	25	4,9087	5,5	6,60	4,40	10,4
1”	25	4,9087	6	7,20	4,80	10,5
1”	25	4,9087	7	8,40	5,60	11,5
1”	25	4,9087	8	9,60	6,40	12,3
1”	25	4,9087	9	10,80	7,20	12,9
1 1/4”	32	8,0424	2,50	3,00	2,00	13,2
1 1/4”	32	8,0424	3	3,60	2,40	13,8
1 1/4”	32	8,0424	3,50	4,20	2,80	14,1
1 1/4”	32	8,0424	6	7,20	4,80	17,5
1 1/4”	32	8,0424	7	8,40	5,60	18,6
1 1/4”	32	8,0424	8	9,60	6,40	19,4

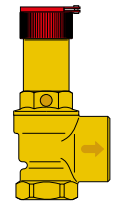

513615 1” 1.5 bar
513620 1” 2 bar
513625 1” 2.5 bar
513630 1” 3 bar
513635 1” 3.5 bar
513640 1” 4 bar
513655 1” 5.5 bar
513660 1” 6 bar
513670 1” 7 bar
513680 1” 8 bar
513690 1” 9 bar
513725 1 1/4” 2.5 bar
513730 1 1/4” 3 bar
513735 1 1/4” 3.5 bar
513760 1 1/4” 6 bar
513770 1 1/4” 7 bar
513780 1 1/4” 8 bar

Certification

CE Mark
The 311, 312, 313, 314, 513 and 514 series safety relief valves meet the requirements of Directive 2014/68/EU for pressurised equipment (also referred to as PED). They are therefore classified as category IV and are CE marked.


ATTESTATO DI ESAME CE DEL TIPO


ATTESTATO DI ESAME CE DEL TIPO

Installation

Before installing a safety relief valve, it must be correctly sized by qualified technical personnel in accordance with the current regulations governing the specific applications. Any use other than the intended use is prohibited.
Safety relief valves must be installed by competent technical personnel qualified in accordance with current legislation.

The safety relief valve must be installed in line with the flow direction indicated by the arrow on the valve body.

Heating system

The safety relief valves must be installed on the top of the generator or on the flow pipe no more than one metre from the generator (Section R). The connecting pipework between the safety relief valve and the generator must not be interrupted.

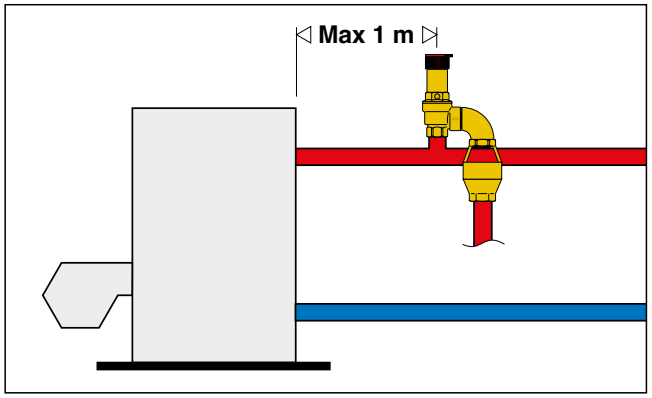

Hydraulic and domestic water system

Safety relief valves must be installed close to the hot water storage, taking care not to fit any shut-off devices between the valve and the storage.

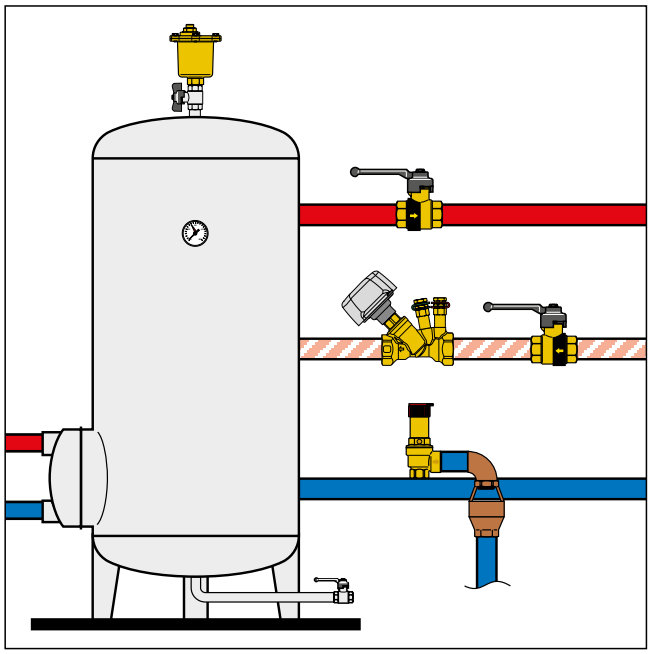

Mounting

Safety relief valves can be fitted vertically or horizontally, but not upside down.
This prevents deposits of impurities from affecting correct functioning.

Correct installation

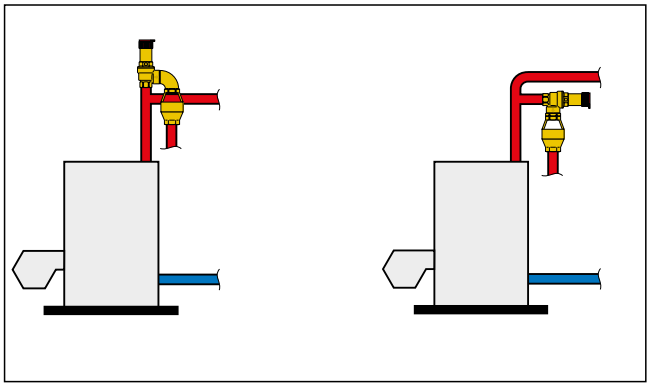

Incorrect installation

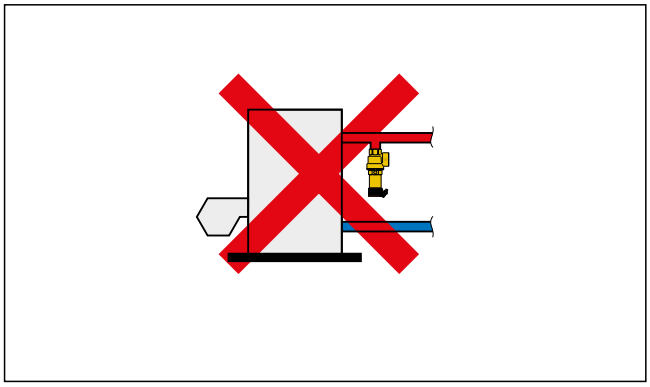

Discharge pipework

The discharge pipework from the safety relief valve must be fitted in such a way as not to prevent the correct operation of the valve and not to cause damage or injury.
In accordance with current legislation, the safety relief valve discharge must be visible and carried in suitable collection pipework.
As shown in the diagrams, it is advisable to install a tundish directly in the discharge pipework for low capacity valves, as diagram 1.
In the case of larger capacities, proceed as shown in diagram 2.

Diagram 1

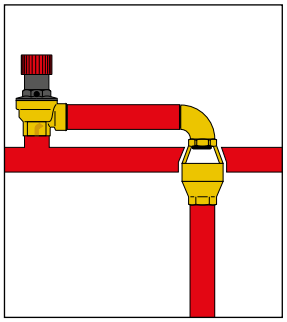

Diagram 2

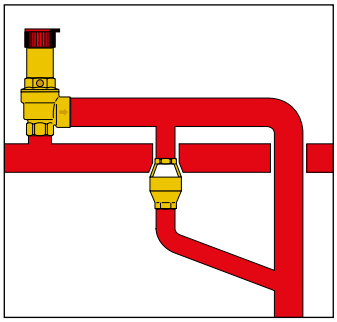

SPECIFICATION SUMMARY

311 series
Certified, standard membrane safety relief valve. Bearing CE mark as per Directive 2014/68/EU. Threaded connections 1/2" F x 1/2" F (and 3/4" x 3/4"). Available setting values: 1,5 - 2 - 2,5 - 3 - 3,5 - 4 - 5 - 5,5 - 6 - 7 - 8 - 9, 1,5 bar only for 1/2", 2 - 5,5 - 9 bar only for 3/4"). Maximum working temperature 110 °C. Brass body. Diaphragm and seal in EPDM. ABS knob.Opening overpressure 20 %, closing differential 20 %.

312 series
Certified standard membrane safety relief valve. Bearing CE mark as per Directive 2014/68/EU. Threaded connections 1/2" M x 1/2" F. Available setting values: 1,8 - 2,5 - 3 - 3,5 - 4 - 6 - 7 - 8. Maximum working temperature 110 °C. Brass body. Diaphragm and seal in EPDM. ABS control knob. Opening overpressure 20 %, closing differential 20 %.

313 series
Certified standard membrane safety relief valve with pressure gauge connection. Bearing CE mark as per Directive 2014/68/EU. Threaded connections 1/2" F x 1/2" F (1/2" and 3/4"). Available setting values: 3 bar. Maximum working temperature 110 °C. Brass body. Diaphragm and seal in EPDM. ABS control knob. Opening overpressure 20 %, closing differential 20 %.

313 series
Certified standard membrane safety relief valve with pressure gauge. Bearing CE mark as per Directive 2014/68/EU. Threaded connections 1/2" M x 1/2" F. Available setting values: 3 bar. Maximum working temperature 110 °C. Brass body. Diaphragm and seal in EPDM. ABS control knob. Opening overpressure 20 %, closing differential 20 %.

314 series
Certified standard membrane safety relief valve with pressure gauge connection. Bearing CE mark as per Directive 2014/68/EU. Threaded connections 1/2" F x 1/2" F (1/2" and 3/4"). Available setting values: 2,5 - 3 - 6 - 7 - 8 bar. Maximum working temperature 110 °C. Brass body. Diaphragm and seal in EPDM. ABS control knob. Opening overpressure 20 %, closing differential 20 %.

314 series
Certified standard membrane safety relief valve with pressure gauge. Bearing CE mark as per Directive 97/23/EC. Threaded connections 1/2" M x 1/2" F. Available setting values: 2,5 - 3 - 6 - 7 - 8 bar. Maximum working temperature 110 °C. Brass body. Diaphragm and seal in EPDM. ABS control knob.

513 series
Certified standard membrane safety relief valve. Bearing CE mark as per Directive 2014/68/EU. Threaded connections 1/2" M x 1/2" F. Available setting values: 1,5 - 2 - 2,5 - 3 - 3,5 - 6 - 7 - 8 bar. Maximum working temperature 110 °C. Brass body. Diaphragm and seal in EPDM. Knob and control knob in glass-fibre reinforced nylon.

513 series
Certified standard membrane safety relief valve. Bearing CE mark as per Directive 2014/68/EU. Connections 1" F x 1 1/4" F (1" x 1 1/4" and 1 1/4" x 1 1/2"). Available setting values: 1,5 - 2 - 2,5 - 3 - 3,5 - 6 - 7 - 8 - 9 bar (1,5 - 2 bar only 1/2" and 1")(4 - 5,5 - 9 bar only 1"). Maximum working temperature 110 °C. Brass body and cover. Diaphragm and seal in EPDM. Knob and control knob in glass-fibre reinforced nylon.

514 series
Certified standard membrane safety relief valve. Bearing CE mark as per Directive 2014/68/EU. Connections 1/2" M x 1/2" F. Available setting values: 2 - 2,5 - 3 - 3,5 - 4 - 5 - 6 - 7 - 8 bar. Maximum working temperature 110 °C. Brass body. Diaphragm and seal in EPDM. Cover in glass-fibre reinforced nylon, control knob in ABS.

527 EST Series
Certified standard membrane safety relief valve. Bearing CE mark as per Directive 2014/68/EU. Connections 1/2" F x 3/4" F (available 1/2" x 3/4", 3/4" x 1", 1" x 1 1/4", 1 1/4" x 1 1/2"). Available setting values: 1 - 1,5 - 2 - 2,25 - 2,5 - 2,7 - 3 - 3,5 - 4 - 4,5 - 5 - 5,4 - 6 - 7 - 8 bar. Maximum working temperature 110 °C. Brass body and cover. Diaphragm and seal in EPDM. Knob and control knob in glass-fibre reinforced nylon. Opening overpressure 10 %, closing differential 20 %. Fail-safe. Accompanied by bench calibration report.

Accessories



5521
Tundish with adjustable elbow connection, male-female.

Sizes: 1/2”, 3/4”, 1”, 1 1/4”.



5520
Discharge tundish, female-female.
Sizes: 3/4” and 1 1/4”.



5520
Pre-formed special tundish.
Bowl-type.
Made of painted sheet steel.
Size: 1 1/2”.

Dimensions

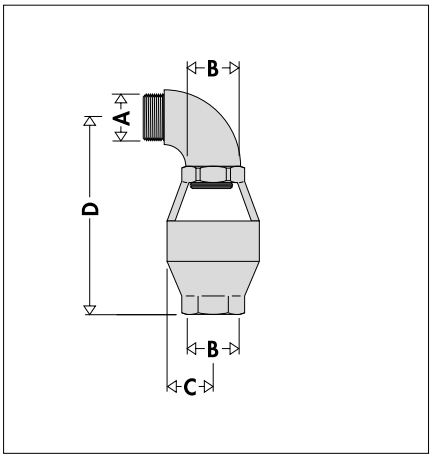

Code	A	B	C	D
552140	1/2”	3/4”	25	125
552150	3/4”	1”	25	125
552160	1”	1 1/4”	40	180
552170	1 1/4”	1 1/2”	40	180

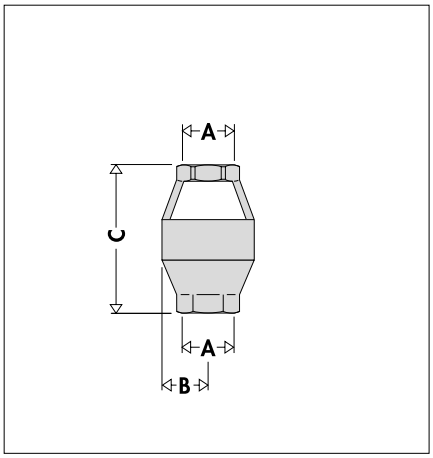

Code	A	B	C
552050	3/4”	25	96
552070	1 1/4”	40	134

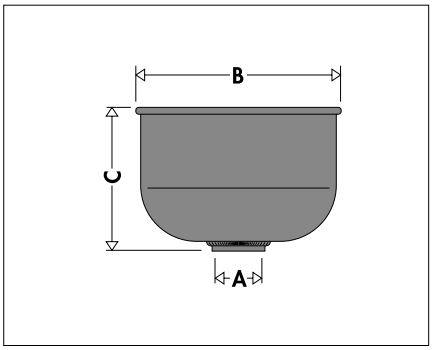

Code	A	B	C
552080	1 1/2”	210	150

SPECIFICATION SUMMARY

5521 series
Tundish with adjustable elbow connection. Connections 1/2” M x 3/4” F (1/2” x 3/4”, 3/4” x 3/4”, 1” x 1 1/4”, 1 1/4” x 1 1/4”). Die-cast aluminium body. Visible discharge.

5520 series
Straight discharge tundish. Connections 3/4” F x 3/4” F (3/4” x 3/4” and 1 1/4” x 1 1/4”). Die-cast aluminium body. Visible discharge.

5520 series
Pre-formed special tundish Connection 1 1/2” F. Body in coated sheet metal

We reserve the right to make changes and improvements to our products and the related technical data in this publication, at any time and without prior notice.

CALEFFI Hydronic Solutions

Caleffi S.p.A.
S.R. 229 n. 25 · 28010 Fontaneto d’Agogna (NO) · Italy
Tel. +39 0322 8491 · Fax +39 0322 863723
info@caleffi.it · www.caleffi.it
© Copyright 2020 Caleffi