Signal lights / Rotating Beacon

Rotating Mirror Beacon LED 115-230VAC RD



Part No.: 885.140.60

MECHANICAL DATA

Height	200 mm
Diameter	98 mm
Materials	PC PC/ABS
Dome colour	Red
Housing colour	Black
Protection category	IP65
Connection	Screw terminals
cross-sectional area maximum	1,50mm² / 16AWG
Cable entry	Through hole
Cable entry minimum	d = 5 mm
Cable entry maximum	d = 7 mm
Type of fixing	Tube mounting
Working temperature minimum	-30°C
Working temperature maximum	+50°C
Weight with packaging	422 g
Product weight	353 g

ELECTRICAL DATA

Operating voltage	115-230V
Operating voltage type	AC
Operating voltage frequency	50Hz
Operating voltage tolerance	+/- 10%
Rated operational voltage	115/230 VAC
Rated operational current	65 mA
Rated inrush current	>10A
Protection class	Protection class 2
Pollution degree	3
Overvoltage category	II
Isolation voltage	Ui = 250V; Uimp = 2.500V

OPTICAL DATA

Light source	LED
Light colour	Red
Optical signal image	Revolving
Service life optical	50,000 h maximum
Rotation speed (rpm)	180 U/min

APPROVAL DATA

! For additional installation and mounting information, refer to the appropriate user guide at www.werma.com. This printed copy is for information only and is subject to alteration.

Signal lights / Rotating Beacon

Rotating Mirror Beacon LED 115-230VAC RD

Conforms with CE	Yes
WEEE	Yes
Conforms with RED directive	No
Conforms with ATEX-directive	No
Conforms with CCC-Ex	No
Conforms with CCC	Yes
Conforms with UL	No
Conforms with FCC	No
Conforms with IC	No
EAC certificate available	Yes
Conforms with UKCA (Importer)	Yes (WERMA (UK) Ltd.)
Conforms with CMIM	No
Conforms with AS-I	No
Conforms with DNV	No
Conforms with RoHS CN	No
Conforms with VdS	No

! For additional installation and mounting information, refer to the appropriate user guide at www.werma.com. This printed copy is for information only and is subject to alteration.

Signal lights / Rotating Beacon

Rotating Mirror Beacon LED 115-230VAC RD

DRAWING

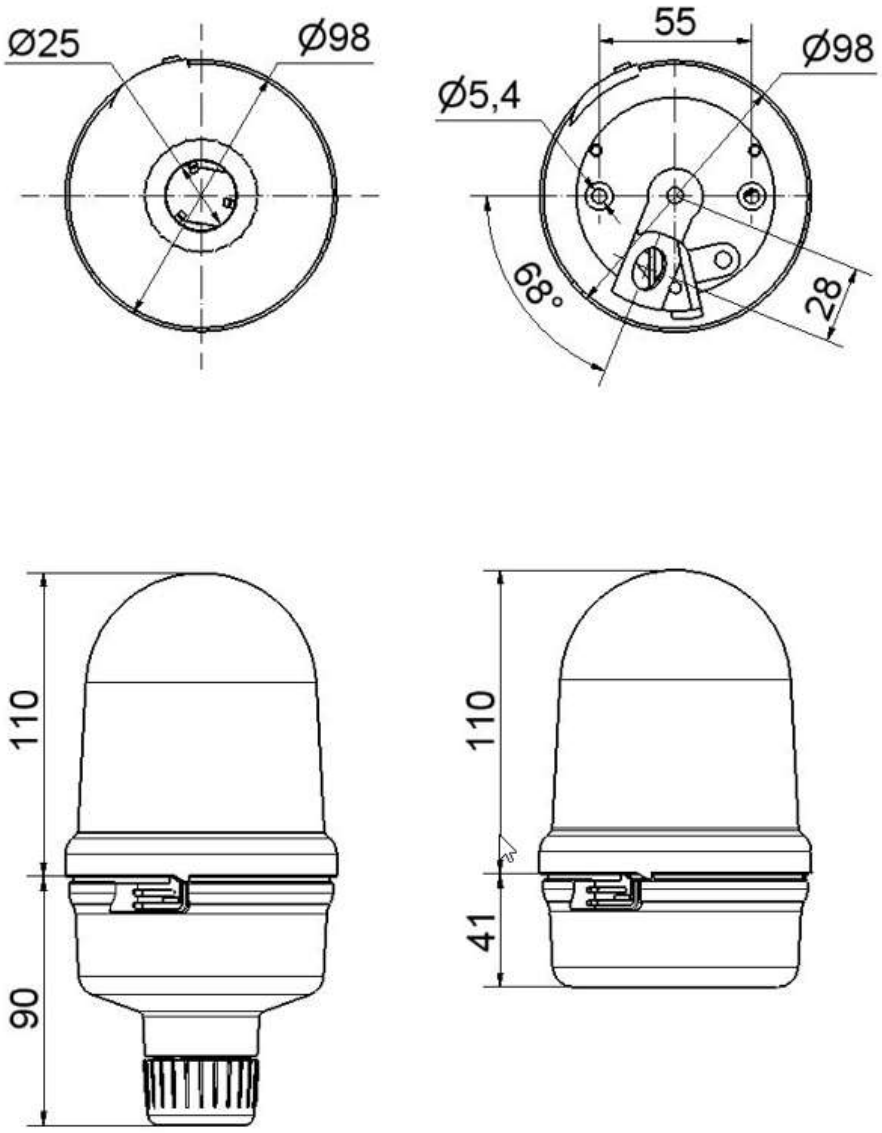

! For additional installation and mounting information, refer to the appropriate user guide at www.werma.com. This printed copy is for information only and is subject to alteration.