E1001A

Wirable socket

SDOGL070PLNFKPG/1D/1G

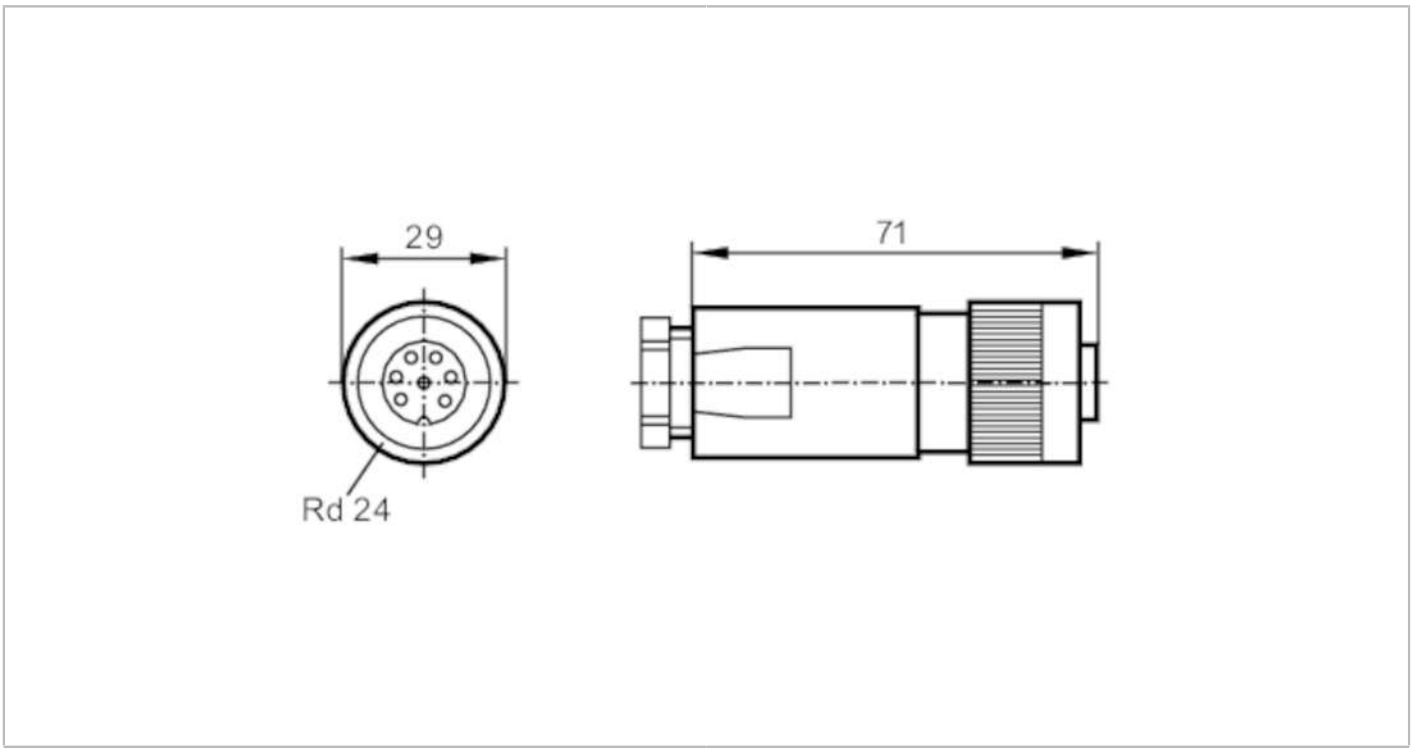

CE

Application		
Special feature		Gold-plated contacts
Application		connection to certified intrinsically safe circuits
Operating conditions		
Ambient temperature	[°C]	-20...80
Protection		IP 67
Tests / approvals		
Approval		BVS 05 ATEX E106
ATEX marking		Ex II 1G Ex ia IIC T6 Ga
		Ex II 1D Ex ia IIIB T85°C Da
		Ex II 1D Ex ia IIIC T85°C Da
Mechanical data		
Weight	[g]	59.1
Dimensions	[mm]	29 x 29 x 71
Materials		PBT
Moulded-body material		PBT
Material nut		PA
Remarks		
Remarks		Ta according to table "Total power of the current circuits" in the corresponding operating instructions (safety-related part ATEX)
		Several intrinsically safe circuits may be connected to the sockets.
		The sum of the voltages of one or more intrinsically safe circuits must not exceed the following value:
		Utotal max = 60 V (peak value)

E1001A

Wirable socket

SDOGL070PLNFKPG/1D/1G

Pack quantity	1 pcs.

Electrical connection

terminals: ...2.5 mm²; Cable sheath: Ø 10...12 mm

Electrical connection - socket

Connector: 1 x Rd24, straight; coding: A; Moulded body: PBT; Locking: PA; Contacts: gold-plated

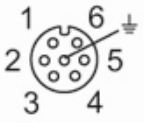

Connection

