

Tempatron Tel: +44(0)1621 859500 Fax: +44(0)1621 855335

Temperature & Humidity Sensors

Models Available

DPWT Wall Mounting Temperature Sensor
DPWC Wall Mounting Temperature & Humidity Sensor
DPDT Duct Mounting Temperature Sensor
DPDC Duct Mounting Temperature & Humidity Sensor
DPPT Industrial Environment Temperature Sensor
DPPC Industrial Environment Temperature & Humidity Sensor

Product Features

- Temperature range from -20 to +70°C
- Humidity range from 0-100% rH
- 0-1V & 4-20mA or 0-10Vdc output
- 8* to 30Vdc or 12 to 24Vac powered
- Duct or industrial sensors IP55
- Wall sensors IP30

The Tempatron DP series temperature and humidity sensors are designed for sensing temperature and humidity in commercial and industrial applications. Temperature only versions are available as well as combined temperature and humidity versions.

The sensors are available in wall mounting, duct mounting and industrial environment wall mounting enclosures and have either a selectable 0-1Vdc & 4-20mA output or a 0-10Vdc output.

These high accuracy sensors have an enclosure code of up to IP55 and are powered from 8* to 30Vdc or 12 to 24Vac.

*18 for the 0-10Vdc output versions.

Temperature & humidity sensors for commercial and industrial applications

Dimensions

DPW WALL MOUNTING

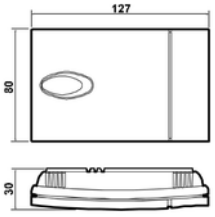

Wall mounting hole centres 83mm

DPD DUCT MOUNTING

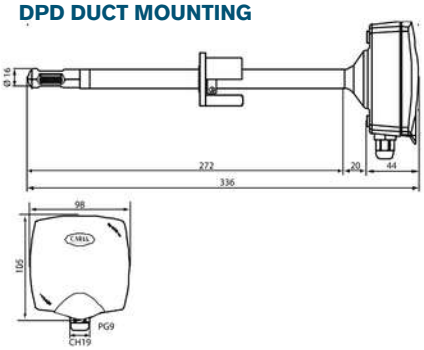

DPP INDUSTRIAL WALL MOUNTING



All dimensions in mm

Connections

DPxxxx0xxx

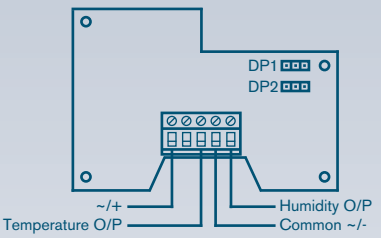

DP1 ON, DP2 OFF: -0.5 to 1V
DP1 OFF, DP2 OFF: 0 to 1V
R min. 1kohm
DP1 OFF, DP2 ON: 4 to 20mA R max. 100ohm

On models with 2 outputs jumpers must be configured in the same way

DPxxxx1xxx

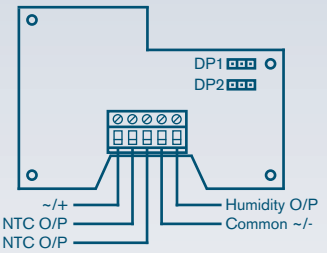

DP1 ON, DP2 OFF: -0.5 to 1V
DP1 OFF, DP2 OFF: 0 to 1V
R min. 1kohm
DP1 OFF, DP2 ON: 4 to 20mA R max. 100ohm

On models with 2 outputs jumpers must be configured in the same way

DPxxxx2xxx

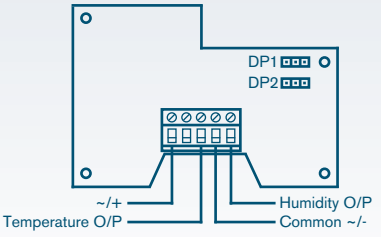

DP1 ON, DP2 ON: 0 to 10V R min. 1kohm

Ordering information

Model	Code	Description
	DPW	Wall Mounting Sensor
	DPD	Duct Mounting Sensor
	DPP	Industrial Environment Wall Mounting Sensor

Input	Code	Description
	T	Temperature Only
	C	Temperature and Humidity

Humidity Input	Code	Description
	0	N/A
	1	10-90% rH
	2	0-100% rH (N/A for DPWC)

Temperature Input	Code	Description
	0	N/A
	1	NTC

Output	Code	Description
	0000	0-1Vdc or 4-20mA
	1000	0-1Vdc or 4-20mA & NTC Resistive Output
	2000	0-10Vdc

Example	DPDC111000

Specification

Power Supply Voltage:
- 8* to 30Vdc (±15%)
  *18 for the 0-10Vdc output
- 12 to 24Vac (-10/+15%)

Frequency:
- 50/60Hz

Temperature Accuracy:
- NTC:
  ±0.25% at 25°C, ±1.2% 0 to 50°C
- 0 to 50°C:
  ±0.4% at 25°C, ±1.2% 0 to 50°C
- -10 to 70°C:
  ±0.2% at 25°C, ±0.7% -10 to 70°C

Humidity Accuracy:
- 10-90%rH:
  ±3% at 25°C, ±6% 0 to 50°C
- 0-100%rH:
  ±3% at 25°C, ±5% -10 to 70°C

Temperature Output:
- 10mV/°C or 4-20mA for -30 to +70 °C
- 100mV/°C for 0-10Vdc output

Humidity Output:
- 10mV/%rH or 4-20mA for 0 to 100%rH
- 100mV/%rH for 0-10Vdc output

Operating Range:
- DPWT: -10 to 60°C
- DPDT/DPPT: -20 to 70°C
- DPWC: -10 to 60°C, 10-90% rH
- DPDC1: -10 to 60°C, 10-90% rH
- DPPC1: -10 to 60°C, 10-90% rH
- DPDC2: -20 to 70°C, 0-100% rH
- DPPC2: -20 to 70°C, 0-100% rH

Storage Temperature:
- -20°C to 70°C
- 10-90% rH (non-condensing)

Enclosure Code:
- DPW: IP30
- DPD: IP55
- DPP: IP55

Weight:
- DPW: 200g
- DPD: 450g
- DPP: 300g

Markings:
- CE marked (meets EN61010-1 low voltage and EN50081-1/50082-1 EMC directives)

Specification subject to change without notice.

Tempatron: Eltime House, Hall Road, Maldon, Essex, CM9 4NF UK.

TEMPATRON

Tempatron Industrial Controls is a division of Eltime Ltd.

© Eltime Ltd. Tempatron Temperature & Humidity Sensors 09/2016