Bottom View of Assembly

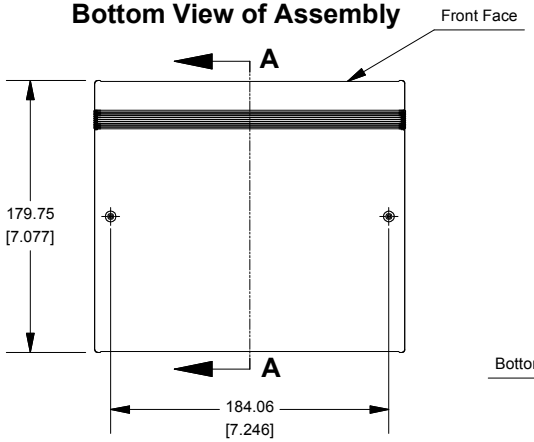

SECTION A-A
(Side View Inside Assembly)

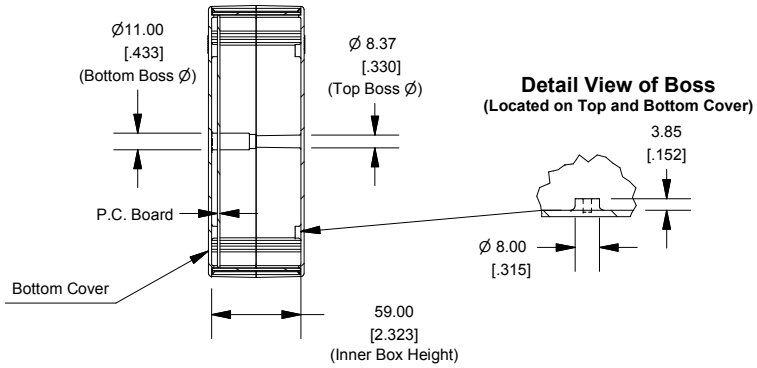

Detail View of Boss
(Located on Top and Bottom Cover)

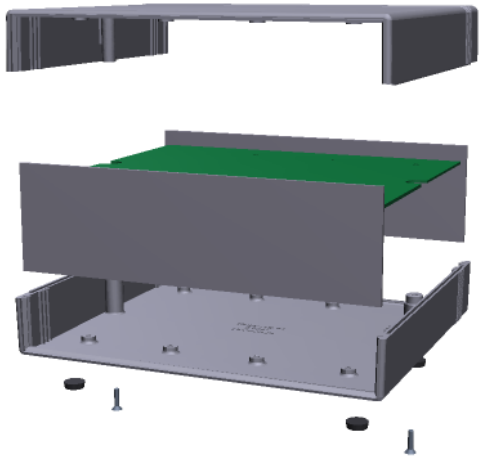

End View of Assembly

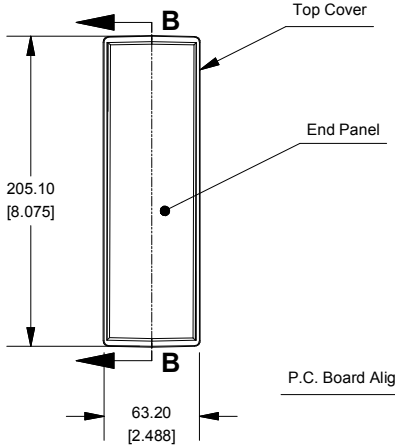

SECTION B-B
(Inside of Bottom Cover)

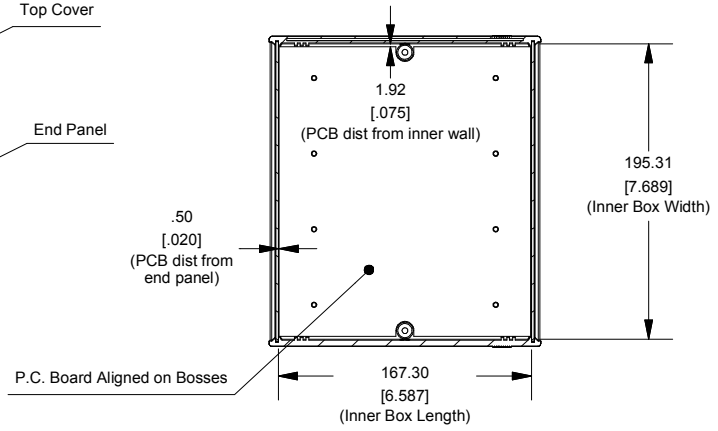

Front/Rear Panel
(Dashed Line Indicates Viewing Area)

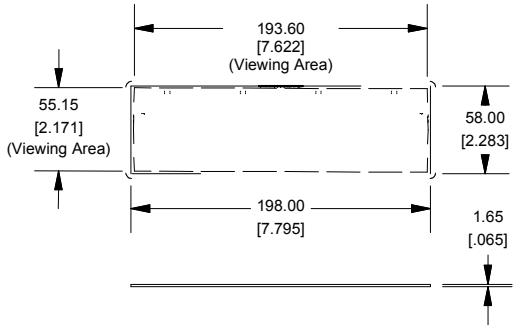

Maximum P.C. Board Size

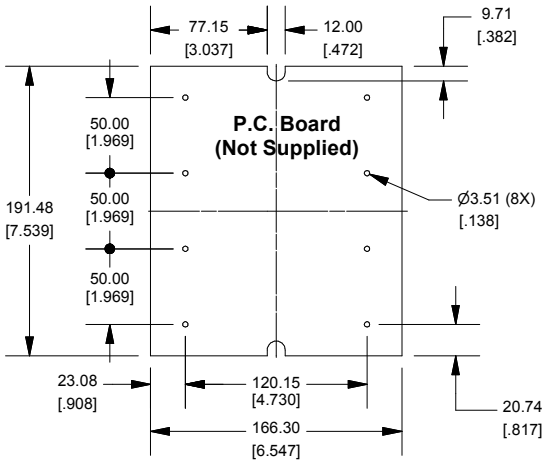

Enclosures can be Factory Modified (Milling, Drilling, Printing etc.)
Solid models of this enclosure available in STEP or IGES.
Contact Factory mjm@hammondmfg.com

NOTE
Purchased Assembly includes top and bottom cover, front and end aluminum panels (alloy 5052-H32, SPV coating on one side), 2 cover screws, and 4 rubber feet.

1598D Instrument Case	
FLAME RETARDANT ABS (UL94-VO)	
Black Enclosure with Aluminum Panels	1598DBK
Grey Enclosure with Aluminum Panels	1598DGY
Black EMI/RFI Shielded	1598RDBK
NON-FLAME RETARDANT GPABS (UL94-HB)	
Grey Enclosure with Aluminum Panels	1598DSGY
Grey Enclosure with Black Plastic Panels	1598DSGYPBK
ACCESSORIES	
Black Plastic Panels	1598PLDBK
Rubber Feet (Pkg 24)	1421T2
For 1598 FR-ABS *Cover Screws (Pkg 100) [M3 - 0.5 x 10mm]*	1591MS100
For 1598 GPABS *Cover Screws (Pkg 100) [#4 x 5/8" (15.9mm)]*	1591TS100
For Both Models *PCB Screws (Pkg 100) [#6 x 1/4" (6.4mm)]*	1598ATS100

HAMMOND MANUFACTURING™

1598D

www.hammondmfg.com