NU • TECH Engineering









Levelling Feet & Threaded Inserts

General Overview

Nu-Tech was formed in 1985 and become one of the UK's leading manufacturer of industrial levelling feet.

Nu-Tech manufacturers an extensive range of adjustable levelling feet and machine mounts in a wide range of styles materials and sizes to suit most applications. Stainless steel mounts are available in a variety of forms such as articulating, fixed stud, bolt-down, plain base anti-vibration and vibration dampening.

The levelling feet are ideal for manufacturers of equipment operating in the chemical, dairy, food processing, pharmaceutical, marine, plastics, textile industries, as well as the access ramp/platform markets.

To complement the levelling feet Nu-Tech produces a range of threaded inserts in both press fit and weldable forms.

For specific mounting requirements, Nu-Tech offer a full design to manufacture service, to provide a cost effective solution to most mounting applications.

Index

Range	*Description*
A040	Mild Steel Stud/Plastic Base Levelling Foot Up to M12
A045	Stainless Steel Stud/Plastic Base Levelling Foot up to M12
A090	Mild Steel Stud/Plastic Base Levelling Foot - from M12
A095	Stainless Steel Stud/Plastic Base Levelling Foot - from M12
A190	Mild Steel Stud/Bolt Down Plastic Base Levelling Foot
A195	Stainless Steel Stud/Bolt Down Plastic Base Levelling Foot
A070	Mild Steel Levelling Foot
A210	Mild Steel Bolt Down Levelling Foot
A080	Stainless Steel Levelling Foot
A200	Stainless Steel Bolt Down Levelling Foot
A085	316 Stainless Steel Levelling Foot
A087	Low Profile Stainless Steel Levelling Foot
A089	Hygienic Low Profile Stainless Steel Levelling Foot
A105	Vibration Dampening Machine Mount
A125	Hygienic Vibration Dampening Machine Mount
A205	Down Base Vibration Dampening Machine Mount
A300	Light Duty Low Profile Fixed stud Levelling Feet
A315	Heavy Duty Low Profile Fixed stud Levelling Feet
A400	Anti Vibration Machine Mounts
A020	Threaded Insert with Brass Bush
A021	Threaded Insert with Stainless Steel Bush
A025	Weldable Threaded Insert

PRODUCT SPECIFICATION SHEET

A040/... *Plastic Base/Mild Steel Stud Levelling Foot Range*



Materials...

Stud: - *Mild Steel, Bright Zinc Plated*

Base: - *Polyamide Reinforced Nylon*

Part number	Thread Size D1(mm)	Thread Length L(mm)	Base Diameter D2(mm)	Overall Height H(mm)	Max Load (Kg)
A040/001	M6	20	40	41	300
A040/009	M6	20	50	43	300
A040/138	M6	25	40	46	300
A040/002	M6	40	40	61	300
A040/010	M6	40	50	63	300
A040/003	M8	25	40	46	450
A040/011	M8	25	50	48	450
A040/004	M8	40	40	61	450
A040/012	M8	40	50	63	450
A040/005	M8	60	40	81	450
A040/013	M8	60	50	83	450
A040/006	M10	38	40	59	500
A040/014	M10	38	50	61	500
A040/007	M10	60	40	81	500
A040/015	M10	60	50	83	500
A040/008	M10	75	40	96	500
A040/016	M10	75	50	98	500
A040/025	M10	100	50	123	500
A040/021	M12	50	40	73	600
A040/017	M12	50	50	75	600
A040/050	M12	57	40	80	600
A040/022	M12	75	40	98	600
A040/018	M12	75	50	100	600
A040/023	M12	100	40	123	600
A040/019	M12	100	50	125	600
A040/024	M12	125	40	148	600
A040/020	M12	125	50	150	600

Dimensions are approximate

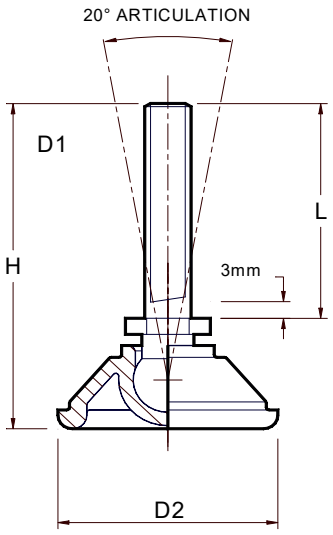

Specials:

Stud sizes not listed above can be manufactured as Specials.

For further informationPlease Contact the office or Email :- sales@nutech-eng.com

PRODUCT SPECIFICATION SHEET

A045/... *Plastic Base/Stainless Steel Stud Levelling Foot Range*



Materials... **Stud: -** *Stainless Steel type 303*

Base: - *Polyamide Reinforced Nylon*

Part number	Thread Size D1(mm)	Thread Length L(mm)	Base Diameter D2(mm)	Overall Height H(mm)	Max Load (Kg)
A045/001	M6	20	40	41	300
A045/009	M6	20	50	43	300
A045/002	M6	40	40	61	300
A045/010	M6	40	50	63	300
A045/032	M6	60	40	81	300
A045/003	M8	25	40	46	450
A045/011	M8	25	50	48	450
A045/140	M8	30	40	51	450
A045/004	M8	40	40	61	450
A045/012	M8	40	50	63	450
A045/005	M8	60	40	81	450
A045/013	M8	60	50	83	450
A045/006	M10	38	40	59	500
A045/014	M10	38	50	61	500
A045/007	M10	60	40	81	500
A045/015	M10	60	50	83	500
A045/008	M10	75	40	96	500
A045/016	M10	75	50	98	500
A045/054	M10	100	40	121	500
A045/021	M12	50	40	73	600
A045/017	M12	50	50	75	600
A045/022	M12	75	40	98	600
A045/018	M12	75	50	100	600
A045/023	M12	100	40	123	600
A045/019	M12	100	50	125	600
A045/024	M12	125	40	148	600
A045/020	M12	125	50	150	600
A045/027	M12	160	50	185	600

Dimensions are approximate

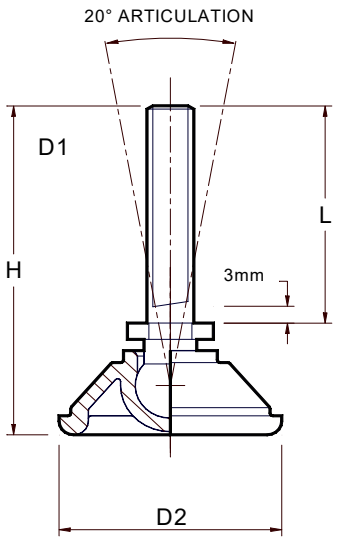

Specials:

Stud sizes not listed above can be manufactured as Specials.

For further information Please Contact the office or Email :- sales@nutech-eng.com

PRODUCT SPECIFICATION SHEET

A090/... *Plastic Base/Mild Steel Plated Stud Levelling Foot Range*



Materials...

Stud: - *Mild Steel, Electroless Nickel Plated*
Base: - *Polyamide Reinforced Nylon*

Part number	Thread Size D1(mm)	Thread Length L(mm)	Base Diameter D2(mm)	Overall Height H(mm)	Max Load (Kg)
A090/020	M12	75	55	102	750
A090/075	M12	100	55	127	750
A090/021	M12	125	55	152	750
A090/022	M12	150	55	177	750
A090/010	M12	75	70	108	1000
A090/011	M12	125	70	158	1000
A090/006	M12	150	70	183	1000
A090/005	M16	75	70	111	1500
A090/023	M16	125	70	161	1500
A090/001	M16	150	70	186	1500
A090/004	M16	200	70	236	1500
A090/013	M16	75	100	119	2000
A090/018	M16	100	100	144	2000
A090/034	M16	125	100	169	2000
A090/014	M16	150	100	194	2000
A090/015	M16	200	100	244	2000
A090/127	M20	55	100	105	2000
A090/038	M20	125	100	175	2000
A090/003	M20	150	100	200	2000
A090/009	M20	170	100	220	2000
A090/002	M20	200	100	250	2000
A090/076	M20	250	100	300	2000
A090/007	M24	150	100	204	2000
A090/016	M24	200	100	254	2000
A090/037	M24	250	100	304	2000

Dimensions are approximate

Bolt Down Base also Availiable - See A190... Sht

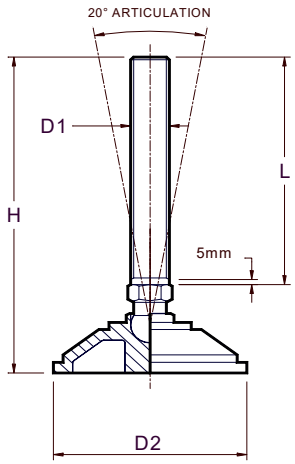

Registered Design

Options Availiable

The following options are availiable on all popular sizes :-

Non-Slip Pad:
Nitrile rubber pad (3mm thick) bonded to the Base.

Vibetech Pad:
Vibration dampening Vibetech pad (6/13mm thick) bonded to the base

(For full details of all options please refer to page ?)

Specials:

Stud sizes not listed above can be manufactured as Specials.

For further informationPlease Contact the office or Email :- sales@nutech-eng.com

PRODUCT SPECIFICATION SHEET

A095/... *Plastic Base/Stainless Steel Stud Levelling Foot Range*



Materials...

Stud: - *Stainless Steel type 303*

Base: - *Polyamide Reinforced Nylon*

Part number	Thread Size D1(mm)	Thread Length L(mm)	Base Diameter D2(mm)	Overall Height H(mm)	Max Load (Kg)
A095/044	M8	30	55	57	400
A095/027	M8	60	55	87	400
A095/028	M10	75	55	102	500
A095/029	M12	75	55	102	600
A095/030	M12	125	55	152	600
A095/031	M12	160	55	187	600
A095/010	M12	75	70	108	1000
A095/011	M12	125	70	158	1000
A095/006	M12	150	70	183	1000
A095/005	M16	75	70	111	1500
A095/036	M16	125	70	161	1500
A095/001	M16	150	70	186	1500
A095/004	M16	200	70	236	1500
A095/013	M16	75	100	119	2000
A095/024	M16	125	100	169	2000
A095/014	M16	150	100	194	2000
A095/015	M16	200	100	244	2000
A095/042	M20	125	100	175	2000
A095/003	M20	150	100	200	2000
A095/002	M20	200	100	250	2000
A095/007	M24	150	100	204	2000
A095/016	M24	200	100	254	2000
A095/022	M24	250	100	304	2000

Dimensions are approximate

Bolt Down Base also Availiable - See A195/... Sht

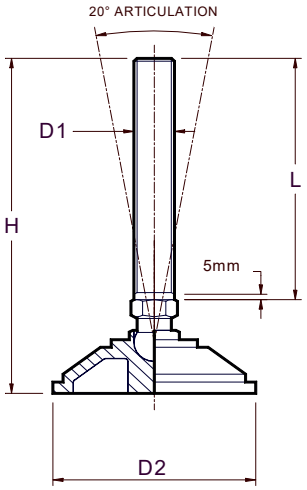

Registered Design

Options Availiable

The following options are availiable on all popular sizes :-

Non-Slip Pad:
Nitrile rubber pad (3mm thick) bonded to the Base.

Vibetech Pad:
Vibration dampening Vibetech pad (6/13mm thick) bonded to the base

Hygenic Seal:
Flexible nitrile cover over the ball and socket arrangement.

Specials:

Stud sizes not listed above can be manufactured as Specials.

For further informationPlease Contact the office or Email :- sales@nutech-eng.com

PRODUCT SPECIFICATION SHEET

A190/...

Bolt Down Plastic Base / Mild Steel Plated Stud Levelling Foot Range



Materials...

Stud: - *Mild Steel Electroless Nickel Plated*

Base: - *Polyamide Reinforced Nylon*

Part number	Thread Size D1(mm)	Thread Length L(mm)	Base Diameter D2(mm)	Centre Distance C1(mm)	Hole Diameter	Overall Height H(mm)	Max Load (Kg)
A190/011	M12	75	100	82	10.5	117	1000
A190/012	M12	125	100	82	10.5	167	1000
A190/013	M12	150	100	82	10.5	192	1000
A190/005	M16	75	100	82	10.5	120	2000
A190/010	M16	100	100	82	10.5	145	2000
A190/018	M16	125	100	82	10.5	170	2000
A190/002	M16	150	100	82	10.5	195	2000
A190/004	M16	200	100	82	10.5	245	2000
A190/001	M20	150	100	82	10.5	199	2000
A190/019	M20	125	100	82	10.5	174	2000
A190/003	M20	200	100	82	10.5	249	2000
A190/025	M20	250	100	82	10.5	299	2000
A190/006	M24	150	100	82	10.5	203	2000
A190/007	M24	200	100	82	10.5	253	2000
A190/021	M24	250	100	82	10.5	303	2000

Dimensions are approximate

Standard Base also Availiable - See FOOTA090…

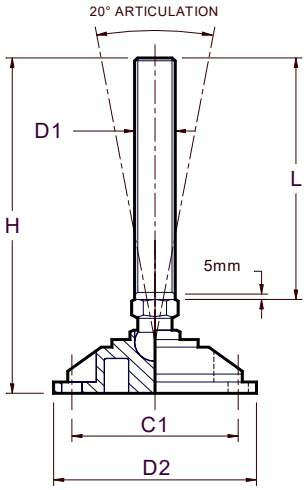

Registered Design

Options Availiable

The following options are availiable on all popular sizes :-

Non-Slip Pad:
Nitrile rubber pad (3mm thick) bonded to the Base.

Vibetech Pad:
Vibration dampening Vibetech pad (6/13mm thick) bonded to the base

Specials:
Stud sizes not listed above can be manufactured as Specials.

PRODUCT SPECIFICATION SHEET

A195/... *Bolt Down Plastic Base / Stainless Steel Stud Levelling Foot Range*



Materials...

Stud: - *Stainless Steel type 303*

Base: - *Polyamide Reinforced Nylon*

Part number	Thread Size D1(mm)	Thread Length L(mm)	Base Diameter D2(mm)	Centre Distance C1(mm)	Hole Diameter (mm)	Overall Height H(mm)	Max Load (Kg)
A195/015	M12	75	100	82	10.5	117	1000
A195/016	M12	125	100	82	10.5	167	1000
A195/017	M12	150	100	82	10.5	192	1000
A195/005	M16	75	100	82	10.5	120	2000
A195/010	M16	125	100	82	10.5	170	2000
A195/002	M16	150	100	82	10.5	195	2000
A195/004	M16	200	100	82	10.5	245	2000
A195/021	M20	100	100	82	10.5	149	2000
A195/025	M20	125	100	82	10.5	174	2000
A195/001	M20	150	100	82	10.5	199	2000
A195/003	M20	200	100	82	10.5	249	2000
A195/006	M24	150	100	82	10.5	203	2000
A195/007	M24	200	100	82	10.5	253	2000
A195/012	M24	250	100	82	10.5	303	2000

Dimensions are approximate

Standartd Base also Availiable - See A095/... Sht

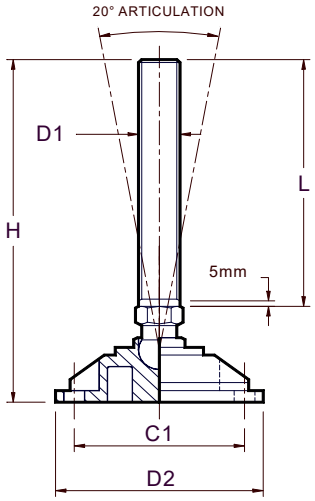

Options Availiable

The following options are availiable on all popular sizes :-

Non-Slip Pad:
Nitrile rubber pad (3mm thick) bonded to the Base.

Vibetech Pad:
Vibration dampening Vibetech pad (6/13mm thick) bonded to the base

Hygenic Seal:
Flexible nitrile cover over the ball and socket arrangement.

Specials:

Stud sizes not listed above can be manufactured as Specials.

For further informationPlease Contact the office or
Email :- sales@nutech-eng.com

PRODUCT SPECIFICATION SHEET

A070/... *Mild Steel Plated Base and Stud Levelling Foot Range*



Materials... **Base and Stud: -** *Mild Steel, Electroless Nickel Plated*

Part number	Thread Size D1(mm)	Thread Length L(mm)	Base Diameter D2(mm)	Overall Height H(mm)	Max Load (Kg)
A070/001	M12	75	55	105	450
A070/002	M12	125	55	155	450
A070/005	M12	150	55	180	600
A070/095	M14	200	70	239	1000
A070/011	M16	75	70	114	1500
A070/018	M16	125	70	164	1500
A070/006	M16	150	70	189	1500
A070/008	M16	200	70	239	1500
A070/024	M16	200	100	245	2000
A070/020	M20	125	100	177	2000
A070/007	M20	150	100	202	2000
A070/014	M20	170	100	220	2000
A070/009	M20	200	100	250	2000
A070/028	M24	125	100	181	3000
A070/012	M24	150	100	206	3000
A070/013	M24	200	100	256	3000
A070/029	M24	250	100	306	3000

Dimensions are approximate

Bolt Down Base also Availiable - See A210...

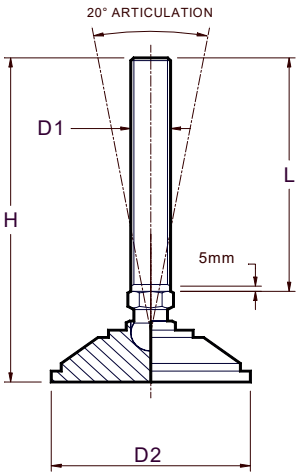

Registered Design

Options Availiable

The following options are availiable on all popular sizes :-

Non-Slip Pad:
Nitrile rubber pad (3mm thick) bonded to the Base.

Vibetech Pad:
Vibration dampening Vibetech pad (6/13mm thick) bonded to the base

Specials:

Stud sizes not listed above can be manufactured as Specials.

For further informationPlease Contact the office or Email :- sales@nutech-eng.com

PRODUCT SPECIFICATION SHEET

A210/...

Low Profile Bolt Down Mild Steel Levelling Foot Range



Materials... **Stud and Base** -Mild Steel,Electroless Nickel Plated.

Part number	Thread Size T (mm)	Thread Length L (mm)	Base Diameter D (mm)	Bolt Down Centres C (mm)	Overall Height H (mm)	Flange Thickness t (mm)	Hole Dia d (mm)	Max Load (Kg)
A210/001	M8	60	50	40	82	4	5.5	300
A210/002	M10	75	50	40	97	4	5.5	500
A210/006	M12	75	60	50	100	5	5.5	1250
A210/007	M12	125	60	50	150	5	5.5	1250
A210/008	M12	150	60	50	175	5	5.5	1250
A210/057	M16	65	80	68	96	6	6.5	1750
A210/009	M16	75	80	68	106	6	6.5	1750
A210/010	M16	125	80	68	156	6	6.5	1750
A210/011	M16	150	80	68	181	6	6.5	1750
A210/014	M16	125	100	82	158	6.5	9	2500
A210/015	M16	150	100	82	183	6.5	9	2500
A210/016	M16	200	100	82	233	6.5	9	2500
A210/017	M20	125	100	82	164	6.5	9	2500
A210/018	M20	150	100	82	189	6.5	9	2500
A210/019	M20	200	100	82	239	6.5	9	2500
A210/022	M20	150	120	100	191	7.5	11	3750
A210/023	M20	200	120	100	241	7.5	11	3750
A210/025	M24	125	120	100	181	7.5	11	3750
A210/026	M24	150	120	100	206	7.5	11	3750
A210/027	M24	200	120	100	256	7.5	11	3750

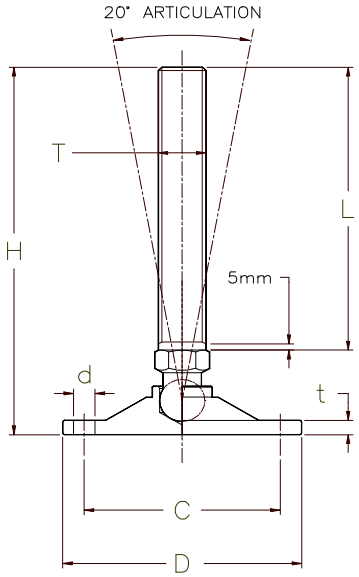

Options Availiable:

Hygenic Seal - Provides a flexible cover over the ball and socket arrangement

Specials:

Stud sizes not listed above can be manufactured as Specials.

For further informationPlease Contact the office or Email :- sales@nutech-eng.com

PRODUCT SPECIFICATION SHEET

A080/...

Stainless Steel Base and Stud Levelling Foot Range



Materials...

Base and Stud: - *Stainless Steel, Type 303*

Part number	Thread Size D1(mm)	Thread Length L(mm)	Base Diameter D2(mm)	Overall Height H(mm)	Max Load (Kg)
A080/003	M8	30	38	55	450
A080/135	M8	40	38	65	450
A080/002	M8	60	38	85	450
A080/004	M10	75	38	100	600
A080/046	M10	150	55	180	500
A080/001	M12	50	55	80	1500
A080/041	M12	75	38	100	1000
A080/042	M12	125	38	150	1000
A080/014	M12	75	55	105	1500
A080/015	M12	125	55	155	1500
A080/005	M12	150	55	180	1500
A080/016	M16	75	70	114	2000
A080/020	M16	125	70	164	2000
A080/006	M16	150	70	189	2000
A080/008	M16	200	70	239	2000
A080/039	M20	125	100	177	3000
A080/007	M20	150	100	202	3000
A080/009	M20	200	100	252	3000
A080/040	M24	125	100	181	4000
A080/010	M24	150	100	206	4000
A080/012	M24	200	100	256	4000
A080/011	M24	250	100	306	4000

Dimensions are approximate

Bolt Down Base also Availiable - See Data Sheet A200/...

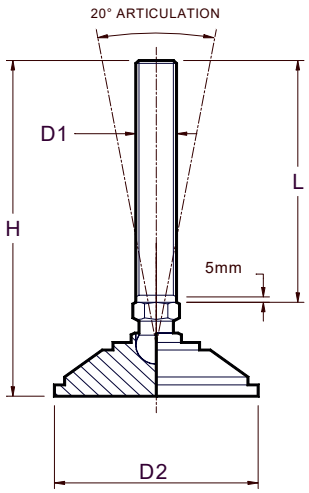

Registered Design

Options Availiable

The following options are availiable on all popular sizes :-

Non-Slip Pad:
Nitrile rubber pad (3mm thick) bonded to the Base.

Vibetech Pad:
Vibration dampening Vibetech pad (6/13mm thick) bonded to the base

Hygenic Seal:
Flexible nitrile cover over the ball and socket arrangement.

Specials:

Stud sizes not listed above can be manufactured as Specials.

For further information please contact the office or Email :- sales@nutech-eng.com

PRODUCT SPECIFICATION SHEET

A200/...

Low Profile Bolt Down Stainless Steel Levelling Foot Range



Materials... **Stud and Base** - Stainless Steel, type 303

Part number	Thread Size T (mm)	Thread Length L (mm)	Base Diameter D (mm)	Bolt Down Centres C (mm)	Overall Height H (mm)	Flange Thickness t (mm)	Hole Dia d (mm)	Max Load (Kg)
A200/078	M8	40	50	40	62	4	5.5	300
A200/001	M8	60	50	40	82	4	5.5	300
A200/002	M10	75	50	40	97	4	5.5	500
A200/003	M12	75	50	40	100	4	5.5	750
A200/004	M12	125	50	40	150	4	5.5	750
A200/006	M12	75	60	50	100	5	5.5	1250
A200/007	M12	125	60	50	150	5	5.5	1250
A200/008	M12	150	60	50	175	5	5.5	1250
A200/009	M16	75	80	68	106	6	6.5	1750
A200/010	M16	125	80	68	156	6	6.5	1750
A200/011	M16	150	80	68	181	6	6.5	1750
A200/012	M16	200	80	68	231	6	6.5	1750
A200/013	M16	75	100	82	108	6.5	9	2500
A200/014	M16	125	100	82	158	6.5	9	2500
A200/015	M16	150	100	82	183	6.5	9	2500
A200/016	M16	200	100	82	233	6.5	9	2500
A200/017	M20	125	100	82	164	6.5	9	2500
A200/018	M20	150	100	82	189	6.5	9	2500
A200/019	M20	200	100	82	239	6.5	9	2500
A200/021	M20	125	120	100	166	7.5	11	3750
A200/022	M20	150	120	100	191	7.5	11	3750
A200/023	M20	200	120	100	241	7.5	11	3750
A200/025	M24	125	120	100	181	7.5	11	3750
A200/026	M24	150	120	100	206	7.5	11	3750
A200/027	M24	200	120	100	256	7.5	11	3750

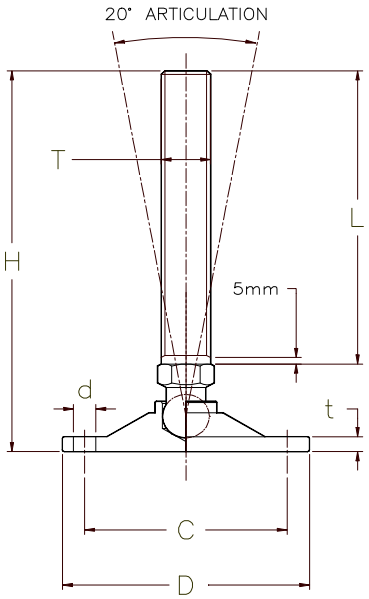

Options Availiable:

Hygenic Seal - Provides a flexible cover over the ball and socket arrangement

Specials:

Stud sizes not listed above can be manufactured as Specials.

For further information please contact the office or e-mail :- sales@nutech-eng.com

PRODUCT SPECIFICATION SHEET

A085/... *316L Stainless Steel Base and Stud Levelling Foot Range*



Materials...

Base and Stud: - *Stainless Steel, Type 316L*

Part number	Thread Size D1(mm)	Thread Length L(mm)	Base Diameter D2(mm)	Overall Height H(mm)	Max Load (Kg)
A085/001	M8	60	38	85	450
A085/002	M10	75	38	100	450
A085/007	M12	75	55	105	1500
A085/003	M12	150	55	180	1500
A085/004	M16	150	70	189	2000
A085/005	M20	150	100	202	3000
A085/006	M24	200	100	256	4000

Dimensions are approximate

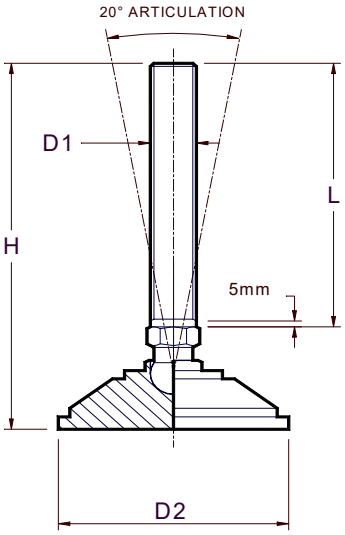

Options Availiable

The following options are availiable on all popular sizes :-

Non-Slip Pad:
Nitrile rubber pad (3mm thick) bonded to the Base.

Vibetech Pad:
Vibration dampening Vibetech pad (6/13mm thick) bonded to the base

Hygenic Seal:
Flexible nitrile cover over the ball and socket arrangement.

Specials:

Stud sizes not listed above can be manufactured as Specials.

For further information please contact the office or Email :- sales@nutech-eng.com

PRODUCT SPECIFICATION SHEET

A087/. *Low Profile Stainless Steel Base and Stud Levelling Foot Range*



Materials...

Base - Stainless Steel Type 303
with Inset Nitrile Rubber Pad

Stud - Stainless Steel type 303

Part number	Thread Size D1 (mm)	Thread Length L (mm)	Base Diameter D2 (mm)	Overall Height H (mm)	Max Load (Kg)
A087/001	M12	75	55	102	750
A087/002	M12	125	55	152	750
A087/003	M12	150	55	177	750
A087/004	M16	75	65	108	1250
A087/005	M16	125	65	158	1250
A087/006	M16	150	65	183	1250
A087/009	M16	150	75	185	1250
A087/010	M20	125	75	166	1750
A087/011	M20	150	75	191	1750
A087/012	M20	200	75	241	1750
A087/016	M24	125	100	177	2500
A087/017	M24	150	100	202	2500
A087/018	M24	200	100	252	2500

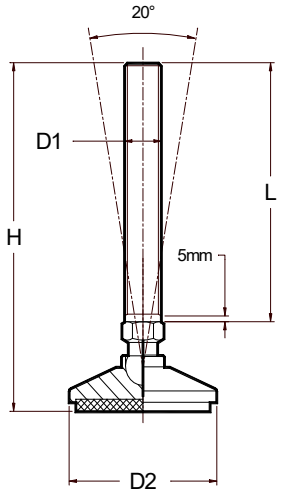

Options Availiable:

Hygenic Seal - Provides a flexible cover over the ball and socket arrangement

Specials:

Stud sizes not listed above can be manufactured as Specials.

For further information please contact the office or visit our Website on www.sales@nutech-eng.com

PRODUCT SPECIFICATION SHEET

A089/ *Low Profile Hygienic Stainless Steel Levelling Foot Range*



Materials...

Base - Stainless Steel Type 303

Stud - Stainless Steel type 303
Shrouded Nut - Stainless Steel Type 303

Part number	Thread Size D1 (mm)	Thread Length L (mm)	Base Diameter D2 (mm)	Adjustment H3(mm)	Min Height H1 (mm)	Overall Height H (mm)	Maximium Recommended Load (Kgs)
A089/001	M12	68	55	25	70	124	750
A089/002	M12	92	55	50	95	174	750
A089/003	M16	68	75	25	75	130	1750
A089/004	M16	92	75	50	100	180	1750
A089/006	M20	92	100	50	110	186	2500

Specials:

Stud sizes not listed above can be manufactured as Specials.

For further information please contact the office or visit our Website on www.sales@nutech-eng.com

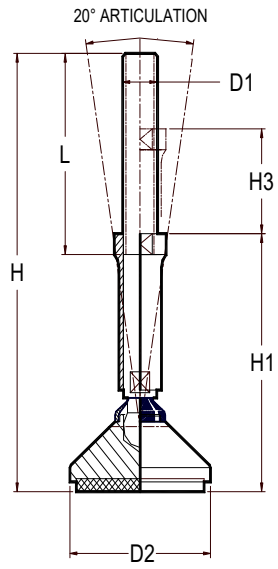

PRODUCT SPECIFICATION SHEET

A105/... *Vibration Dampening Machine Mount Stainless Steel Stud and Base*



Materials...

Base - Pressed Stainless Steel type 304 with inset Nitrile Rubber Core

Stud - Stainless Steel type 303

Part number	Thread Size D1 (mm)	Thread Length L (mm)	Base Diameter D (mm)	Overall Height H (mm)	Maximium Recommended Load (Kgs)
A105/001	M10	50	50	75	350
A105/002	M10	75	50	100	350
A105/003	M10	100	50	125	350
A105/040	M10	75	75	100	350
A105/060	M10	25	50	50	350
A105/005	M12	75	50	100	350
A105/006	M12	100	50	125	350
A105/008	M12	150	50	175	350
A105/011	M16	100	50	128	350
A105/013	M16	150	50	178	350
A105/016	M16	100	75	133	750
A105/018	M16	150	75	183	750
A105/019	M16	200	75	233	750
A105/021	M16	75	100	113	750
A105/022	M16	100	100	138	1000
A105/024	M16	150	100	188	1000
A105/025	M16	200	100	238	1000
A105/028	M20	150	75	185	750
A105/029	M20	200	75	235	750
A105/031	M20	100	100	141	1000
A105/033	M20	150	100	191	1000
A105/034	M20	200	100	241	1000
A105/036	M24	150	100	193	1000
A105/038	M24	250	100	293	1000

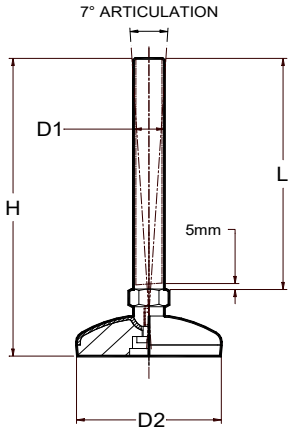

Specials:

Stud sizes not listed above can be manufactured as Specials.

For further information - Please contact the office or visit our Website on www.sales@nutech-eng.com

PRODUCT SPECIFICATION SHEET

A125/... Hygienic Stainless Steel Machine Mounts



Materials... **Base** - Pressed Stainless Steel type 303 with inset Nitrile Rubber Core

Stud - Stainless Steel type 303

Shrouded Nut - Stainless Steel type 303

Part number	Thread Size D1 (mm)	Thread Length L (mm)	Base Diameter D2 (mm)	Adjustment H3(mm)	Min Height H1 (mm)	Overall Height H (mm)	Maximium Recommended Load (Kgs)
A125/001	**M12**	**68**	**50**	**25**	**70**	**120**	**350**
A125/002	**M12**	**92**	**50**	**50**	**95**	**170**	**350**
A125/003	**M16**	**68**	**75**	**25**	**75**	**130**	**750**
A125/004	**M16**	**92**	**75**	**50**	**100**	**180**	**750**
A125/005	**M20**	**68**	**100**	**25**	**85**	**140**	**1000**
A125/006	**M20**	**92**	**100**	**50**	**110**	**194**	**1000**

Specials: Stud sizes not listed above can be manufactured as Specials.

For further information - Please contact the office or visit our Website on
www.sales@nutech-eng.com

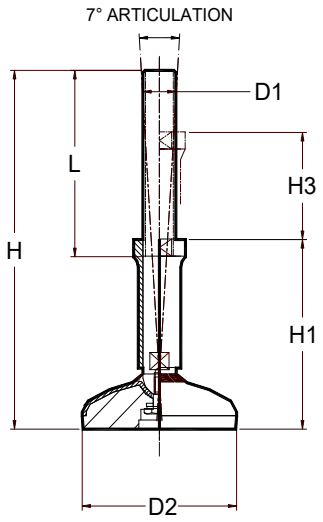

PRODUCT SPECIFICATION SHEET

A205/... *Vibration Dampening Machine Mount - Stainless Steel Stud Bolt Down Base with Moulded Nitrile Rubber Core*



Materials...

Base - Pressed Stainless Steel type 303 with inset Nitrile Rubber Core With Stainless Steel tag

Stud - Stainless Steel type 303

Part number	Thread Size D1 (mm)	Thread Length L (mm)	Overall Height H (mm)	Base Diameter D2 (mm)	Distance Between Centres C1 (mm)	Hole Dia. d (mm)	Maximium Recommended Load (Kgs)
A205/029	M12	75	105	75	52	13	750
A205/001	M16	100	133	75	52	13	750
A205/002	M16	150	183	75	52	13	750
A205/003	M16	200	233	75	52	13	750
A205/007	M16	100	138	100	67	13	1000
A205/008	M16	150	188	100	67	13	1000
A205/009	M16	200	238	100	67	13	1000
A205/005	M20	150	183	75	52	13	750
A205/006	M20	200	233	75	52	13	750
A205/011	M20	150	191	100	67	13	1000
A205/012	M20	200	241	100	67	13	1000
A205/013	M24	150	193	100	67	13	1000
A205/014	M24	250	293	100	67	13	1000

Dimensions are approximate

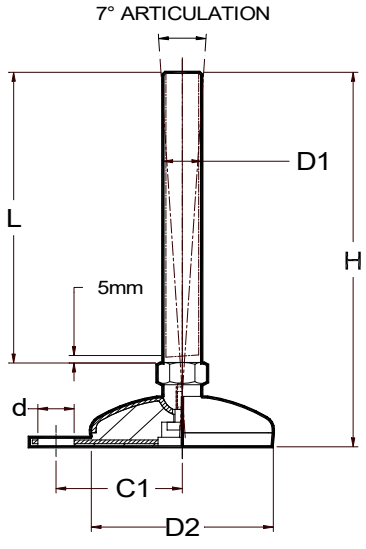

Specials:

Stud sizes not listed above can be manufactured as Specials.

PRODUCT SPECIFICATION SHEET

A300/...

Light Duty Low Profile Fixed Stud Levelling Foot
Stainless Steel Stud and Base with Inset Nitrile Rubber Pad



Materials...

Base - Stainless Steel type 303 with Inset Nitrile Rubber Pad

Stud - Stainless Steel type 303

Part number	Thread Size T (mm)	Thread Length L (mm)	Base Diameter D (mm)	Overall Height H (mm)	Pad Thickness (mm)	Max Load (Kgs)
A300/001	M8	40	40	52	3	450
A300/002	M8	60	40	72	3	450
A300/009	M8	40	50	54	3	450
A300/010	M8	60	50	74	3	450
A300/003	M10	40	40	52	3	600
A300/004	M10	60	40	72	3	600
A300/005	M10	80	40	92	3	600
A300/011	M10	40	50	54	3	600
A300/012	M10	60	50	74	3	600
A300/013	M10	80	50	94	3	600
A300/034	M12	42	50	56	3	750
A300/014	M12	50	50	65	3	750
A300/015	M12	75	50	90	3	750
A300/016	M12	100	50	115	3	750

Dimensions are approximate

Heavy Duty Range also Availiable - See A315/...

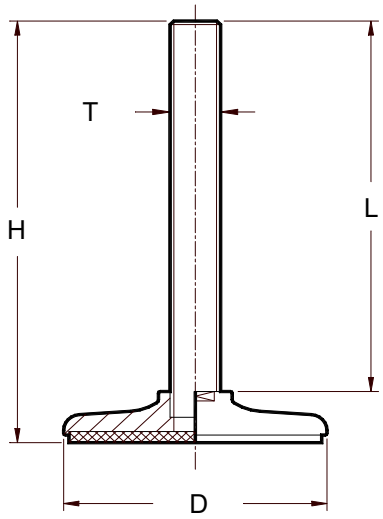

Specials:

Stud sizes not listed above can be manufactured as Specials.

For further information please contact the office or Email :- sales@nutech-eng.com

Registered Design

PRODUCT SPECIFICATION SHEET

A315/... ***Heavy Duty Low Profile Fixed Stud Levelling Foot - Stainless Steel Stud and Base with Inset Nitrile Rubber Pad***



Materials... **Base** - Stainless Steel Base with an Inset Nitrile Rubber Anti-Slip Pad

Stud - Stainless Steel

Part number	Thread Size T (mm)	Thread Length L (mm)	Base Diameter D (mm)	Overall Height H (mm)	Pad Thickness (mm)	Max Load (Kgs)
A315/015	M12	36	60	51	3	1250
A315/001	M12	75	60	90	3	1250
A315/002	M12	125	60	140	3	1250
A315/003	M12	150	60	165	3	1250
A315/004	M12	150	80	171	3	1500
A315/005	M16	150	80	171	3	2000
A315/006	M16	150	120	174	3	2000
A315/007	M20	200	120	224	3	3000
A315/016	M20	250	100	273	3	3000
A315/009	M24	200	150	226	3	4000

Light Duty Compact Range also Availiable - See A300/... Sht

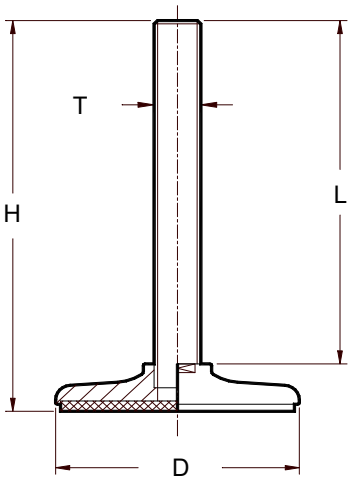

Options:

Vibration Dampening Pad (Vibetech AV500)

Specials:

Stud sizes not listed above can be manufactured as Specials.

For further information please contact the office or Email :- sales@nutech-eng.com

PRODUCT SPECIFICATION SHEET

A400/.. *Anti-Vibration Machine Mounts*



Features

The Nu-Tech Anti-Vibration Mount single part base construction created by moulding nitril rubber around a cast iron bearing plate directly into the outer cover.

The unique design enables height adjustment whilst maintaing a totally sealed vibration absorbing base.

Part Number	Rubber Hardness	Dimensions		Bolt	Adjust Height	Static load Per Mount	Nominal Values		Weight
	(Shore)	Φ	H	M	h	kg	Sz(mm)	foz(HZ)	(Kg)
A400/002	60	80	25	M10 (1.25mm Pitch) x 80	8	170	2.8	9.4	0.40
A400/003	80	120	32	M12 (1.25mm Pitch) x 100	12	1200	3.2	8.8	1.10
A400/004	80	160	35	M16 (1.50mm Pitch) x 120	12	3500	3.3	8.8	2.20

Load Range Per Mount in Kgs

Part number	Presse and Punches Max. Strokes Per Minute			Lathes,Shaper, Angular Plunge Grinders	Milling & Hobbing Machines	Grinding & General Machines	Instruments
	1-125	126-160	161-200				
A400/002	**100**	**N/A**	**N/A**		**75**	**150**	**170**
A400/003	**620**	**350**	**175**	**250**	**480**	**920**	**1200**
A400/004	**1750**	**1050**	**500**	**720**	**1300**	**2550**	**3500**

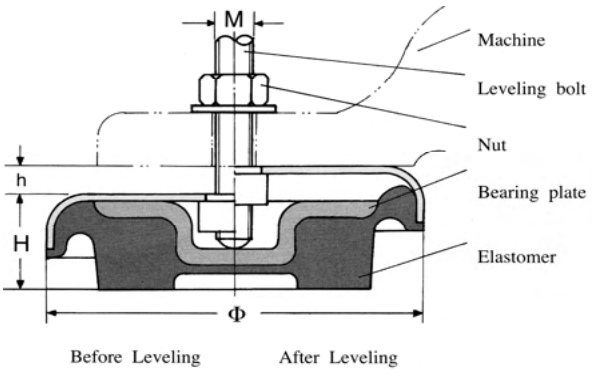

PRODUCT SPECIFICATION SHEET

A020/... ***Threaded Insert with Plated Brass Bush***
For Square Hollow Sections



Materials... **Bush - Brass Nickel Plated**

Moulding - Polyamide Reinforced Nylon

Part Number	Tube Size (mm)	Thread Size D3 (mm)	External Dimensions D1(mm)	Internal Dimensions D2(mm)	Engagement Length H1(mm)	Shoulder Length H2(mm)	Threaded Bush Length H3(mm)	Max Recommended Load(Kg)
A020/022	30 x 30 x 1.5	M8	30	27	35	8	24	500
A020/001	30 x 30 x 1.5	M10	30	27	35	8	24	500
A020/002	30 x 30 x 1.5	M12	30	27	35	8	24	500
A020/003	30 x 30 x 1.5	M16	30	27	35	8	24	500
A020/023	40 x 40 x 1.5	M8	40	37	35	8	24	1000
A020/004	40 x 40 x 1.5	M10	40	37	35	8	24	1000
A020/005	40 x 40 x 1.5	M12	40	37	35	8	24	1000
A020/006	40 x 40 x 1.5	M16	40	37	35	8	24	1000
A020/007	40 x 40 x 1.5	M20	40	37	35	8	24	1000
A020/024	40 x 40 x 2.0	M8	40	36	35	8	24	1000
A020/026	40 x 40 x 2.0	M10	40	36	35	8	24	1000
A020/025	40 x 40 x 2.0	M12	40	36	35	8	24	1000
A020/014	40 x 40 x 2.0	M16	40	36	35	8	24	1000
A020/008	40 x 40 x 2.0	M20	40	36	35	8	24	1000
A020/028	50 x 50 x 1.5	M12	50	47	45	10	24	1200
A020/009	50 x 50 x 1.5	M16	50	47	45	10	24	1200
A020/010	50 x 50 x 1.5	M20	50	47	45	10	24	1200
A020/030	50 x 50 x 2.0	M12	50	46	45	10	24	1200
A020/011	50 x 50 x 2.0	M16	50	46	45	10	24	1200
A020/012	50 x 50 x 2.0	M20	50	46	45	10	24	1200
A020/013	50 x 50 x 2.0	M24	50	46	45	10	24	1200

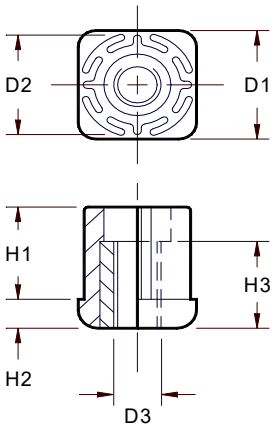

Registered Design

Options Available

Stainless Steel Bushing:

Please refer to A021/.. Range for Stainless steel inserts

described on sheet

Thread sizes not listed above can be manufactured as Specials.

For further information please contact the office or Email :- sales@nutech-eng.com

PRODUCT SPECIFICATION SHEET

A021/... ***Threaded Insert with Stainless Steel Bush***
For Square Hollow Sections



Materials... **Bush - Stainless Steel type 303**
Moulding - Polyamide Reinforced Nylon

Part Number	Tube Size (mm)	Thread Size D3 (mm)	External Dimensions D1(mm)	Internal Dimensions D2(mm)	Engagement Length H1(mm)	Shoulder Length H2(mm)	Threaded Bush Length H3(mm)	Max Recommended Load(Kg)
A021/001	30 x 30 x 1.5	M10	30	27	35	8	24	500
A021/002	30 x 30 x 1.5	M12	30	27	35	8	24	500
A021/003	30 x 30 x 1.5	M16	30	27	35	8	24	500
A021/004	40 x 40 x 1.5	M10	40	37	35	8	24	1000
A021/005	40 x 40 x 1.5	M12	40	37	35	8	24	1000
A021/006	40 x 40 x 1.5	M16	40	37	35	8	24	1000
A021/007	40 x 40 x 1.5	M20	40	37	35	8	24	1000
A021/022	40 x 40 x 2.0	M10	40	36	35	8	24	1000
A021/023	40 x 40 x 2.0	M12	40	36	35	8	24	1000
A021/014	40 x 40 x 2.0	M16	40	36	35	8	24	1000
A021/008	40 x 40 x 2.0	M20	40	36	35	8	24	1000
A021/026	50 x 50 x 1.5	M12	50	47	45	10	24	1200
A021/009	50 x 50 x 1.5	M16	50	47	45	10	24	1200
A021/010	50 x 50 x 1.5	M20	50	47	45	10	24	1200
A021/028	50 x 50 x 2.0	M12	50	46	45	10	24	1200
A021/011	50 x 50 x 2.0	M16	50	46	45	10	24	1200
A021/012	50 x 50 x 2.0	M20	50	46	45	10	24	1200
A021/013	50 x 50 x 2.0	M24	50	46	45	10	24	1200

Dimensions are approximate

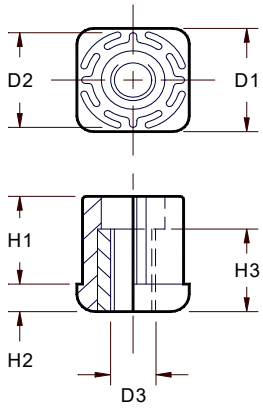

Registered Design

Specials:

Thread sizes not listed above can be manufactured as Specials.

For further information Please Contact the office or Email :- sales@nutech-eng.com

PRODUCT SPECIFICATION SHEET

A025/... ***Weldable Stainless Steel Threaded Insert***



Materials... **Stainless Steel type 304**

Part number	Section size Ref	Outer Box D1(Sq)	Inner Box D2	Thread size D3	Height H1	Height H2	Max Recommended Load(Kg)
A025/001	30 x 30 x 2.0	30	26	M12	12	4	1500
A025/003	30 x 30 x 3.0	30	24	M12	12	4	1500
A025/005	40 x 40 x 2.0	40	36	M16	16	5	2000
A025/006	40 x 40 x 2.0	40	36	M20	20	5	3000
A025/007	40 x 40 x 3.0	40	34	M16	16	5	2000
A025/008	40 x 40 x 3.0	40	34	M20	20	5	3000
A025/010	50 x 50 x 2.0	50	46	M16	16	6	2000
A025/011	50 x 50 x 2.0	50	46	M20	20	6	3000
A025/013	50 x 50 x 3.0	50	44	M16	16	6	2000
A025/015	50 x 50 x 3.0	50	44	M24	24	6	4000

Dimensions are approximate

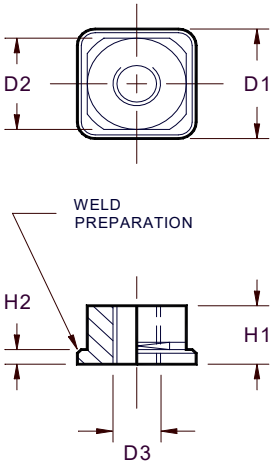

Specials:

Thread sizes not listed above can be manufactured as Specials.

For further information please contact the office or Email :- sales@nutech-eng.com

Hygienic Seal



Vibetech Pad

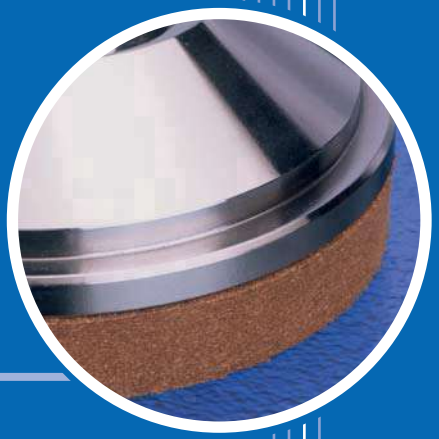

Non Slip Pad

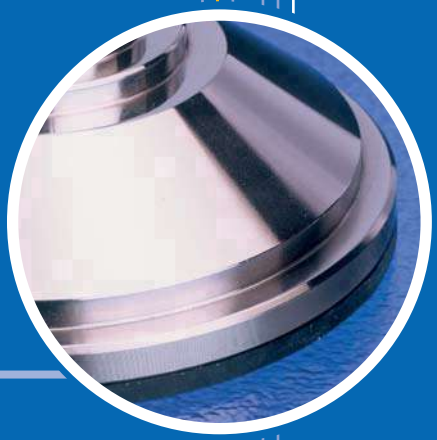

Nu-Tech Engineering Services Ltd
10 Compton Business Park, Thrush Road,
Poole,
Dorset.
BH12 4FJ
T +44 (0)1202 724100
E sales@nutech-eng.com
W www.nutech-eng.com