Brand of NTN corporation

Technical data

UKFCE209H

Bearing units



Grey cast housing, radial insert ball bearing with adapter sleeve,seal with slinger

KIT CONTENT

UK209G2H, FCE209

VISUAL (S)

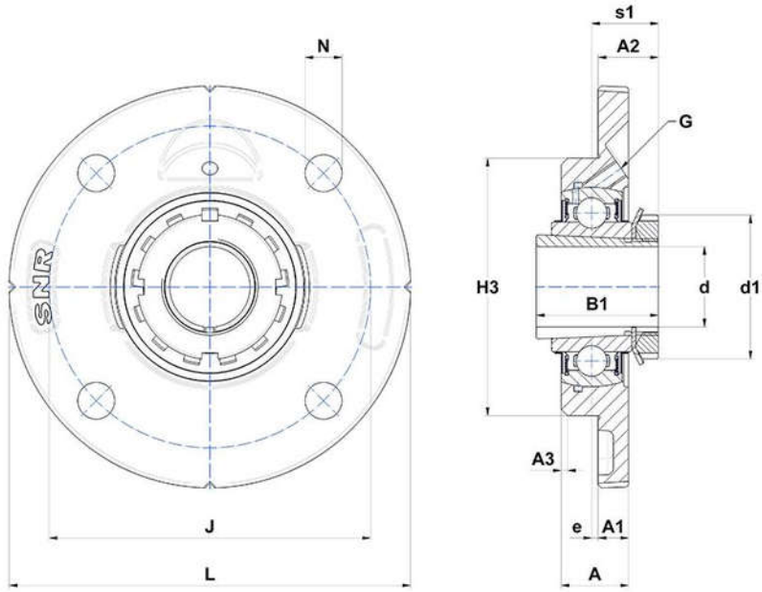

PRODUCT DEFINITION

Brand	SNR
A - Housing height	25 mm
A1 - Housing foot height / flange height	12 mm
A2 - Total height from mounting surface	24 mm
A3 - Centering depth / chamfer dimension	2 mm
B - Width of Inner Ring	30 mm

UKFCE209H
Bearing units

PRODUCT DEFINITION	
B1 - Overall width Inner Ring	50 mm
d - Shaft diameter	40 mm
d1 - Outer dia of eccent. Lock. collar / nut of adapter sleeve	65 mm
e - Distance mounting surface to bearing center	-2 mm
G - Grease fitting	M6x1
H3 - Centering dia	105 mm
J - Mounting holes distance	130 mm
L - Housing width / diameter	155 mm
N - Mounting hole dimension	14 mm
s1 - Distance nut to middle of bearing raceway	26 mm

PRODUCT PERFORMANCE	
C - Dynamic load rating	31850000 mN
C0 - Static load rating	20800000 mN
Operating temperature min.	253,15 °K
Operating temperature max.	373,15 °K

OTHER FEATURES	
Mass	1,98 kg
Adapter sleeve designation	H2309