O8P201

Retro-reflective sensor

O8P-DNKG/2,0M

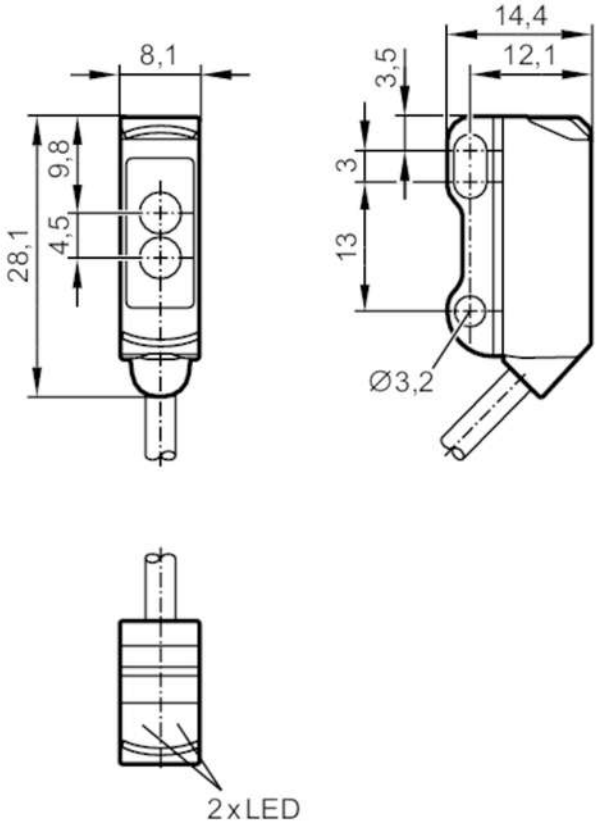

receiver in upper lens
transmitter in lower lens

Product characteristics		
Type of light		red light
Housing		rectangular
Application		
Special feature		polarisation filter
Function principle		Retro-reflective sensor
Electrical data		
Operating voltage	[V]	10...30 DC
Current consumption	[mA]	20; ((24 V))
Protection class		III
Reverse polarity protection		yes
Type of light		red light
Wave length	[nm]	633
Outputs		
Electrical design		NPN
Output function		dark-on mode
Max. voltage drop switching output DC	[V]	2.5

O8P201

Retro-reflective sensor

O8P-DNKG/2,0M

Permanent current rating of switching output DC	[mA]	100	
Switching frequency DC	[Hz]	1000	
Short-circuit protection		yes	
Type of short-circuit protection		pulsed	
Detection zone			
Range referred to prismatic reflector	[m]	0.02...1.8; (Prismatic reflector Ø 30 E20004)	
Range adjustable		no	
Max. light spot diameter	[mm]	120	
Light spot dimensions refer to		at maximum range	
Polarisation filter available		yes	
Operating conditions			
Ambient temperature	[°C]	-25...60	
Protection		IP 65; IP 67	
Tests / approvals			
EMC		EN 60947-5-2	
MTTF	[years]	1067	
UL approval		Ta	-25...60 °C
		Enclosure type	Type 1
		power supply	Limited Voltage/Current
		UL Approval no.	E014
		File number UL	E174191
Mechanical data			
Weight	[g]	37.4	
Housing		rectangular	
Dimensions	[mm]	28.1 x 8.1 x 14.4	
Materials		housing: ABS; stainless steel (316L/1.4404)	
Lens material		PMMA	
Lens alignment		side lens	
Displays / operating elements			
Display		switching status	1 x LED, yellow
		operation	1 x LED, green
Remarks			
Pack quantity		1 pcs.	

O8P201

Retro-reflective sensor

O8P-DNKG/2,0M

Electrical connection

Cable: 2 m, PVC, black, Ø 2.9 mm; 3 x 0.08 mm²

Connection

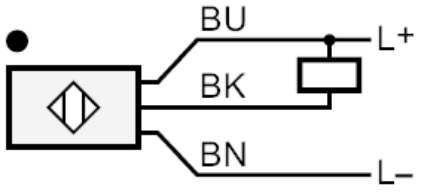

Diagrams and graphs

excess gain graph

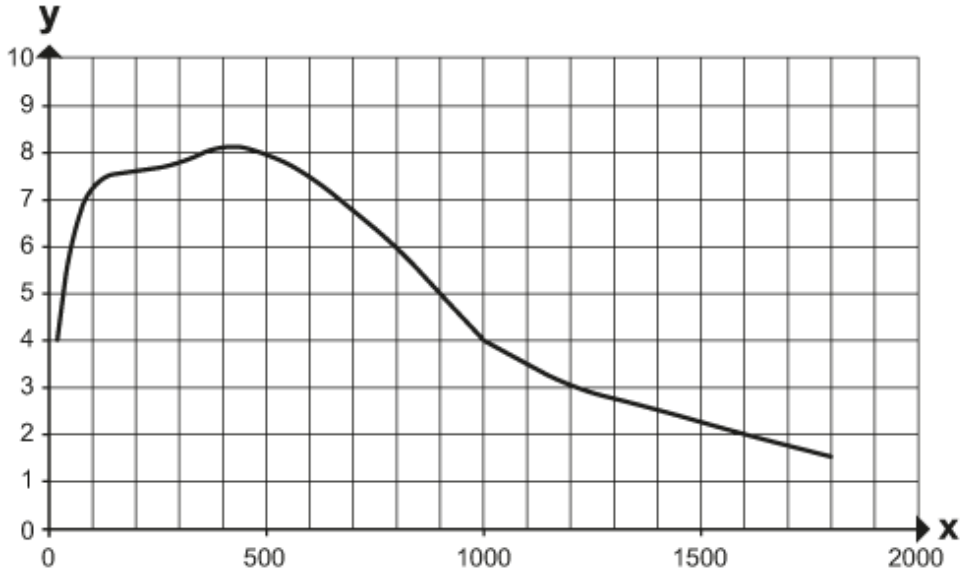

x: distance [mm]

y: excess gain factor