LAPP GROUP	**DATA SHEET**	5311 2543
	SKINTOP® MS-HF-M BRUSH	valid from: 27.07.2016

The SKINTOP® MS-HF-M BRUSH a nickel-plated brass cable gland especially designed for copper-screened cables, used to achieve a low-resistance screen contact, strain relief and high protection class.
The SKINTOP® MS-HF-M BRUSH contacts the screen much faster than any other system.



Components:

Gland body	Brass, nickel-plated
Cap nut	Brass, nickel-plated
Insert with lamellar cage	Polyamide, Halogen free V0 (acc. to UL 94)
Seal insert for the lamellar cage	Special Elastomer Halogen free, flame retardant
Contact brush	Brass wire
O-ring	Special Elastomer Halogen free, flame retardant

Technical features:

Connecting thread	M25x1,5 up to M63x1.5 acc. to EN 60423
Protection class	IP68 – 10 bar, test acc. to EN 60529 IP69 acc. to EN 60529
Temperature range	Dynamic -25 °C up to +100 °C Statically -40 °C up to +100 °C
Transfer impedance	≤ 10 mOhm
Corrosion-protection class	C4

Norm Reference:

Tested in according to:

DIN EN 45545-2: 2013-08
“Railway applications – Fire protection to railway vehicles – Part 2: Requirements for fire behavior of materials and components.“
Test result: Hazard Level **HL3** acc. to DIN EN ISO 4589-2: 2006-06

DIN EN 45545-3: 2013-08
„Railway applications – Fire protection to railway vehicles – Part 3: Fire resistance requirements for fire barriers.“
Classification: **E30** acc. to DIN EN 13501-2: 2010-02

For more information please see our current catalogue.

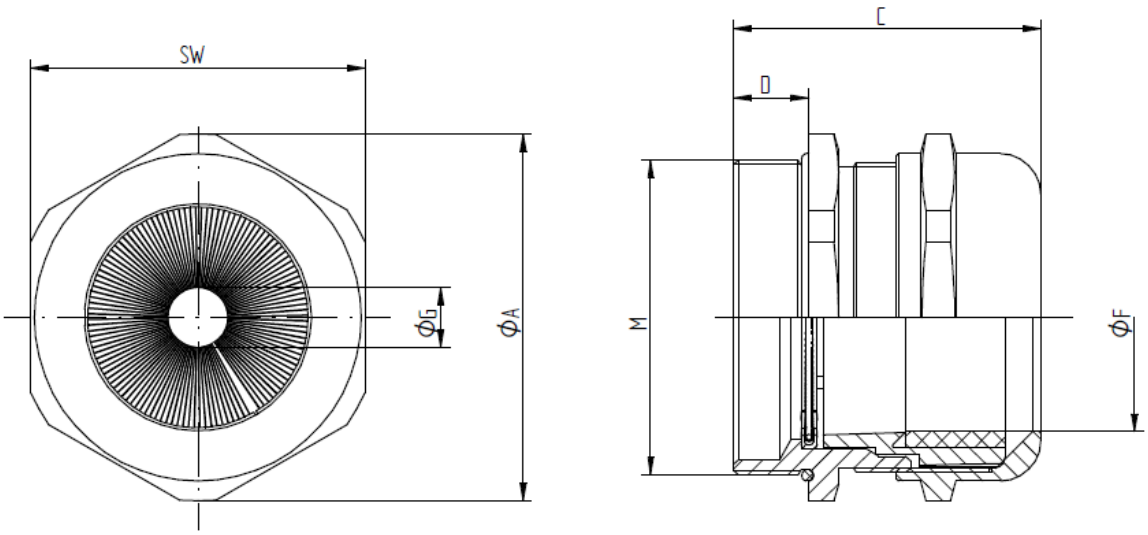

M	SW [mm]	Ø A [mm]	C max. [mm]	D [mm]	Ø F [mm] Clamping range	Ø G [mm] over braiding	O-Ring [mm]	Article No.
M25x1,5	29	31,9	36,0	8	9–17	6–13,5	22x2	5311 2543
M32x1,5	36	39,6	42,2	9	11–21	8–18	28x2	5311 2544
M40x1,5	45	49,5	49,5	9	19–28	10–26	36x2	5311 2545
M50x1,5	54	59,0	52,0	10	27–35	14–36	46x2	5311 2546
M63x1,5	67	73,5	61,3	15	34–45	20–40	57x2	5311 2547

Recommended torque rates in acc. to EN 62444:

Size	Torque [Nm]
M25x1,5	12
M32x1,5	18
M40x1,5	18
M50x1,5	20
M63x1,5	20