Bulkhead Connector

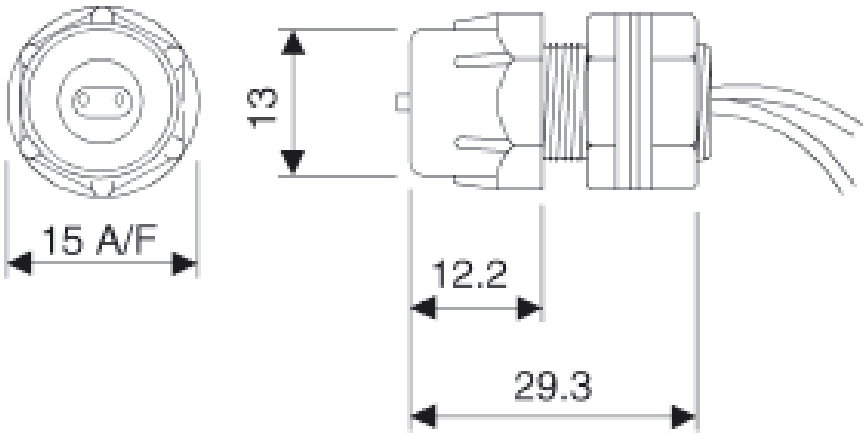

FEATURES:

- Panel thickness - 0.5mm to 4mm
- Cut out diameter - 13mm
- Spout diameter in – 2 x 2.1mm brass spout for twin tube with locking nut, Out 2 x 1.5mm bore PVC tube 150mm long.
- Black nylon & PVC
- Fixing – Flange nut