Nexus Voice Sounder (AC)

Nexus voice sounders combine normal sounder signals with a clear, synchronised voice message to help reduce confusion and distress during an active alarm.

Standard units are available with 4 pre-programmed messages, selected from an extensive message library covering almost any conceivable application. Bespoke messages are also available on request.

All Nexus voice sounders have a USB interface that allows special messages in WAV format to be downloaded onto the sounder from any PC, providing users with the flexibility of adding/removing messages in-house.

Features

- **Choice of up to 4 messages**
- **Extensive message library or bespoke messages available**
- **Download messages in-house via built in USB port**
- **Max 116dB (A) tone and 90dB (A) message outputs**
- **Automatic synchronisation**
- **Robust construction; IP66 rated for outdoor environments**
- **Volume control - 20dB**
- **Separate connections for sounder & beacon**



Applications - Industrial alarm, Process control alarm

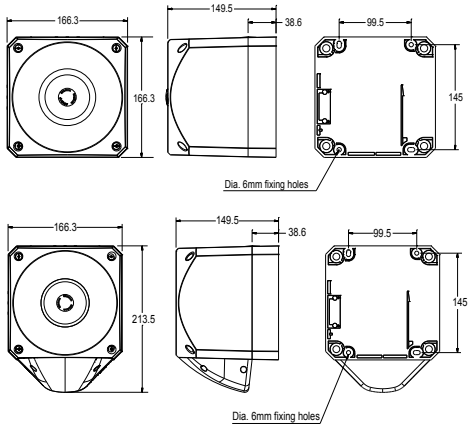

Specifications

Part No.	Lens Colour	Beacon Type	Audibility at 1m (typical)	Tones (Up to)	Voltage (50/60Hz)	Sounder Current	Beacon Current	Messages
PNV-0016	-	Sounder Only	Up to 116dB (A)	64	110/230V AC	30mA (max)	-	4
PNV-0018	Red lens	Xenon beacon	Up to 116dB (A)	64	110/230V AC	30mA (max)	70mA	4
PNV-0019	Amber lens	Xenon beacon	Up to 116dB (A)	64	110/230V AC	30mA (max)	70mA	4
PNV-0020	Green lens	Xenon beacon	Up to 116dB (A)	64	110/230V AC	30mA (max)	70mA	4
PNV-0021	Blue lens	Xenon beacon	Up to 116dB (A)	64	110/230V AC	30mA (max)	70mA	4
PNV-0030	Clear lens	Xenon beacon	Up to 116dB (A)	64	110/230V AC	30mA (max)	70mA	4

IP Rating: IP66 **Operating Temp:** -25°C to +55°C **Cable Entries:** 5 **Weight:** Sounder 1.1kg; Sounder Beacon 1.2kg

klaxon
Signalling Solutions