60x60x25 mm

29.0~40.0 CFM



Specifications

Model	Bearing	Rating Voltage	Power Current	Power Consumption	Speed	Air Flow	Static Pressure	Noise	Weight	Curve
	◓ 2BALL ○ Sleeve	(VDC)	(mA)	(WATTS)	(RPM)	(CFM)	(Inch-H_2O)	(dB(A))	(g)	
PE60251BX-000U-A99	◓	12	370	4.44	7600	40.0	0.64	46.0	71.0	1
PE60251B1-000U-A99	◓	12	297	3.57	6900	36.0	0.54	44.0	71.0	2
PE60251B2-000U-A99	◓	12	232	2.79	6100	31.5	0.42	42.0	71.0	3
PE60251B3-000U-A99	◓	12	197	2.37	5600	29.0	0.36	38.0	71.0	4
PE60252BX-000U-A99	◓	24	190	4.56	7600	40.0	0.64	46.0	75.0	1
PE60252B1-000U-A99	◓	24	155	3.72	6900	36.0	0.54	44.0	75.0	2
PE60252B2-000U-A99	◓	24	121	2.91	6100	31.5	0.42	42.0	75.0	3
PE60252B3-000U-A99	◓	24	104	2.50	5600	29.0	0.36	38.0	75.0	4

Air Flow-Static Pressure Characteristics

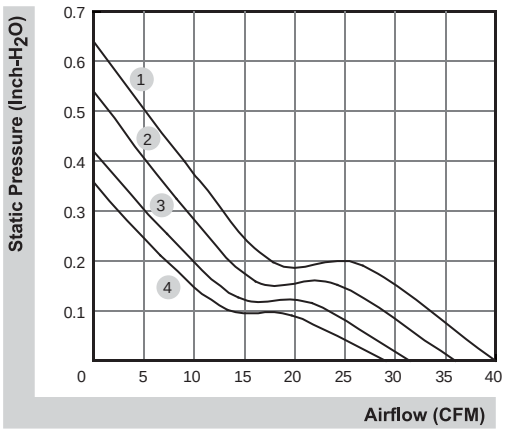

External dimensions(mm)

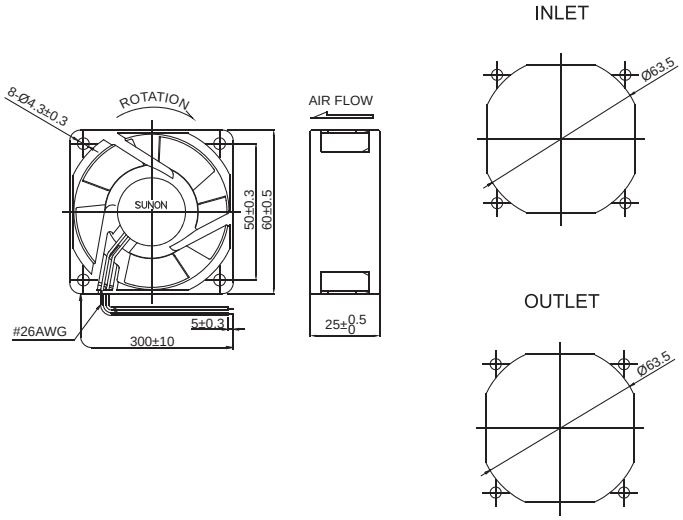

*All model could be customized. Please contact with Sunon Sales.
*Specifications are subject to change without notice. Please Visit SUNON website at http://www.sunon.com for update information.