PowerStor KR Family

Coin cell supercapacitor



Features and benefits

- High specific capacitance
- Low leakage current
- Long cycle life
- Eco-friendly

Applications

- Computers and peripherals
- Network switches and routers
- Utility meters
- HVAC Controls
- Appliances and white goods
- Real-time clock backup
- Office equipment

Description

Eaton PowerStor supercapacitors are unique, ultra-high capacitance devices utilizing electrochemical double layer capacitor (EDLC) construction combined with new, high performance materials. This combination of advanced technologies allows Eaton to offer a wide variety of capacitor solutions tailored to specific applications that range from a few microamps for several days to several milliamps for milliseconds.

Powering Business Worldwide

The PowerStor brand of supercapacitors (formerly of the Bussmann Division of Cooper Industries) is now part of Eaton's Electrical Group, Electronics Division.

PowerStor is now part of Eaton
Same great products plus even more.

Specifications

Capacitance	0.1F to 1.5F
Maximum working voltage	5.5V
Surge voltage	6.3V
Capacitance tolerance	-20% to +80% (20°C)
Operating temperature range	-25°C to 70°C
Extended operating temperature range	-25°C to 85°C (with voltage derating to 3.6V @ 85°C)

Standard Product

Capacitance (F)	Part number	Type	Lead length	Max. initial DC ESR (Ω) (Equivalent Series Resistance) measured @ 1kHz	Typical mass (g)
0.1	KR-5R5V104-R	Vertical	Standard	75	1.4
0.1	KR-5R5H104-R	Horizontal	Standard	75	1.4
0.1	KR-5R5C104-R	Cylindrical	Standard	75	3.3
0.1	KR-5R5C104H-R	Cylindrical	Short	75	3.3
0.22	KR-5R5V224-R	Vertical	Standard	75	1.4
0.22	KR-5R5H224-R	Horizontal	Standard	75	1.4
0.22	KR-5R5C224-R	Cylindrical	Standard	75	3.3
0.22	KR-5R5C224H-R	Cylindrical	Short	75	3.3
0.33	KR-5R5V334-R	Vertical	Standard	50	1.4
0.33	KR-5R5H334-R	Horizontal	Standard	50	1.4
0.33	KR-5R5C334-R	Cylindrical	Standard	50	3.3
0.33	KR-5R5C334H-R	Cylindrical	Short	50	3.3
0.47	KR-5R5V474-R	Vertical	Standard	50	1.4
0.47	KR-5R5H474-R	Horizontal	Standard	50	1.4
0.47	KR-5R5C474-R	Cylindrical	Standard	50	3.3
0.47	KR-5R5C474H-R	Cylindrical	Short	50	3.3
1.0	KR-5R5V105-R	Vertical	Standard	30	4.2
1.0	KR-5R5H105-R	Horizontal	Standard	30	4.2
1.0	KR-5R5C105-R	Cylindrical	Standard	30	9.1
1.0	KR-5R5C105H-R	Cylindrical	Short	30	9.1
1.5	KR-5R5V155-R	Vertical	Standard	30	4.2
1.5	KR-5R5H155-R	Horizontal	Standard	30	4.2
1.5	KR-5R5C155-R	Cylindrical	Standard	30	9.1
1.5	KR-5R5C155H-R	Cylindrical	Short	30	9.1

Performance

Parameter	Capacitance Change (% of initial value)	ESR (% of max. initial value)
Life — 70°C @ 5.5Vdc, 1000 hours	≤ 30%	≤ 400%
Life — 85°C @ 3.6Vdc, 2000 hours	≤ 30%	≤ 400%
Storage Life — -25°C to +70°C, 1000 hours	≤ 30%	≤ 400%

Dimensions (mm)

KR-5R5V104/224/334/474-R

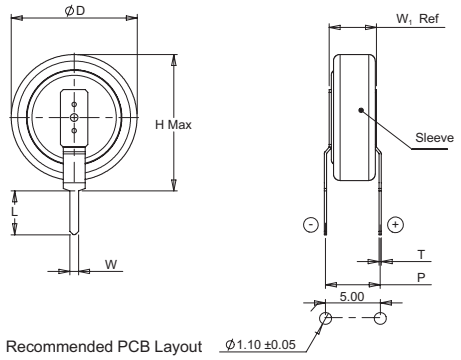

KR-5R5V105/155-R

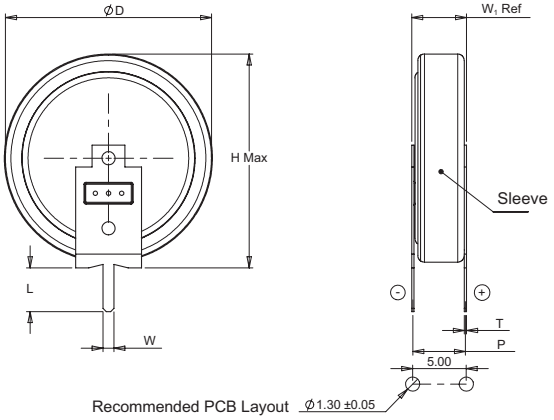

Part Number	Ø D ±0.2	H Max	L ±0.1	P ±0.3	T	W±0.1	W1 Ref.
KR-5R5V104-R	11.5	12.7	4.0	5.0	0.2	0.8	4.3
KR-5R5V224-R	11.5	12.7	4.0	5.0	0.2	0.8	4.3
KR-5R5V334-R	11.5	12.7	4.0	5.0	0.2	0.8	4.3
KR-5R5V474-R	11.5	12.7	4.0	5.0	0.2	0.8	4.3
KR-5R5V105-R	19.0	19.7	4.0	5.0	0.2	1.0	5.0
KR-5R5V155-R	19.0	19.7	4.0	5.0	0.2	1.0	5.0

KR-5R5H104/224/334/474-R

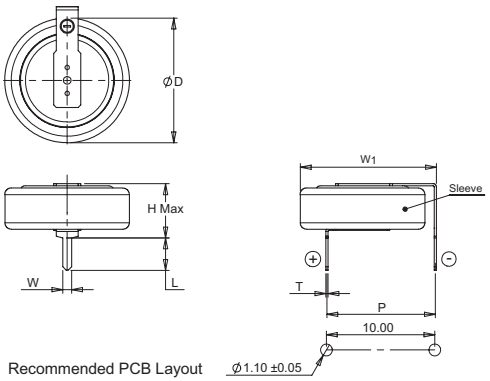

KR-5R5H105/155-R

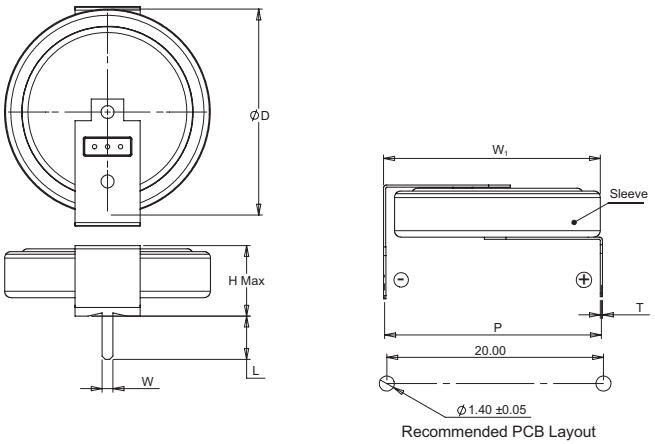

Part Number	Ø D ±0.2	H Max	L ±0.1	P	T	W±0.1	W1 ±0.5.
KR-5R5V104-R	11.5	5.2	3.0	10.0±0.3	0.2	0.8	12.4
KR-5R5V224-R	11.5	5.2	3.0	10.0±0.3	0.2	0.8	12.4
KR-5R5V334-R	11.5	5.2	3.0	10.0±0.3	0.2	0.8	12.4
KR-5R5V474-R	11.5	5.2	3.0	10.0±0.3	0.2	0.8	12.4
KR-5R5V105-R	19.0	6.7	4.0	20.0±0.5	0.2	1.0	20.0
KR-5R5V155-R	19.0	6.7	4.0	20.0±0.5	0.2	1.0	20.0

Dimensions (mm)

KR-5R5C104/224/334/474-R

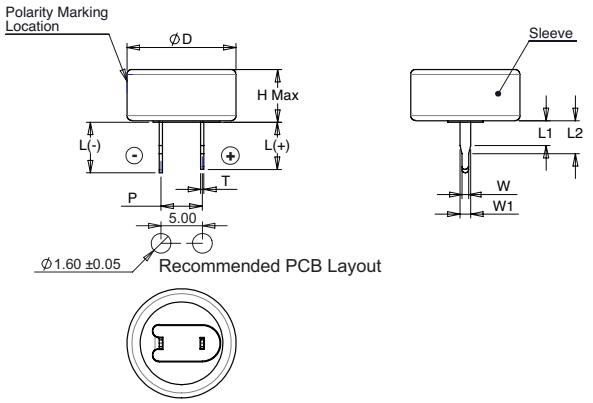

KR-5R5C105/155-R

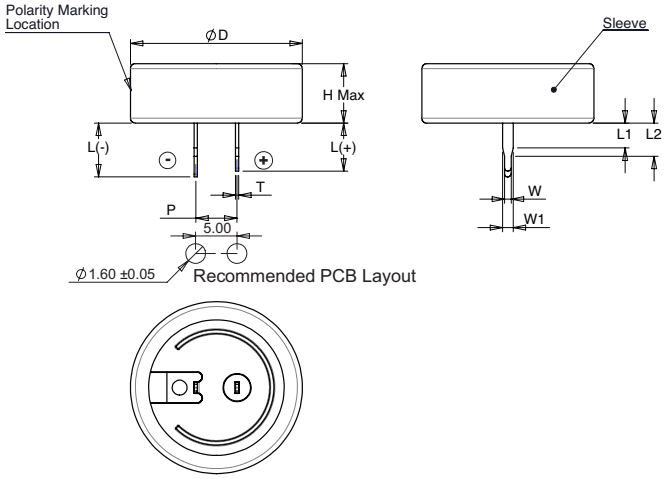

C Type (cylindrical)

Part Number	Ø D Max	H Max	L (-) ±0.2	L (+) ±0.2	P ±0.3	T ±0.05	L1 ±0.10	L2 ±0.10	W ±0.06	W1 ±0.06
KR-5R5C104-R	13.5	6.4	6.1	5.7	5.0	0.4	3.0	4.0	0.8	1.3
KR-5R5C104H-R	13.5	6.4	3.3	3.3	5.0	0.4	0.9	1.9	0.8	1.3
KR-5R5C224-R	13.5	6.4	6.1	5.7	5.0	0.4	3.0	4.0	0.8	1.3
KR-5R5C224H-R	13.5	6.4	3.3	3.3	5.0	0.4	0.9	1.9	0.8	1.3
KR-5R5C334-R	13.5	6.4	6.1	5.7	5.0	0.4	3.0	4.0	0.8	1.3
KR-5R5C334H-R	13.5	6.4	3.3	3.3	5.0	0.4	0.9	1.9	0.8	1.3
KR-5R5C474-R	13.5	6.4	6.1	5.7	5.0	0.4	3.0	4.0	0.8	1.3
KR-5R5C474H-R	13.5	6.4	3.3	3.3	5.0	0.4	0.9	1.9	0.8	1.3
KR-5R5C105-R	21.5	6.9	6.5	5.8	5.0	0.4	3.0	4.0	0.8	1.3
KR-5R5C105H-R	21.5	6.9	3.3	3.3	5.0	0.4	0.8	1.8	0.8	1.3
KR-5R5C155-R	21.5	6.9	6.5	5.8	5.0	0.4	3.0	4.0	0.8	1.3
KR-5R5C155H-R	21.5	6.9	3.3	3.3	5.0	0.4	0.8	1.8	0.8	1.3

Part numbering system

KR	**—**	**5**	**R**	**5**	☐	☐ ☐	☐	**H***	**-R**
Family Code		Voltage (V) R = Decimal			Configuration	Capacitance (µF)		Short lead length	RoHS Compliant
						Value	Multiplier		
		5R5 = 5.5V			V = Vertical H = Horizontal C=Cylindrical	Example: 474 = 47 x 104µF or 0.47F			

* Applies to cylindrical part numbers only. If ordering vertical or horizontal types, or standard lead length on cylindrical type, omit "H" from part number.

Packaging information

- Standard packaging: 500 pieces per package
- For 0.1F to 0.47F, 500 pieces per bag
- For 1.0F to 1.5F, 100 pieces per tray, 5 trays per box

Part marking

- Manufacturer
- Capacitance (F)
- Max operating voltage (V)
- Polarity

Life Support Policy: Eaton does not authorize the use of any of its products for use in life support devices or systems without the express written approval of an officer of the Company. Life support systems are devices which support or sustain life, and whose failure to perform, when properly used in accordance with instructions for use provided in the labeling, can be reasonably expected to result in significant injury to the user.

Eaton
Electronics Division
1000 Eaton Boulevard
Cleveland, OH 44122
United States
www.eaton.com/elx

© 2015 Eaton
All Rights Reserved
Printed in USA
Publication No. 4327
April 2015

Eaton is a registered trademark.

All other trademarks are property of their respective owners.

Powering Business Worldwide