Type: BZCT035, 050, 070, 120, 160, 210 & 300

Circular Toroids (Zero Current Transformers)



- For use in conjunction with Broyce "Type A" Earth Leakage Relays
- Designed to detect leakage current and transmit a proportional signal to an Earth Leakage Relay
- Surface mounting with 4 fixing slots (BZCT160 and 210 supplied with separate mounting feet)
- BZCT300 designed for direct attachment to cables
- Slim design
- DIN Rail fixing clip available for 35mm ∅ toroid (Part no. BZCT035/CP)



DIN Rail clip fitted to BZCT035

ISO 9001:2015
Cert. No. 14125771

INSTALLATION

Installation work must be carried out by qualified personnel.

- BEFORE INSTALLATION, ISOLATE THE SUPPLY TO THE CABLES THAT ARE TO BE PASSED THROUGH THE TOROID.
- Installation of the toroid, along with the Earth Leakage Relay must be carried out in accordance with the latest wiring practices and regulations.

CONNECTION DIAGRAM

Typical connection examples are shown below.

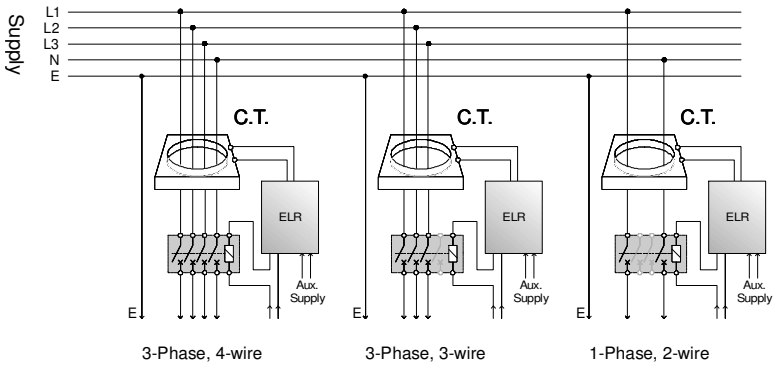

TECHNICAL SPECIFICATION

Size availability* and part number: ** internal diameter*	**35mm ∅** (BZCT035) **50mm ∅** (BZCT050) **70mm ∅** (BZCT070) **120mm ∅** (BZCT120)	**160mm ∅** (BZCT160) **210mm ∅** (BZCT210) **300mm ∅** (BZCT300)
Rated system voltage:	720V AC	
Insulation level:	3kV AC	
Current ratio:	1/1000	
Rated operational current (I.e.):	BZCT035 – **65A** (25mm²) BZCT050 – **85A** (50mm²) BZCT070 – **160A** (95mm²) BZCT120 – **250A** (240mm²)	BZCT160 – **320A** (400mm²) BZCT210 – **400A** (500mm²) BZCT300 – **630A** (630mm²)
Max. cross-section/phase cable size shown in brackets and assumes 3P + N copper cables		
Max. permissible current:	1kA cont., 5kA for 1.5s, 100kA for 0.05s	
Minimum ELR trip setting (IΔn) based on toroid size:	0.006A - 35 and 50mm ∅ 0.03A - 70mm ∅ 0.1A - 120 and 160mm ∅ 0.3A - 210mm ∅ 0.5A - 300mm ∅	
Max. Distance	50m (max.) *Between toroid and ELR*	
Ambient temperature: Relative humidity:	-20 to +60°C +95%	
Housing:	**35…210mm** Grey ABS	**300mm** Tape wrapped
Mounting option:	**35…210mm** Surface mount only using fixing slots provided (BZCT160 and 210 require separate mounting feet which are included)	**300mm** Directly on to cables secured in place using cable ties (not supplied)
Terminal conductor size:	**35…210mm** ≤ 2.5mm² solid ≤ 1.5mm² stranded	**300mm** Mounting lug (x2) with 6mm hole. Requires suitable crimp (not supplied)
Approvals:	CE & UKCA Compliant. Conforms to: IEC61869 parts 1 and 2	

INSTALLATION GUIDANCE

Correct installation of the Earth Leakage Relay and toroid should ensure trouble free operation, in particular, if this document is followed.

1. Always ensure the Earth conductor DOES NOT pass through the toroid. If this is unavoidable, the Earth must be routed back through the toroid again and around, as shown in Fig.1.
2. **DO NOT** pass individual conductors through separate toroid's as shown in Fig. 3.
3. Ensure the cable is central in the toroid (see Fig. 4).
4. As a rule, select a toroid that has an inside diameter which is twice that or greater than the outsider diameter of the cable(s) to be passed through (see Fig. 5).
5. Place the toroid on a straight section of cable, not near a Bend (see Fig. 6).
6. Keep the cable and toroid away from intense magnetic Fields from nearby equipment.

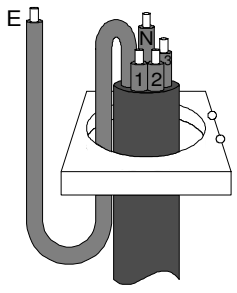

Fig. 1

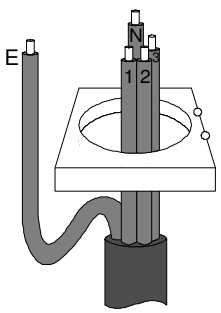

Fig. 2

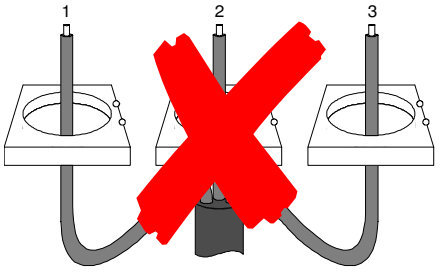

Fig. 3

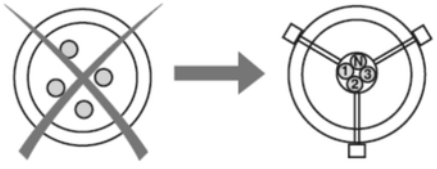

Fig. 4

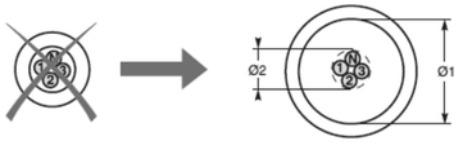

Fig. 5

∅1 ≥ 2 x ∅2

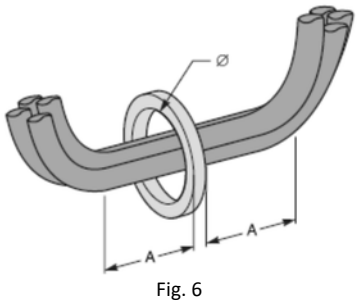

Fig. 6

A ≥ ∅

Broyce Control Ltd., Pool Street, Wolverhampton, West Midlands WV2 4HN. England
Tel: +44 (0) 1902 773746 Fax: +44 (0) 1902 420639 Email: sales@broycecontrol.com Web: www.broycecontrol.com

The Information provided in this literature is believed to be accurate (subject to change without prior notice); however, use of such information shall be entirely at the user's own risk.

- ***DIMENSIONS***

Toroid Type:	AØ	B	C	D	E	F	Weight
BZCT035	35	64	74	40	20	32	77g
BZCT050	50	63	98	40	20	42	88g
BZCT070	70	105	117	40	20	53	135g
BZCT120	120	155	170	40	20	80	265g
BZCT160	160	150	253	60^	33	120	1075g
BZCT210	210	149	304	60^	33	145	1300g
BZCT300	300	-	370	-	40	-	3800g

Dimensions in mm ^ exc. mounting feet

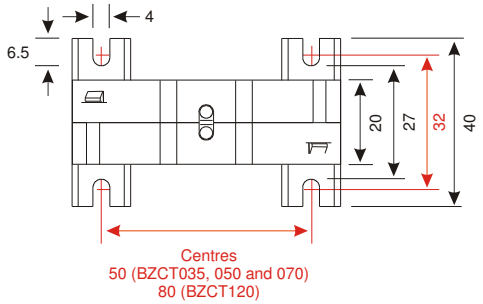

BZCT035

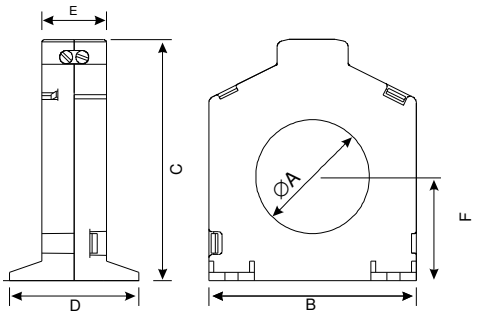

BZCT050, 070, 120, 160 & 210

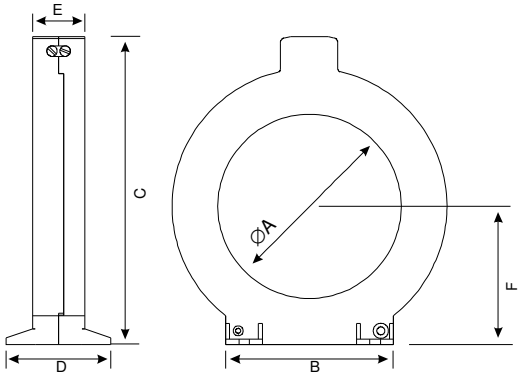

BZCT300

(Tape wound)

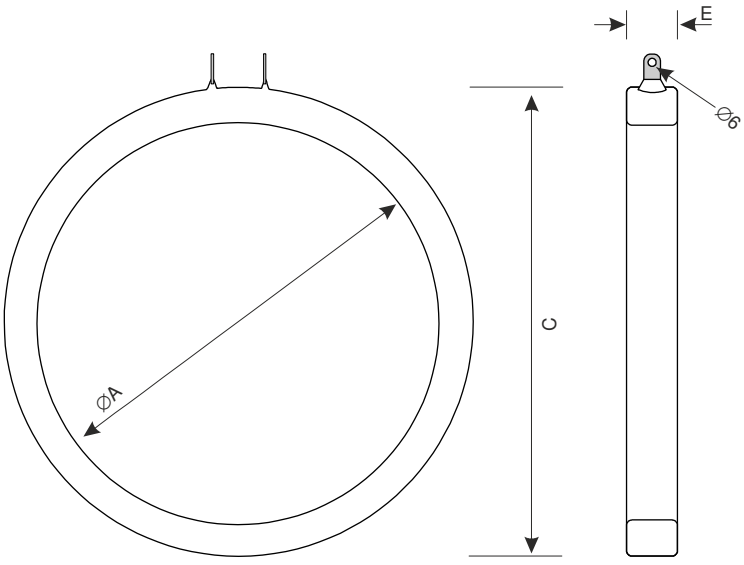

The Information provided in this literature is believed to be accurate (subject to change without prior notice); however, use of such information shall be entirely at the user's own risk.