Overview Return-Line Filters 68

RF / RFA / RFB / RFS / RFS-D / RTF / RTF-N



Return-Line Filters **RF** **69 - 76**
Max. 16 bar / 232 PSI
Max. 500 l/min / 130 US GPM

Technical Data / Dimensions **70 - 71**

Order Code - Return-Line Filter **72**

Order Code - Filter Elements **72**

Options - Clogging Indicators **73 - 74**

Flow Characteristics **75 - 76**



Return-Line Filters **RFA** **77 - 83**
Max. 25 bar / 365 PSI
Max. 110 l/min / 30 US GPM

Technical Data / Dimensions **78 - 79**

Order Code - Return-Line Filter **80**

Order Code - Filter Elements **80**

Options - Clogging Indicators **81 - 82**

Flow Characteristics **83**

Checklist for the selection of filter housings **84**



Return-Line Filters **RFB** **85 - 91**
Max. 10 bar / 145 PSI
Max. 185 l/min / 52 US GPM

Technical Data / Dimensions **86 - 87**

Order Code - Return-Line Filter **88**

Order Code - Filter Elements / Air Filter Elements **88**

Options - Clogging Indicators **89 - 90**

Flow Characteristics **91**

Checklist for the selection of filter housings 92



Return-Line Filters **RFS / RFS-D** 93 - 102
Max. 25 bar / 365 PSI
Max. 1135 l/min / 300 US GPM



Technical Data / Dimensions 94 - 97

Order Code - Return-Line Filter 98

Order Code - Filter Elements 98

Options - Clogging Indicators 99 - 100

Flow Characteristics 101 - 102



Return-Line Filters **RTF-10/15/25** 103 - 106
Max. 6,9 bar / 100 PSI
Max. 95 l/min / 25 US GPM

Technical Data / Dimensions 104 - 105

Order Code - Return-Line Filter 106

Order Code - Filter Elements 106



Return-Line Filters **RTF-20** 107 - 110
Max. 6,9 bar / 100 PSI
Max. 115 l/min / 30 US GPM

Technical Data / Dimensions 108 - 109

Order Code - Return-Line Filter 110

Order Code - Filter Elements / Air Filter Elements 110



Return-Line Filters **RTF-40** 111 -114
Max. 6,9 bar / 100 psi
Max. 378 l/min / 100 US GPM

Technical Data / Dimensions 112 - 113

Order Code - Return-Line Filter 114

Order Code - Filter Elements 114



Return-Line Filters **RTF-50** 115 - 118
Max. 6,9 bar / 100 psi
Max. 379 l/min / 100 US GPM

Technical Data / Dimensions 116 - 117

Order Code - Return-Line Filter 118

Order Code - Filter Elements 118



Return-Line Filters **RTF-N** 119 - 122
Max. 10 bar / 145 psi
Max. 500 l/min / 132 GPM

Technical Data / Dimensions 120 - 121

Order Code - Return-Line Filter 122

Order Code - Filter Elements 122

Flow Characteristics 123 - 124

RTF

Options - Clogging Indicators 125

D

D

Description

STAUFF Return-Line Filters were designed as filters for tank-top mounting, tank-inside mounting or inline mounting. They filter the hydraulic oil before it flows back into the reservoir. This ensures that contamination arising in the components does not get into the tank. Return-Line filters maintain the targeted purity class like Pressure Filters. However, because of their arrangement, they do not fulfil the additional function of a protection filter. In contrast to a Pressure Filter, it only has to withstand low pressure levels.

The practical design of STAUFF Return-Line Filters enables quick assembly as well as easy exchange of the filter elements.

Media Compatibility

- Mineral oils, others on request

Options and Accessories

Valves

- Bypass valve integrated in the filter element (except STAUFF Return-Line Filter RTF)

Clogging Indicators

- On request with visual clogging indicator or electrical clogging switch
- Others on request



Type RF

- Filter bowl with option of thread connection (e.g. STAUFF Diffuser SRV) or leakage oil connection

- Operating pressure: max. 16 bar / 232 PSI
- Nominal flow rate: max. 500 l/min / 130 US GPM
- Materials: Glass Fibre reinforced Polyamide / Aluminium
- Connections: BSP, NPT, SAE thread or SAE flange (ISO 6162-1)



Type RFA

- Filter bowl with option of thread connection (e.g. STAUFF Diffuser SRV) or leakage oil connection

- Operating pressure: max. 25 bar / 365 PSI
- Nominal flow rate: max. 110 l/min / 30 US GPM
- Materials: Filter housing: Aluminium
- Connection: SAE thread



Type RFB

- Low weight and compact design
- Filter bowl with option of thread connection
- Filter head with option of integrated air filter

- Operating pressure: max. 10 bar / 145 PSI
- Nominal flow rate: max. 185 l/min / 52 US GPM
- Materials: Filter head: Aluminium, Filter bowl: PA
- Connections: BSP, NPT, SAE thread



Type RFS and RFS-D

- Robust design, suitable for high flow rates
- Filter bowl with option of BSP or SAE flange

- Operating pressure: max. 25 bar / 365 PSI
- Nominal flow rate: max. 1135 l/min / 300 US GPM
- Materials: Filter head and bowl: Steel
- Connections: BSP or SAE flange (ISO 6162-1)



Type RTF

- Filter bowl is designed to return the oil beneath the surface thus preventing entrainment of air
- Filter head with option of integrated air filter

- Operating pressure: max. 10 bar / 49 PSI
- Nominal flow rate: max. 380 l/min / 100 US GPM
- Materials: Filter head: Aluminium, Filter bowl: PA or Steel
- Connection: BSP or NPT, others on request



Type RTF-N

- Return-Line insert filter
- Custom reservoir design with an in-tank filtering system
- Magnetic pre-filtration

- Operating pressure: max. 10 bar / 145 PSI
- Nominal flow rate: max. 500 l/min / 132 US GPM
- Materials: Flange plate: Aluminium, Magnet rod / Bypass / Diffuser: Steel

Return-Line Filters ▪ Type RF



RF-014/030 and RF-045/070



RF-090/130

D

Product Description

STAUFF RF Return-Line Filters are designed as tank top filters. They are mounted directly on the tank top and when 100% of the system's oil is filtered they provide the optimum removal of contaminant from the system. This provides the pump with clean oil thus reducing contaminant generated wear. The filter bowl is designed to return the oil beneath the surface thus preventing the entrainment of air by the returning oil. A high efficiency of contaminant removal is assured by using STAUFF RE Replacement Filter Elements. The high dirt-hold capacity of STAUFF Elements ensures a long service life and as a result reduced maintenance costs.

Technical Data

Construction
- Tank Top mounting

Materials
- Cover: RF-014/030 and RF-045/070: Glass Fibre reinforced Polyamide
  RF-090/130: Aluminium
- Filter head: Aluminium
- Filter bowl: Glass Fibre reinforced Polyamide
- Sealings: NBR (Buna-N®)
  FKM (Viton®)
  EPDM (Ethylene-Propylene-Diene-Monomer-Rubber)
  Other sealing materials on request

Port Connections
- BSP
- NPT
- SAE O-ring thread
- SAE flange 3000 PSI

Operating Pressure
- Max. 16 bar / 232 PSI

Temperature Range
- -20 °C ... +100 °C / -44 °F ... +212 °F
  (Short term up to +110°C / +230 °F)

Filter Elements
- Specifications see page 6

Media Compatibility
- Mineral oils, other fluids on request

Options and Accessories

Valve
- Bypass valve (integrated in the filter element): Opening pressure 3 bar ± 0,3 bar / 43.5 PSI ± 4.35 PSI
  Other settings available on request

Clogging Indicators
- For clogging indicator types please see page 7+8

Return-Line Filters ▪ Type RF

D

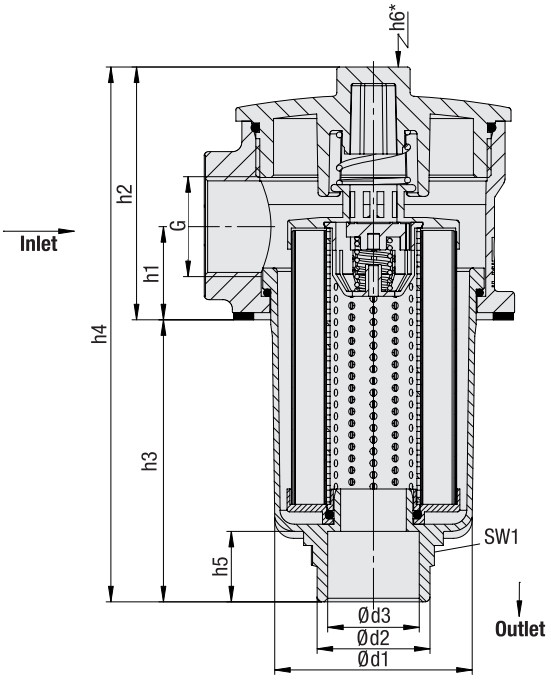

RF-014/030 and RF-045/090

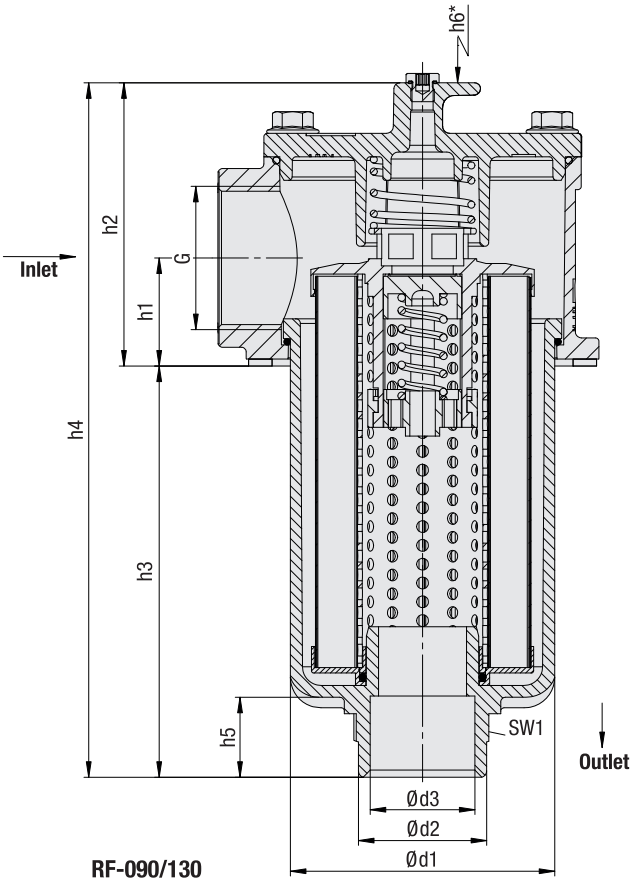

RF-090/130

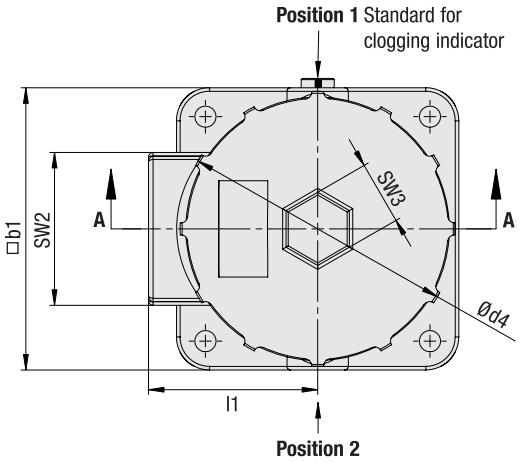

RF-014/030 and RF-045/090

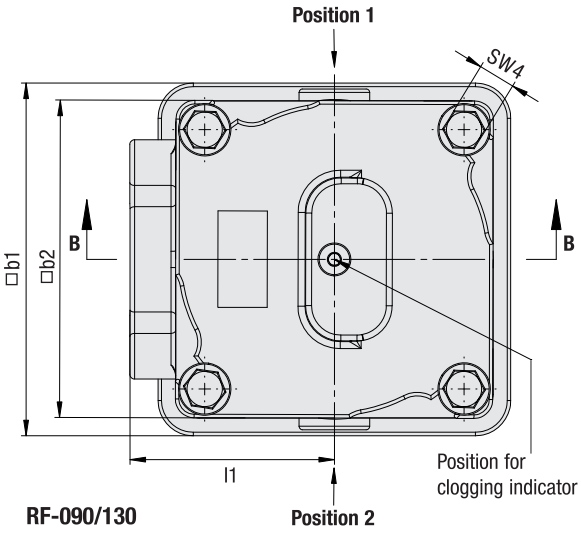

RF-090/130

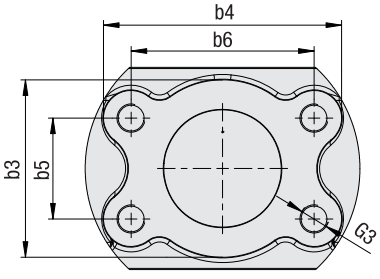

Flange Connection

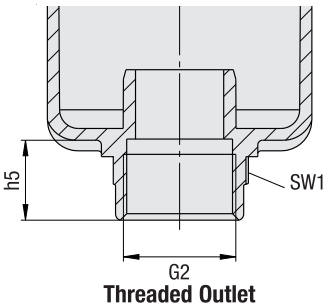

Threaded Outlet

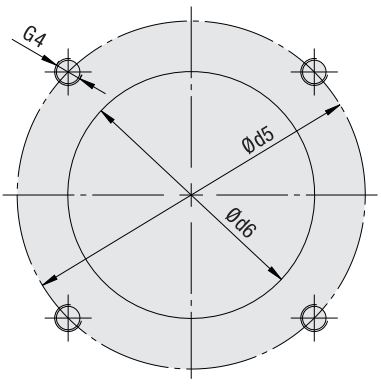

Mounting Detail

Return-Line Filters ▪ Type RF

Connection Style G	Filter Size RF											
	014		030		045		070		090		130	
BSP	3/4	1	3/4	1	1-1/4	1-1/2	1-1/4	1-1/2	1-1/2	2	1-1/2	2
NPT	1		1		1-1/2		1-1/2		2		2	
SAE O-ring Thread	1-5/16–12		1-5/16–12		1-5/8–12		1-5/8–12		1-7/8–12		1-7/8–12	
SAE Flange 3000 PSI	-		-		-		-		2		2	

Dimensions (mm/in)	Filter Size RF					
	014	030	045	070	090	130
b1	89	89	120	120	150	150
	3.50	3.50	4.72	4.72	5.91	5.91
b2	-	-	-	-	75,5	75,5
					2.97	2.97
b3	-	-	-	-	101	101
					3.98	3.98
b4	-	-	-	-	42,9	42,9
					1.69	1.69
b5	-	-	-	-	77,8	77,8
					3.06	3.06
d1	57,5	57,5	84	84	112,5	112,5
	2.26	2.26	3.31	3.31	4.43	4.43
d2	36	36	48	48	54,5	54,5
	1.42	1.42	1.89	1.89	2.15	2.15
d3	17	17	28	28	37,5	37,5
	.67	.67	1.10	1.10	1.48	1.48
d4	89	89	117	117	-	-
	3.50	3.50	4.60	4.60		
d5	100	100	135	135	170	170
	3.94	3.94	5.31	5.31	6.69	6.69
d6	65	65	92	92	118	118
	2.56	2.56	3.62	3.62	4.65	4.65
h1	33	33	41	41	47	47
	1.30	1.30	1.61	1.61	1.85	1.85
h2	89,5	89,5	107,5	107,5	120,5	120,5
	3.52	3.52	4.23	4.23	4.74	4.74
h3	91,5	159,5	119	180	172,5	252,5
	3.60	6.28	4.69	7.09	6.79	9.94
h4	181,5	249,5	227,5	288,5	295,4	375,4
	7.15	9.82	8.96	11.36	11.63	14.78
h5	23,5	23,5	24	24	27	27
	.93	.93	.95	.95	1.06	1.06
h6	140	210	180	240	235	315
	5.51	8.27	7.09	9.45	9.25	12.4
l1	54	54	72	72	86	86
	2.13	2.13	2.83	2.83	3.39	3.39
G2	G1 or 1 NPT	G1 or 1 NPT	G1-1/4 or 1-1/4 NPT	G1-1/4 or 1-1/4 NPT	G1-1/2 or 1-1/2 NPT	G1-1/2 or 1-1/2 NPT
G3	-	-	-	-	M12x20 or 1/2–13 UNC x 20	M12x20 or 1/2–13 UNC x 20
G4	M6 or 1/4–20 UNC	M6 or 1/4–20 UNC	M8 or 5/16–18 UNC	M8 or 5/16–18 UNC	M10 or 3/8–16 UNC	M10 or 3/8–16 UNC
SW1	36	36	50	50	55	55
	1.42	1.42	1.97	1.97	2.16	2.16
SW2	50	50	65	65	-	-
	1.97	1.97	2.56	2.56		
SW3	22	22	27	27	-	-
	0.87	.87	1.06	1.06		
SW4	-	-	-	-	15	15
					.59	.59

D

D

Return-Line Filter Housings / Complete Filters ▪ Type RF

RF - 070 - G - 10 - B - G24 - G42NO - D - O / 2

① ② ③ ④ ⑤ ⑥ ⑦ ⑧ ⑨ ⑩

① Type

Return-Line Filter	**RF**

② Group

Flow	Size
60 l/min / 14 US GPM	**014**
110 l/min / 30 US GPM	**030**
160 l/min / 45 US GPM	**045**
240 l/min / 70 US GPM	**070**
330 l/min / 90 US GPM	**090**
500 l/min / 130 US GPM	**130**

Note: Exact flow will depend on the selected filter element. For technical data please see pages9+10.

③ Filter Material

Material	max. Δp*collapse	Micron ratings available	Code
Without filter element	-	-	**O**
Inorg. glass fibre	25 bar / 363 PSI	3, 5, 10, 20	**G**
Stainless fibre	30 bar / 435 PSI		**A**
Filter paper	10 bar / 145 PSI	10, 20	**N**
Stainless mesh	30 bar / 435 PSI	25, 50, 100, 200	**S**

Note: *Collapse/burst resistance as per ISO 2941. Other materials on request.

④ Micron Rating

3 µm	**03**
5 µm	**05**
10 µm	**10**
20 µm	**20**
25 µm	**25**
50 µm	**50**
100 µm	**100**
200 µm	**200**

Note: Other micron ratings on request.

⑤ Sealing Materials

NBR (Buna®)	**B**
FKM (Viton®)	**V**
EPDM	**E**

Note: Other sealing materials on request

⑥ Connection Style

Connection Style	Thread Style	Group 014/030	Code	Group 045/070	Code	Group 090/130	Code
BSP	-	3/4	**G12**	1-1/4	**G20**	1-1/2	**G24**
	-	1	**G16**	1-1/2	**G24**	2	**G32**
NPT	-	1	**N16**	1-1/2	**N24**	2	**N32**
SAE O-ring Thread	-	1-5/16	**U16**	1-5/8	**U20**	1-7/8	**U24**
SAE Flange 3000 PSI	metric	-	**-**	-	**-**	2	**C332M**
SAE Flange 3000 PSI	UNC	-	**-**	-	**-**	2	**C332U**

⑦ Clogging Indicator

Without Clogging Indicator	**O**
Visual Clogging Indicator	**V**
Electrical Clogging Switch 42 V, NO	**G42NO**
Electrical Clogging Switch 42 V, NC	**G42NC**
Electrical Clogging Switch 110 V ... 230 V, two-way contact (only for Code W)	**G230**

⑧ Option Clogging Indicator G42NO, G42NC and G230

Blanking Screw M10x1 (Delivery standard)	**O**
M12 x 1,5	**M12**
AMP plug	**A**
Deutsch plug	**D**
Rubber boot	**S**
90 degree Polyamide cap (only for Code G230)	**W**

⑨ Outlet Style

Size	Connection thread	Code
all	Without thread (Standard outlet)	**O**
014 / 030	1" BSP / 1" NPT	**G16 / N16**
045 / 070	1 1/4 BSP / 1 1/4 NPT	**G20 / N20**
090 / 130	1 1/2 BSP / 1 1/2 NPT	**G24 / N24**

⑩ Design Code

Only for information	**2**

Note: Leakage Oil Connection on request. Please see page 8.

Filter Elements ▪ Type RE

RE - 014 - G - 10 - B / X

① ② ③ ④ ⑤ ⑥

① Type

Filter Element Series	**RE**

② Group

According to filter housing

③ Filter Material

Material	Max. Δp*collapse	Micron ratings available	Code
Inorg. glass fibre	25 bar / 363 PSI	3, 5, 10, 20	**G**
Stainless fibre	30 bar / 435 PSI		**A**
Filter paper	10 bar / 145 PSI	10, 20	**N**
Stainless mesh	30 bar / 435 PSI	25, 50, 100, 200	**S**

Note: *Collapse/burst resistance as per ISO 2941. Other materials on request.

④ Micron Rating

3 µm	**03**
5 µm	**05**
10 µm	**10**
20 µm	**20**
25 µm	**25**
50 µm	**50**
100 µm	**100**
200 µm	**200**

Note: Other micron ratings on request.

⑤ Sealing Materials

NBR (Buna®)	**B**
FKM (Viton®)	**V**
EPDM	**E**

Note: Other sealing materials on request.

⑥ Design Code

Only for information	**X**

Return-Line Filters ▪ Type RF

Electrical Clogging Switch

The switch is used where an electrical signal is needed to indicate when the element needs to be changed. The switch can turn on a light, or shut the machine down, or any further function controlled by an electric signal. The switching pressure is 2,5 bar / 36.25 PSI and this allows the element to be changed before the bypass setting of 3 bar / 43.5 PSI is reached.

Standard type with plug connector and rubber cap. Available with DEUTSCH DT04-2P plug (industrial standard), AMP Junior Timer plug (industrial standard) and five-pin circular connector M12, A-coded, according to IEC 61076-2-101.

Technical Data

	Limit-Switch G42NO+NC	Limit-Switch G230
Switching Capacity	100 VA	1000 VA
Voltage	10…42 VAC/DC	10…250 VAC/DC
Current	10mA…4A	
Switching Accuracy	± 0,5 bar at room temp. and new state	
Switching Frequency	200/min	
max. Pressure Ramp Rate	≤ 1 bar/ms	
Degree of Protection	IP65 (plug type S and W), IP67 (plug type M12, A, D)	
Temperature Range	-30°C … +100°C	-40°C … +100°C

Order Code

Limit-Switch - **G42NO** - **S** - **M10** - **B2.5**

① ② ③ ④ ⑤

① Type

Limit-Switch	

② Connector Type

Electrical Clogging Switch 42 V, NO	**G42NO**
Electrical Clogging Switch 42 V, NC	**G42NC**
Electrical Clogging Switch 110 V ... 230 V, two-way contact (only for Plug Type W)	**G230**

③ Plug Type

M12 Five-Pin Connector according to IEC 61076-2-101	**M12**
AMP-Junior-Timer Plug	**A**
DEUTSCH Plug DT04-2P	**D**
Rubber boot	**S**
90 degree Polyamide cap (only for Connector Type G230)	**W**

④ Thread Type

M10 x 1 con.	**M10**

⑤ Pressure Setting

2,5 bar / 36.3 PSI	**B2.5**

Dimensions Plug Type

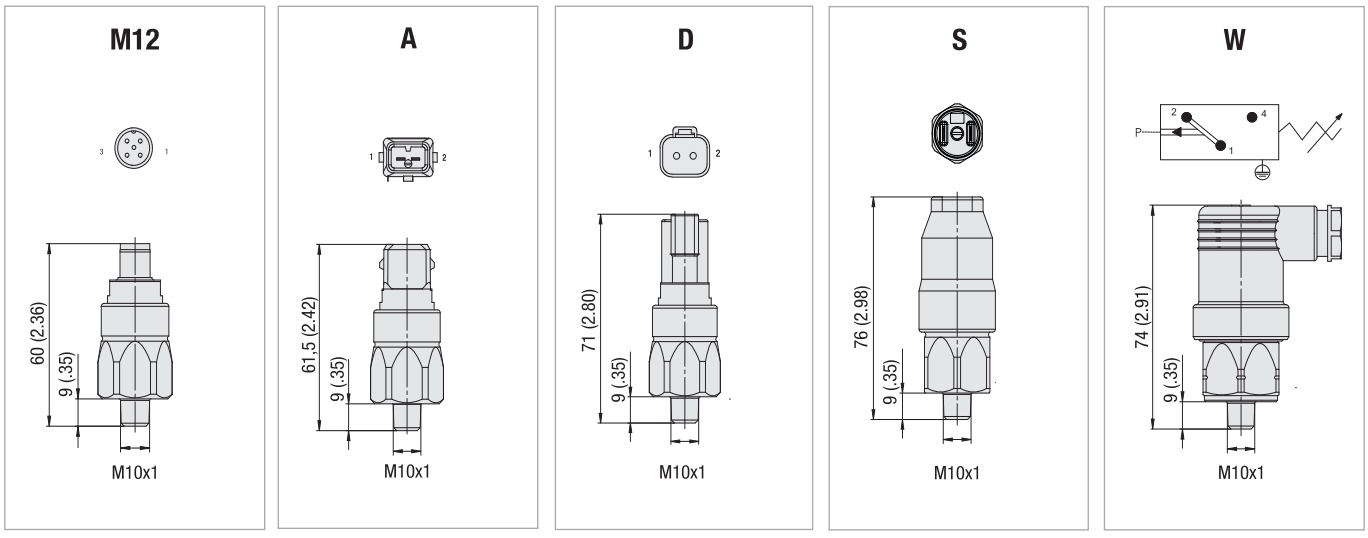

Note: The customer / user carries the responsibility for the electrical connection.

Dimensional drawings: All dimensions in mm/in.

Return-Line Filters ▪ Type RF

Visual Clogging Indicator

The gauge visually displays the degree of contamination of the element.
The colored segments allow quick visual checking.

green	0 ... 2,5 bar / 0 … 36.25 PSI	Element has service life left
yellow	2,5 ... 3,0 bar / 36.25 ... 43.5 PSI	Element is contaminated and should be changed
red	>3,0 bar / >43.5 PSI	Bypass valve open, unfiltered oil passing to tank

Order Codes

SPG-C-040-00004-02-P-M10-402922

①

① Type

Visual Clogging Indicator	**SPG-C-040-00004-02-P-M10-402922**

Visual Clogging Indicator



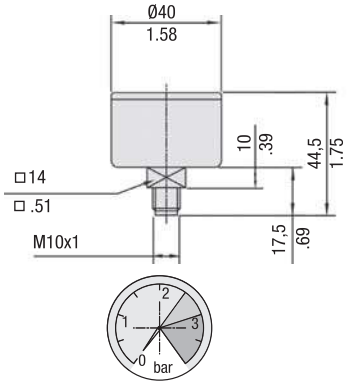

Filter Bowl with Threaded Connection

Under some circumstances such as a tall reservoir or one with oil levels which vary greatly during operation, it is necessary to extend the filter bowl so that the returning oil returns beneath the surface and does not entrain air in the process.
The optional bowl with a female thread allows an extension to be fitted quite simply.

Threaded Outlet

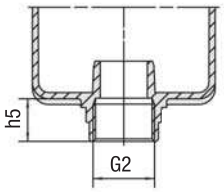

Dimensions see table page 5

Leakage Oil Connection

Leakage oil connections can be provided at positions 1 + 2 (see page 4). Time-consuming installation of the leakage oil lines through the reservoir lid is no longer necessary and it is ensured that no unfiltered liquid gets back into the reservoir.

RF-014 to 070: G1/4 resp. 1/4 NPT
RF-090/130: up to max. G1/2 resp. 1/2 NPT

Leakage Oil Connection

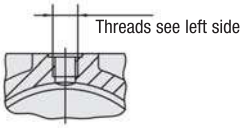

Filter Bowl with Threaded Connection and Diffuser

Diffusers mounted to the filter bowl minimise foaming and reduce noise of high Return-Line flows. For further details on STAUFF Diffusers please refer to the Calatogue No. 10 - Hydraulic Accessories.
Attention: Connection pipe not included in scope of delivery!

Size SRV	for Return-Line Filter Size	Dimensions (mm/in)			
		øD	L	Thread G	Hex
SRV-114-G16	RF-014/030	60	139	G1	46
SRV-114-N16		2.36	5.47	1 NPT	1.81
SRV-200-G20	RF-045/070	82	139	G1-1/4	60
SRV-200-N20		3.23	5.47	1-1/4 NPT	2.36
SRV-227-G24	RF-090/130	82	200	G1-1/2	60
SRV-227-N24		3.23	7.87	1-1/2 NPT	2.36

Threaded Outlet with SRV

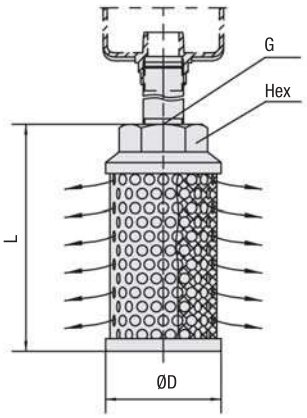

Return-Line Filters ▪ Type RF Flow Characteristics

The following characteristics are valid for mineral oils with a density of 0,85 kg/dm³ and the kinematic viscosity of 30 mm²/s (30cSt). The characteristics have been determined in accordance to ISO 3968. Multipass filter ratings have been obtained in accordance to ISO 16889. The housing pressure drop is directly proportional to the oil density. Contact STAUFF for details.

Housings RF-014/030

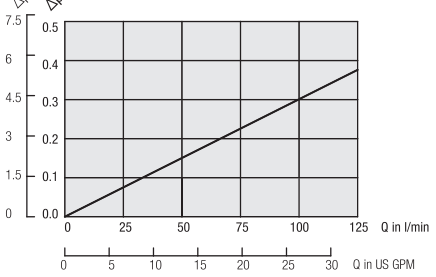

Housings RF-045/070

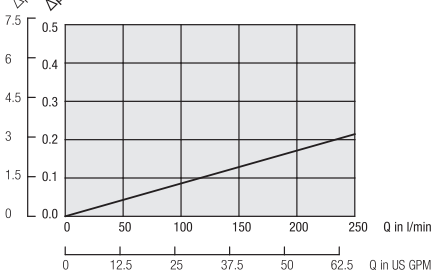

Housings RF-090/130

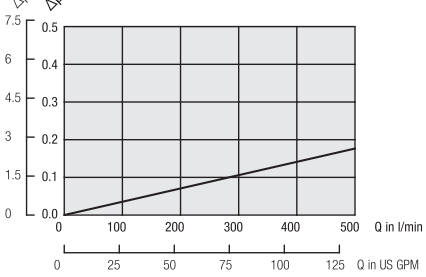

Filter Elements RE-014-G

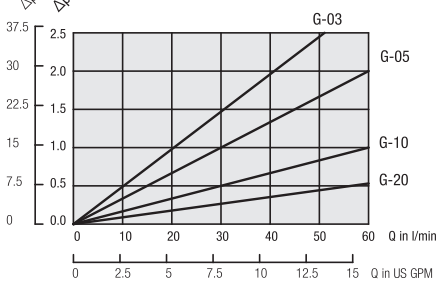

Filter Elements RE-030-G

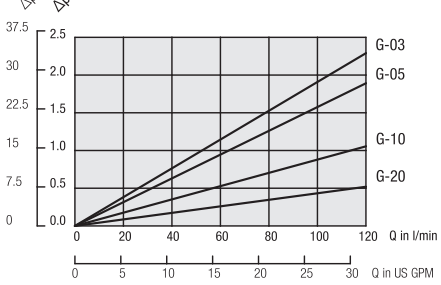

Filter Elements RE-045-G

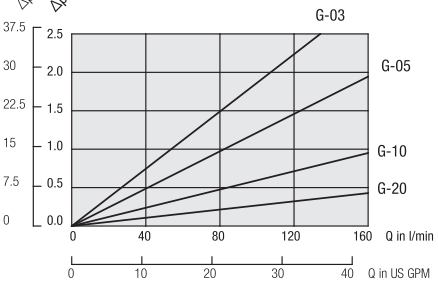

Filter Elements RE-070-G

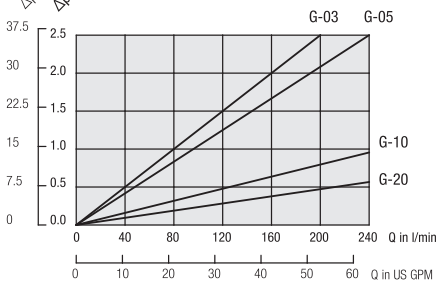

Filter Elements RE-090-G

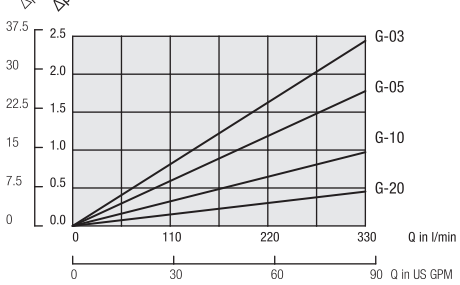

Filter Elements RE-130-G

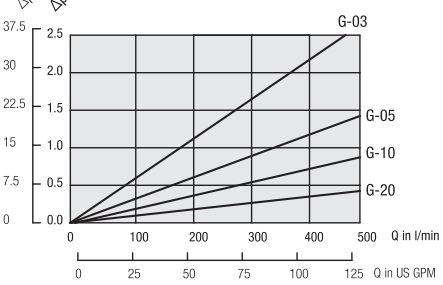

D

Return-Line Filters ▪ Type RF Flow Characteristics

The following characteristics are valid for mineral oils with a density of 0,85 kg/dm³ and the kinematic viscosity of 30 mm²/s (30cSt). The characteristics have been determined in accordance to ISO 3968. Multipass filter ratings have been obtained in accordance to ISO 16889. The housing pressure drop is directly proportional to the oil density. Contact STAUFF for details.

Filter Elements RE-014-A

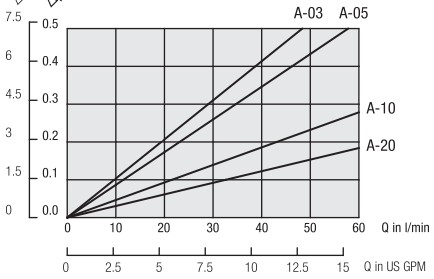

Filter Elements RE-030-A

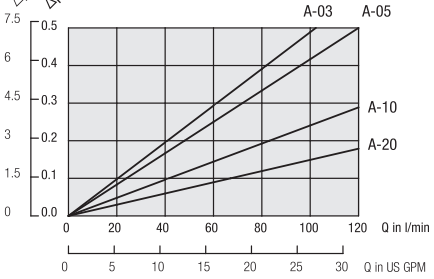

Filter Elements RE-045-A

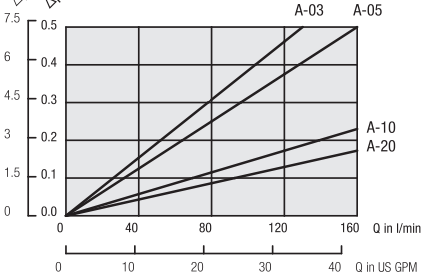

Filter Elements RE-070-A

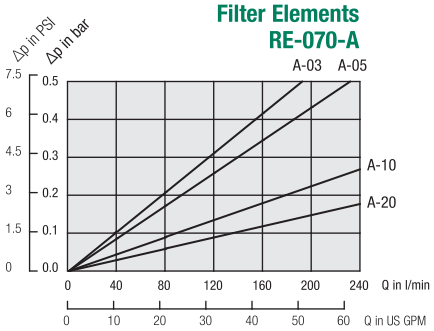

Filter Elements RE-090-A

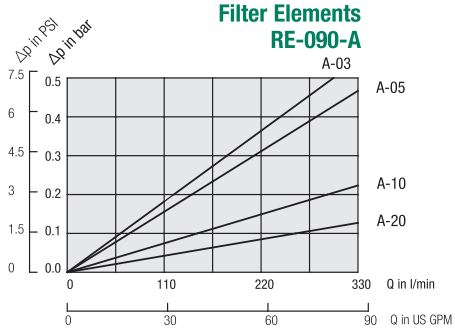

Filter Elements RE-130-A

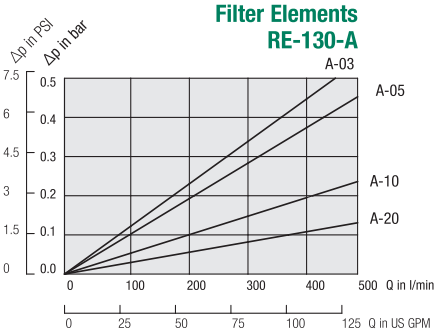

Filter Elements RE-...S

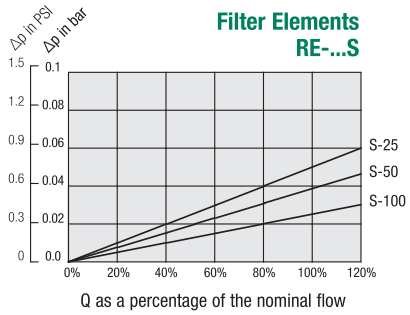

Filter Elements RE-...N

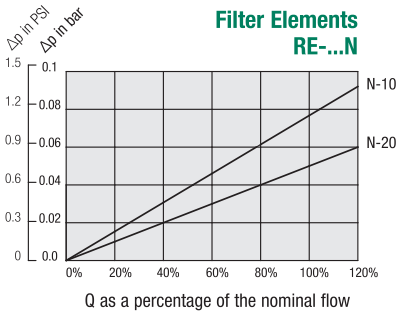

Return-Line Filters ▪ Type RFA



D

Product Description

STAUFF RFA Return-Line Filters are a one piece design and can be used as a tank top or an in-line filter. They are mounted in the Return-Line and if 100% of the system oil is filtered, provide the optimum removal of contaminant for the systems. This provides the pump with clean oil, thus reducing contaminant generated wear. A high efficiency of contaminant removal is assured by using STAUFF RE Replacement Filter Elements. The high dirt-hold capacity of STAUFF Elements ensures a long service life and as a result reduced maintenance costs. Furthermore, this housing also offers the possibility of pipeline mounting.

Technical Data

Construction
- Tank Top or in-line mounting

Materials
- Filter housing: Aluminium
- Sealings: NBR (Buna-N®)
  FKM (Viton®)
  EPDM (Ethylene Propylene Diene Monomer Rubber)
  Other sealing materials on request

Port Connections
- SAE O-ring thread
- BSP

Operating Pressure
- Max. 25 bar / 365 PSI

Temperature Range
- -20 °C ... +100 °C / -44 °F ... +212 °F
  (Short term up to +110°C / +230 °F)

Filter Elements
- Specifications see page 80

Media Compatibility
- Mineral oils, other fluids on request

Options and Accessories

Valve
- Bypass valve (integrated in the filter element): Opening pressure 3 bar ± 0,3 bar / 43.5 PSI ± 4.35 PSI
  Other settings available on request

Clogging Indicators
- For clogging indicator types please see page 81

Return-Line Filters ▪ Type RFA

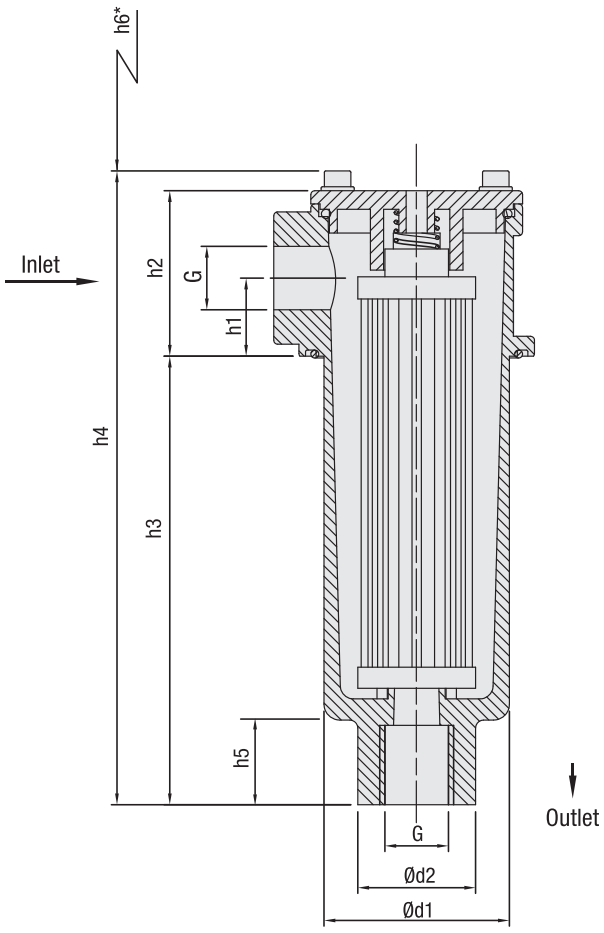

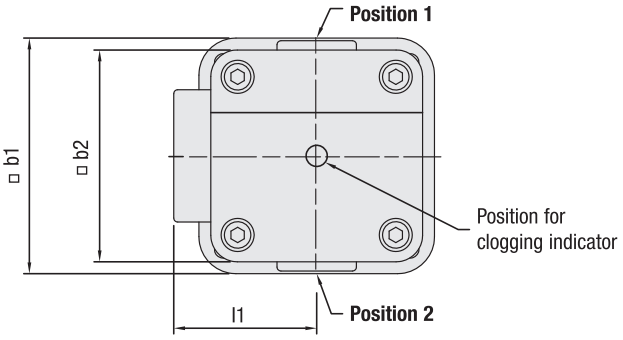

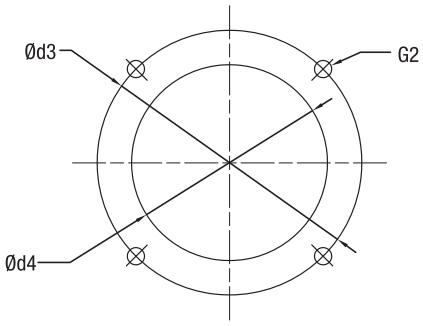

Mounting Detail

* recommended space for element change

Return-Line Filters ▪ Type RFA

Thread Connection G	Filter Size RFA-030
SAE O-ring Thread U12	1-1/16–12
SAE O-ring Thread U08	3/4–16
BSP G08	1/2
BSP G12	3/4

Dimensions (mm/in)	Filter Size RFA-030
h1	29,5
	1.16
h2	62,5
	2.46
h3	163,5
	6.44
h4	233,5
	9.19
h5	28
	1.10
h6	210
	8.27
b1	89
	3.50
b2	80
	3.15
d1	70
	2.76
d2	44,5
	1.75
d3	100
	3.94
d4	74
	2.91
l1	54
	2.16
G2	M6 or 1/4 UNC

Return-Line Filter Housings / Complete Filters ▪ Type RFA

RFA - 030 - G - 10 - B - G08 - G42NO - D - O - L1 / X

① ② ③ ④ ⑤ ⑥ ⑦ ⑧ ⑨ ⑩ ⑪

① Type

Return-Line Filter	**RFA**

② Group

Flow	Size
110 l/min / 30 US GPM	**030**

Note: Exact flow will depend on the selected filter element. For technical data please see page 83.

③ Filter Material

Material	Max. Δp*collapse	Micron ratings available	Code
Without filter element	-	-	**0**
Inorg. glass fibre	25 bar / 363 PSI	3, 5, 10, 20	**G**
Stainless fibre	30 bar / 435 PSI		**A**
Filter paper	10 bar / 145 PSI	10, 20	**N**
Stainless mesh	30 bar / 435 PSI	25, 50, 100, 200	B, **S**

Note: *Collapse/burst resistance as per ISO 2941. Other materials on request.

④ Micron Rating

3 µm	**03**
5 µm	**05**
10 µm	**10**
20 µm	**20**
25 µm	**25**
50 µm	**50**
100 µm	**100**
200 µm	**200**

Note: Other micron ratings on request.

⑤ Sealing Material

NBR (Buna®)	**B**
FKM (Viton®)	**V**
EPDM	**E**

Note: Other sealing materials on request

⑥ Connection Style

Connection Style	Thread	Code
SAE-O-ring Thread	1-1/16–12	**U12**
SAE-O-ring Thread	3/4–16	**U08**
BSP	1/2	**G08**
BSP	3/4	**G12**

⑦ Clogging Indicator

Without Clogging Indicator	**0**
Visual Clogging Indicator	**V**
Electrical Clogging Switch 42 V, NO	**G42NO**
Electrical Clogging Switch 42 V, NC	**G42NC**
Electrical Clogging Switch 230 V, two-way contact (only for Code W)	**G230**

⑧ Option Clogging Indicator G42NO, G42NC and G230

Plug connector	**0**
M12 x 1,5	**M12**
AMP plug	**A**
Deutsch plug	**D**
Rubber boot	**S**
90 degree Polyamide cap (only for Code G230)	**W**

⑨ Outlet Style

Connection Style	Thread	Code
	Without thread (Standard outlet)	**0**
SAE-O-Ring Thread	1-1/16–12	**U12**
SAE-O-Ring Thread	3/4–16	**U08**
BSP	1/2	**G08**
BSP	3/4	**G12**

⑩ Additional Features

	Position*		
Without leakage oil connection	-		**none**
Leakage oil connection	1	2	**L1**

Note: *Position of the leakage oil connection see page 78. Without any code: assembly in the middle of the filter cover.

⑪ Design Code

Only for information	**X**

Filter Elements ▪ Type RE

RE - 030 - G - 10 - B / X

① ② ③ ④ ⑤ ⑥

① Type

Filter Element Series	**RE**

② Group

According to filter housing

③ Filter Material

Material	Max. Δp*collapse	Micron ratings available	Code
Inorg. glass fibre	25 bar / 363 PSI	3, 5, 10, 20	**G**
Stainless fibre	30 bar / 435 PSI		**A**
Filter paper	10 bar / 145 PSI	10, 20	**N**
Stainless mesh	30 bar / 435 PSI	25, 50, 100, 200	B, **S**

Note: *Collapse/burst resistance as per ISO 2941. Other materials on request.

④ Micron Rating

3 µm	**03**
5 µm	**05**
10 µm	**10**
20 µm	**20**
25 µm	**25**
50 µm	**50**
100 µm	**100**
200 µm	**200**

Note: Other micron ratings on request.

⑤ Sealing Materials

NBR (Buna®)	**B**
FKM (Viton®)	**V**
EPDM	**E**

Note: Other sealing materials on request.

⑥ Design Code

Only for information	**X**

Return-Line Filters ▪ Type RFA

Electrical Clogging Switch

The switch is used where an electrical signal is needed to indicate when the element needs to be changed. The switch can turn on a light, or shut the machine down, or any further function controlled by an electric signal. The switching pressure is 2,5 bar / 36.25 PSI and this allows the element to be changed before the bypass setting of 3 bar / 43.5 PSI is reached.

Standard type with plug connector and rubber cap. Available with DEUTSCH DT04-2P plug (industrial standard), AMP Junior Timer plug (industrial standard) and five-pin circular connector M12, A-coded, according to IEC 61076-2-101.

Technical Data

	Limit-Switch G42NO+NC	Limit-Switch G230
Switching Capacity	100 VA	1000 VA
Voltage	10…42 VAC/DC	10…250 VAC/DC
Current	10mA…4A	
Switching Accuracy	± 0,5 bar at room temp. and new state	
Switching Frequency	200/min	
max. Pressure Ramp Rate	≤ 1 bar/ms	
Degree of Protection	IP65 (plug type S and W), IP67 (plug type M12, A, D)	
Temperature Range	-30°C … +100°C	-40°C … +100°C

Order Code

Limit-Switch - **G42NO** - **S** - **M10** - **B2.5**

① ② ③ ④ ⑤

① Type

Limit-Switch	

② Connector Type

Electrical Clogging Switch 10 V ... 42 V, NO	**G42NO**
Electrical Clogging Switch 10 V ... 42 V, NC	**G42NC**
Electrical Clogging Switch 10 V ... 250 V, two-way contact (only for Plug Type W)	**G230**

③ Plug Type

M12 Five-Pin Connector according to IEC 61076-2-101	**M12**
AMP-Junior-Timer Plug	**A**
DEUTSCH Plug DT04-2P	**D**
Rubber boot	**S**
90 degree Polyamide cap (only for Connector Type G230)	**W**

④ Thread Type

M10 x 1 con.	**M10**

⑤ Pressure Setting

2,5 bar / 36.3 PSI	**B2.5**

Dimensions Plug Type

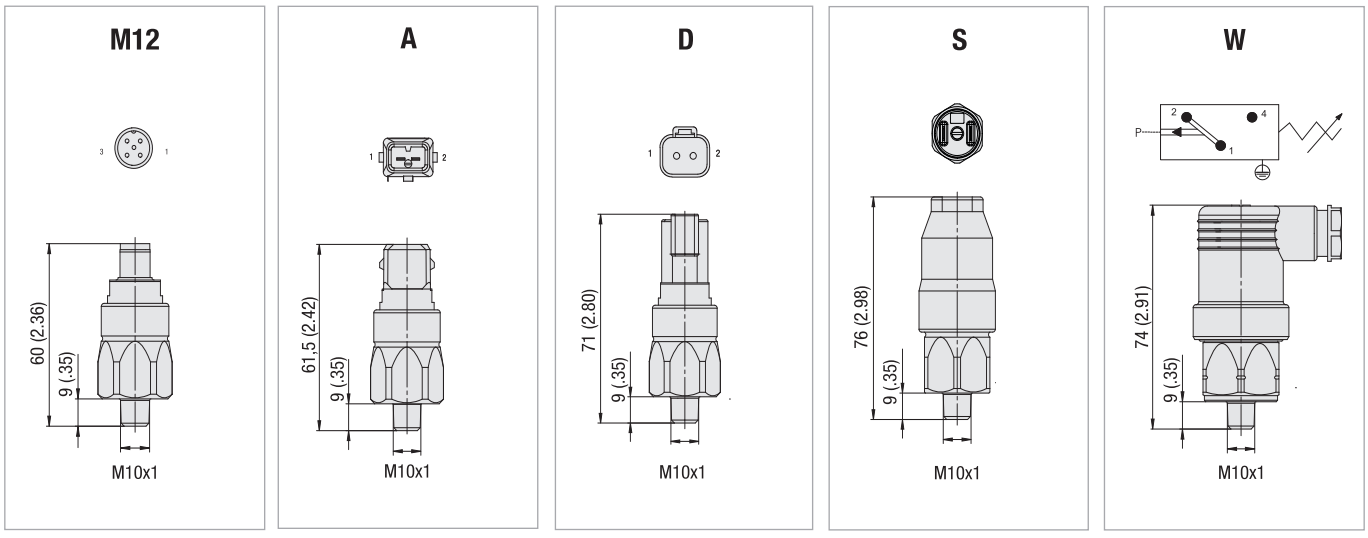

Note: The customer / user carries the responsibility for the electrical connection.

Dimensional drawings: All dimensions in mm/in.

Return-Line Filters ▪ Type RFA

Visual Clogging Indicator

The gauge visually displays the degree of contamination of the element.
The colored segments allow quick visual checking.

green	0 ... 2,5 bar / 0 … 36.25 PSI	Element has service life left
yellow	2,5 ... 3,0 bar / 36.25 ... 43.5 PSI	Element is contaminated and should be changed
red	>3,0 bar / >43.5 PSI	Bypass valve open, unfiltered oil passing to tank

Order Codes

SPG-C-040-00004-02-P-M10-402922

①

① Type

Visual Clogging Indicator	**SPG-C-040-00004-02-P-M10-402922**

Visual Clogging Indicator



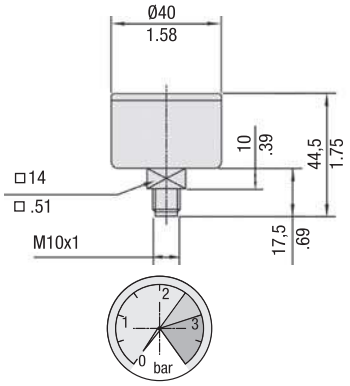

Filter Bowl with Threaded Connection

Under some circumstances such as a tall reservoir or one with oil levels which vary greatly during operation, it is necessary to extend the filter bowl so that the returning oil returns beneath the surface and does not entrain air in the process.
The optional bowl with a female thread allows an extension to be fitted quite simply.
The one piece design also allows for inline applications.

Threaded Outlet

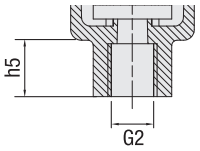

Dimensions see table page 79

Leakage Oil Connection

Seal or case drain lines can be connected to the filter through either of the clogging indicator ports providing that the leakage oil can accept a pressure of 3 bar / 43.5 PSI. It ensures that no unfiltered oil can return to the reservoir.

Leakage Oil Connection

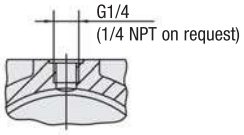

Filter Bowl with Threaded Connection and Diffuser

Diffusers mounted to the filter bowl minimise foaming and reduce noise of high Return-Line flows. For further details on STAUFF Diffusers please refer to the Catalogue No. 10 - Hydraulic Accessories.
Attention: Connection pipe not included in scope of delivery!

Size SRV	for Return-Line Filter Size	Dimensions (mm/in)			
		øD	L	Thread G	Hex
SRV-050-G12	RFA-030	62	109	G3/4	36
SRV-050-N12		2.44	4.29	3/4 NPT	1.42

Threaded Outlet with SRV

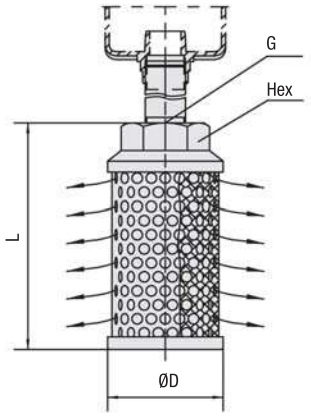

Return-Line Filters ▪ Type RFA Flow Characteristics

The following characteristics are valid for mineral oils with a density of 0,85 kg/dm³ and the kinematic viscosity of 30 mm²/s (30cSt). The characteristics have been determined in accordance to ISO 3968. Multipass filter ratings have been obtained in accordance to ISO 16889. The housing pressure drop is directly proportional to the oil density. Contact STAUFF for details.

Housings RFA-030

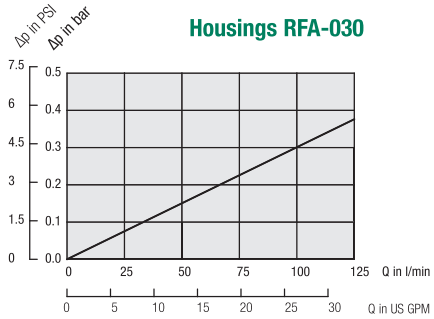

Filter Elements RE-030-A

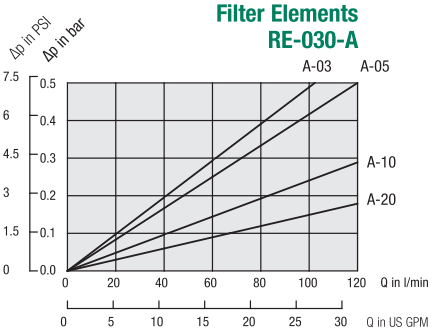

Filter Elements RE-030-G

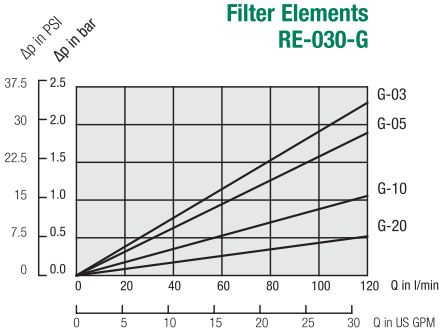

Filter Elements RE-...S

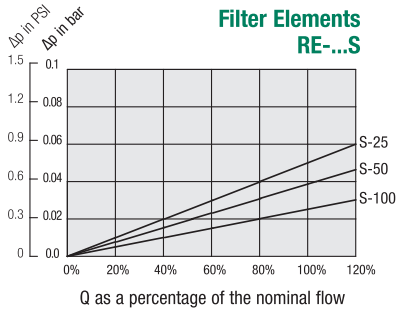

Filter Elements RE-...N

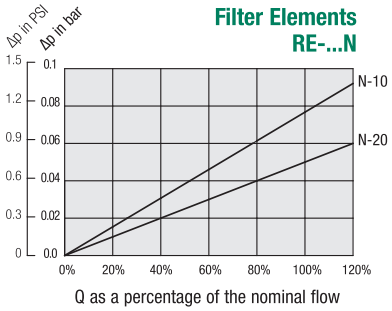

Checklist for the selection of filter housings

Please use the following Checklist as a guideline when preparing an enquiry for the selection of filter housings. Scan or copy the page from the catalogue, print and complete it with as much information as possible, before sending it by email or fax to the closest STAUFF branch office. If possible, please also let us know the quantities required, and if the enquiry is for a one-time or recurring demand. We look forward to hearing from you, and are always available for consultation, when required.

Information on the fluid in use

Type of fluid ☐ Brand ☐ ISO designation

Fluid viscosity ☐ mm²/sec ☐ cSt

Fluid temperature ☐ °C ☐ °F ☐ In cold condition ☐ In warm condition

Information on the filter housing

Position in the hydraulic system ☐ Suction line ☐ Pressure line ☐ Return line

Operating pressure ☐ bar ☐ PSI

Nominal flow ☐ l/min ☐ US GPM

Valve ☐ No, not required

☐ Yes, the following type: ☐ Bypass valve ☐ Non-return valve ☐ Reverse flow valve ☐ Multi-function valve

Clogging indicator ☐ No, not required

☐ Yes, the following type: ☐ Visual ☐ Electrical ☐ Visual-electrical

Connection type and size ☐

Sealing material ☐ NBR (Buna®) ☐ FKM (Viton®) ☐ Other

Information on the filter element

Filter media ☐ Inorganic Glass Fibre ☐ Polyester Fibre ☐ Cellulose Fibre ☐ Stainless Fibre ☐ Stainless Mesh

Micron rating ☐ µm

Cleanliness level ☐ (to ISO 4406)

Information on the application

Information on the ambient conditions

Additional information and requirements

Return-Line Filters ▪ Type RFB



D

Product Description

STAUFF RFB Return-Line Filters are designed as tank top filters. They are mounted directly on the tank top and if 100% of the system oil is filtered they provide the optimum removal of contaminant from the system. This provides the pump with clean oil thus reducing contaminant generated wear. Because of it's low weight and compact design, the STAUFF RFB Filters are ideally suited for mobile hydraulic applications. A high efficiency of contaminant removal is assured by using STAUFF RE Replacement Filter Elements. The high dirt-hold capacity of STAUFF Elements ensures a long service life and as a result reduced maintenance costs.

Technical Data

Construction
- Tank Top flange mounting

Materials
- Filter head: Aluminium
- Filter bowl & cap: Glass Fibre Reinforced Polyamide
- Sealings: NBR (Buna-N®)
  FKM (Viton®)
  EPDM (Ethylene Propylene Diene Monomer Rubber)
  Other sealing materials on request

Port Connections
- BSP
- NPT
- SAE O-ring thread

Operating Pressure
- Max. 10 bar / 145 PSI

Temperature Range
- -20 °C ... +100 °C / -44 °F ... +212 °F
  (Short term up to +110°C / +230 °F)

Filter Elements
- Specifications see page 88

Media Compatibility
- Mineral oils, other fluids on request

Options and Accessories

Valve
- Bypass valve (integrated in the filter element): Opening pressure 3 bar ± 0,3 bar / 43.5 PSI ± 4.35 PSI
  Other settings available on request

Clogging Indicators
- For clogging indicator types please see page 89

Return-Line Filters ▪ Type RFB

D

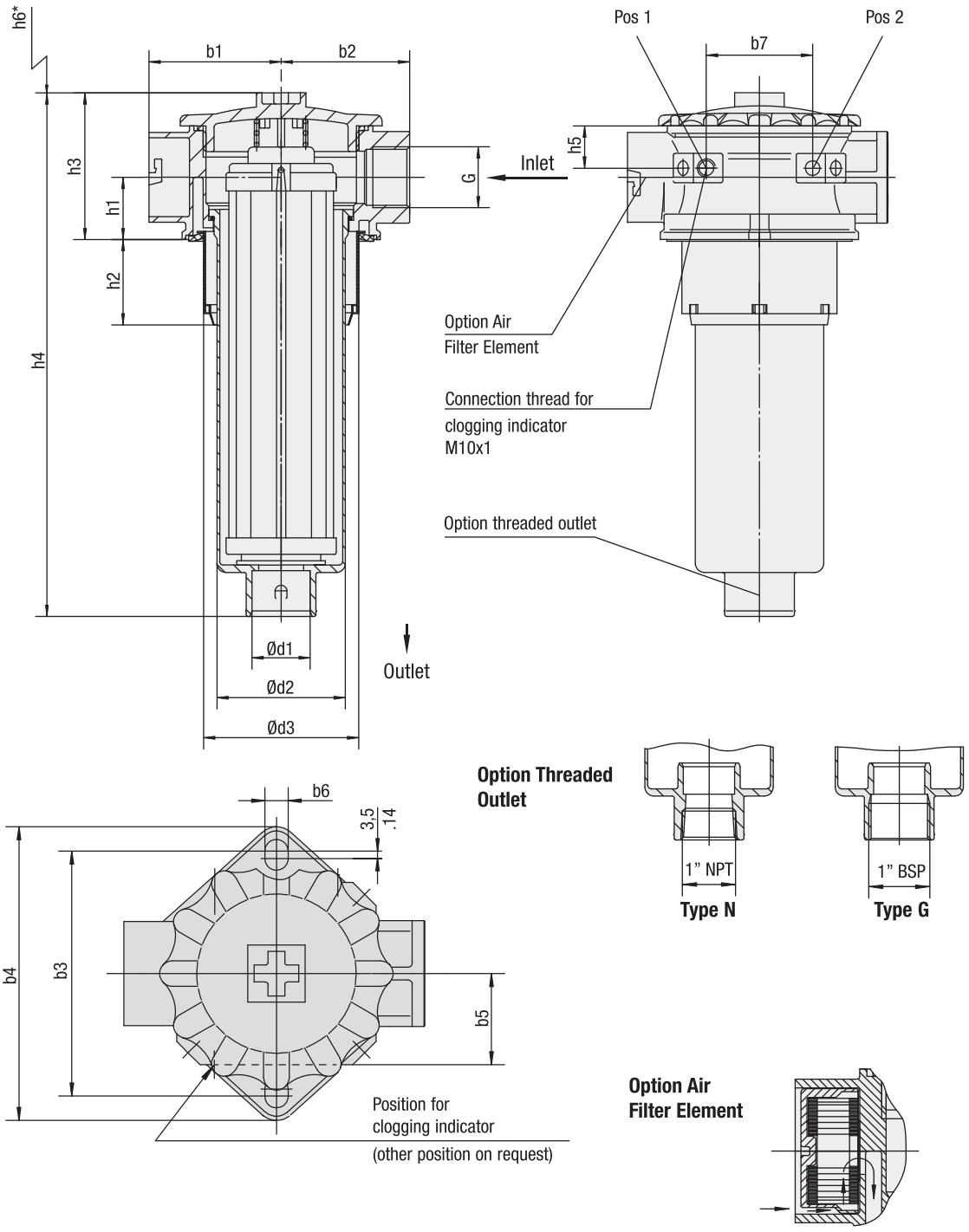

* recommended space for element change

Return-Line Filters ▪ Type RFB

Thread Connection G	Filter Size RFB					
	022		046		052	
BSP	3/4	1	3/4	1	3/4	1
NPT	3/4	1	3/4	1	3/4	1
SAE O-ring Thread	1-5/16–12					

Dimensions (mm/in)	Filter Size RFB		
	022	046	052
h1	34	34	34
	1.34	1.34	1.34
h2	46,5	46,5	46,5
	1.83	1.83	1.83
h3	80	80	80
	3.15	3.15	3.15
h4	205,5	285,5	351,5
	8.09	11.24	13.84
h5	23	23	23
	.91	.91	.91
h6	154	239	305
	6.26	9.41	12.01
d1	32	32	32
	1.26	1.26	1.26
d2	70	70	70
	2.76	2.76	2.76
d3	84,5	84,5	84,5
	3.33	3.33	3.33
b1	72	72	72
	2.84	2.84	2.84
b2	70	70	70
	2.76	2.76	2.76
b3	115,5	115,5	115,5
	4.55	4.55	4.55
b4	138,5	138,5	138,5
	5.45	5.45	5.45
b5	43	43	43
	1.69	1.69	1.69
b6	11	11	11
	.43	.43	.43
b7	58	58	58
	2.28	2.28	2.28

Return-Line Filter Housings / Complete Filters ▪ Type RFB

RFB - 022 - G - 10 - B - G16 - G42NO - D - G - L10 / X
① ② ③ ④ ⑤ ⑥ ⑦ ⑧ ⑨ ⑩ ⑪

① Type

Return-Line Filter	**RFB**

② Group

Flow	Size
75 l/min / 22 US GPM	**022**
165 l/min / 46 US GPM	**046**
185 l/min / 52 US GPM	**052**

Note: Exact flow will depend on the selected filter element. For technical data please see page 91.

③ Filter Material

Material	Max. Δp*collapse	Micron ratings available	Code
Without filter element	-	-	**0**
Inorg. glass fibre	25 bar / 363 PSI	3, 5, 10, 20	**G**
Stainless fibre	30 bar / 435 PSI		**M**
Filter paper	10 bar / 145 PSI	10, 20	**N**
Stainless mesh	30 bar / 435 PSI	10, 25, 50, 100, 200	**S**

Note: *Collapse/burst resistance as per ISO 2941. Other materials on request.

④ Micron Rating

3 µm	**03**
5 µm	**05**
10 µm	**10**
20 µm	**20**
25 µm	**25**
50 µm	**50**
100 µm	**100**
200 µm	**200**

Note: Other micron ratings on request.

⑤ Sealing Material

NBR (Buna®)	**B**
FKM (Viton®)	**V**
EPDM	**E**

Note: Other sealing materials on request.

⑥ Connection Style

Connection Style		Code
BSP	1	**G16**
BSP	3/4	G12
NPT	1	**N16**
NPT	3/4	N12
SAE-O-ring Thread	1-5/16–12	**U16**

Note: Bold types identify preferred connection style.

⑦ Clogging Indicator

Without Clogging Indicator	**0**
Visual Clogging Indicator	**V**
Electrical Clogging Switch 42 V, NO	**G42NO**
Electrical Clogging Switch 42 V, NC	**G42NC**
Electrical Clogging Switch 110 V ... 230 V, two-way contact (only for Code W)	**G230**

⑧ Option Clogging Indicator G42NO, G42NC and G230

Plug connector	**0**
M12 x 1,5	**M12**
AMP plug	**A**
Deutsch plug	**D**
Rubber boot	**S**
90 degree Polyamide cap (only for Code G230)	**W**

⑨ Outlet Style

With 1" BSP thread	**G16**
With 1" NPT thread	**N16**

⑩ Air Filter Element

Without Air Filter Element	**none**
Filter paper 10 micron	**L10**

Note: Other materials and micron ratings on request.

⑪ Design Code

Only for information	**X**

Filter Elements ▪ Type RE

RE - 022 - G - 10 - B / X
① ② ③ ④ ⑤ ⑥

① Type

Filter Element Series	**RE**

② Group

According to filter housing

③ Filter Material

Material	Max. Δp*collapse	Micron ratings available	Code
Inorg. glass fibre	25 bar / 363 PSI	3, 5, 10, 20	**G**
Stainless fibre	30 bar / 435 PSI		**M**
Filter paper	10 bar / 145 PSI	10, 20	**N**
Stainless mesh	30 bar / 435 PSI	25, 50, 100, 200	**S**

Note: *Collapse/burst resistance as per ISO 2941. Other materials on request.

④ Micron Rating

3 µm	**03**
5 µm	**05**
10 µm	**10**
20 µm	**20**
25 µm	**25**
50 µm	**50**
100 µm	**100**
200 µm	**200**

Note: Other micron ratings on request.

⑤ Sealing Material

NBR (Buna®)	**B**
FKM (Viton®)	**V**
EPDM	**E**

Note: Other sealing material on request.

⑥ Design Code

Only for information	**X**

Air Filter Element

KIT-RFB-AIR - L - 10 / X
① ② ③ ④

① Type

Air filter for RFB-022/046/052	**KIT-RFB-AIR**

② Filter Material

Filter Paper	**L**

Note: Other materials on request.

③ Micron Rating

10µm	**10**

Note: Other micron ratings on request.

④ Design Code

Only for information	**X**

Return-Line Filters ▪ Type RFB

Electrical Clogging Switch

The switch is used where an electrical signal is needed to indicate when the element needs to be changed. The switch can turn on a light, or shut the machine down, or any further function controlled by an electric signal. The switching pressure is 2,5 bar / 36.25 PSI and this allows the element to be changed before the bypass setting of 3 bar / 43.5 PSI is reached.

Standard type with plug connector and rubber cap. Available with DEUTSCH DT04-2P plug (industrial standard), AMP Junior Timer plug (industrial standard) and five-pin circular connector M12, A-coded, according to IEC 61076-2-101.

Technical Data

	Limit-Switch G42NO+NC	Limit-Switch G230
Switching Capacity	100 VA	1000 VA
Voltage	10…42 VAC/DC	10…250 VAC/DC
Current	10mA…4A	
Switching Accuracy	± 0,5 bar at room temp. and new state	
Switching Frequency	200/min	
max. Pressure Ramp Rate	≤ 1 bar/ms	
Degree of Protection	IP65 (plug type S and W), IP67 (plug type M12, A, D)	
Temperature Range	-30°C … +100°C	-40°C … +100°C

Order Code

Limit-Switch	-	G42NO	-	S	-	M10	-	B2.5
①		②		③		④		⑤

① Type

Limit-Switch	

② Connector Type

Electrical Clogging Switch 10 V ... 42 V, NO	**G42NO**
Electrical Clogging Switch 10 V ... 42 V, NC	**G42NC**
Electrical Clogging Switch 10 V ... 250 V, two-way contact (only for Plug Type W)	**G230**

③ Plug Type

M12 Five-Pin Connector according to IEC 61076-2-101	**M12**
AMP-Junior-Timer Plug	**A**
DEUTSCH Plug DT04-2P	**D**
Rubber boot	**S**
90 degree Polyamide cap (only for Connector Type G230)	**W**

④ Thread Type

M10 x 1 con.	**M10**

⑤ Pressure Setting

2,5 bar / 36.3 PSI	**B2.5**

Dimensions Plug Type

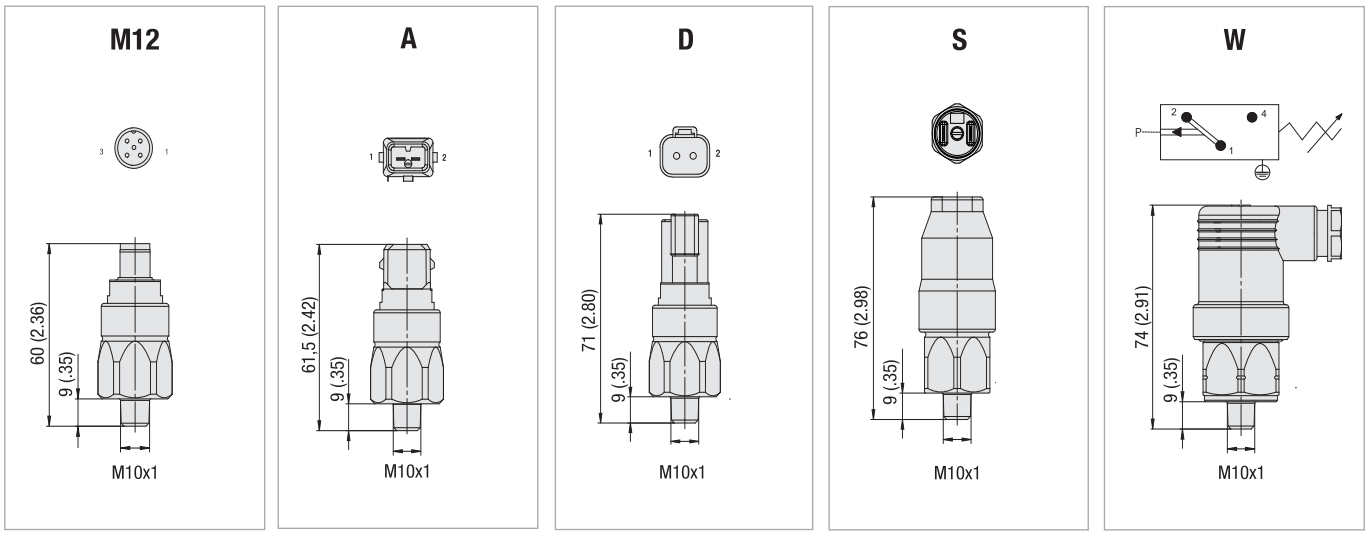

Note: The customer / user carries the responsibility for the electrical connection.

Dimensional drawings: All dimensions in mm/in.

Return-Line Filters ▪ Type RFB

Visual Clogging Indicator

The gauge visually displays the degree of contamination of the element.
The colored segments allow quick visual checking.

green	0 ... 2,5 bar / 0 … 36.25 PSI	Element has service life left
yellow	2,5 ... 3,0 bar / 36.25 ... 43.5 PSI	Element is contaminated and should be changed
red	>3,0 bar / >43.5 PSI	Bypass valve open, unfiltered oil passing to tank

Order Codes

SPG-C-040-00004-02-P-M10-402922

①

① Type

Visual Clogging Indicator	**SPG-C-040-00004-02-P-M10-402922**

Visual Clogging Indicator



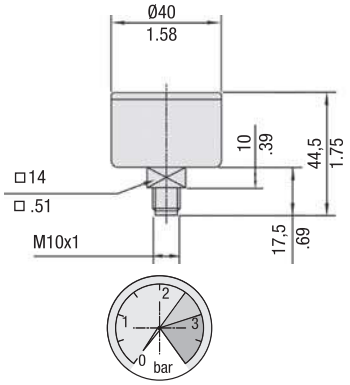

Filter Bowl with Threaded Connection

Under some circumstances such as a tall reservoir or one with oil levels which vary greatly during operation, it is necessary to extend the filter bowl so that the returning oil returns beneath the surface and does not entrain air in the process.
The bowl with a female thread allows an extension to be fitted quite simply.

Threaded Outlet

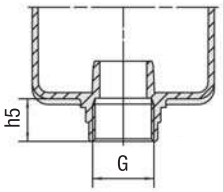

Dimensions see table page 87

Air Filter Element

Allows an effective filtration of the incoming air which avoids the infiltration of dirt particles into the hydraulic system.
The standard air filter element is a 10 micron cellulose; other materials and micron ratings on request.

Air Filter

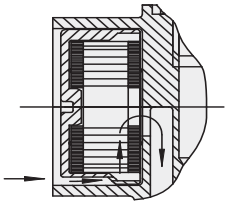

Order Code

REA-046-L-10-B

①

① Type

Air Filter Element	**REA-046-L-10-B**

Filter Bowl with Threaded Connection and Diffuser

Diffusers mounted to the filter bowl minimise foaming and reduce noise of high Return-Line flows. For further details on STAUFF Diffusers please refer to the Catalogue No. 10 - Hydraulic Accessories.
Attention: Connection pipe not included in scope of delivery!

Size SRV	for Return-Line Filter Size	Dimensions (mm/in)			
		øD	L	Thread G	Hex
SRV-114-G16	RFB-022/046/052	60	139	G1	46
SRV-114-N16		2.36	5.47	1 NPT	1.81

Threaded Outlet with SRV

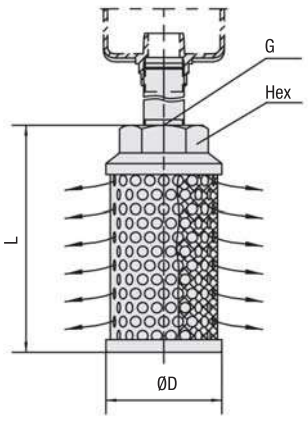

Return-Line Filters ▪ Type RFB Flow Characteristics

The following characteristics are valid for mineral oils with a density of 0,85 kg/dm³ and the kinematic viscosity of 30 mm²/s (30cSt). The characteristics have been determined in accordance to ISO 3968. Multipass filter ratings have been obtained in accordance to ISO 16889. The housing pressure drop is directly proportional to the oil density. Contact STAUFF for details.

Housings RFB-022/046/052

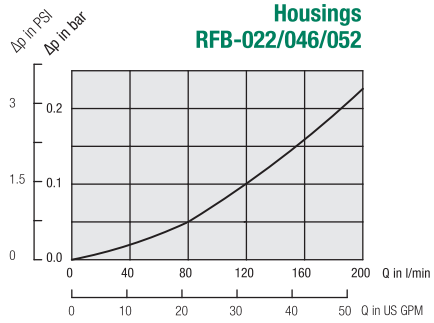

Filter Elements RE-022-G

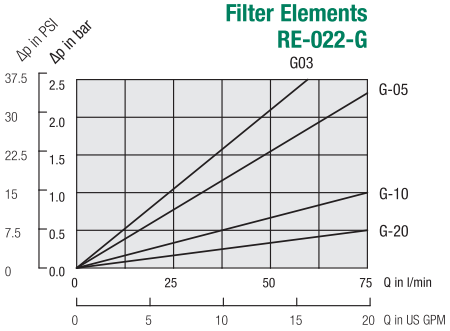

Filter Elements RE-046-G

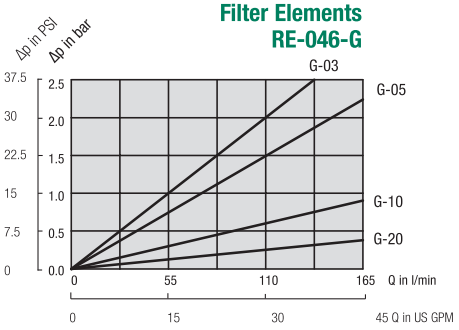

Filter Elements RE-052-G

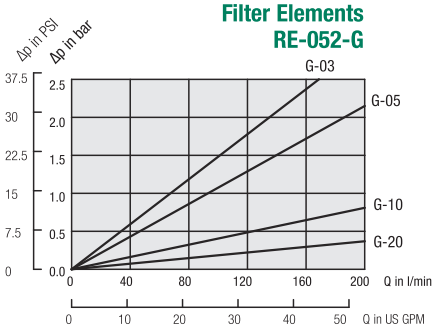

Filter Elements RE-022-S

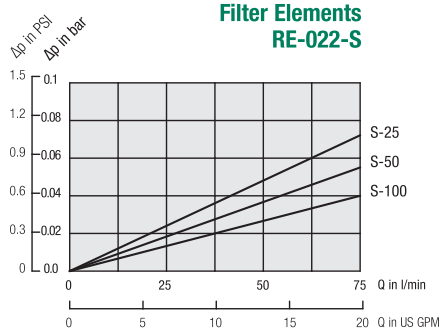

Filter Elements RE-046-S

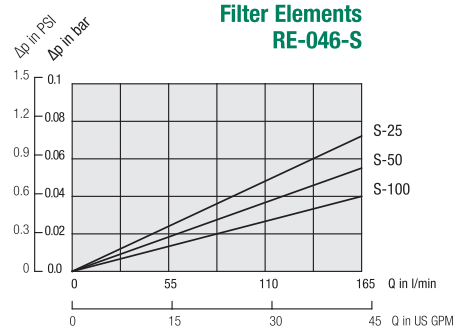

Filter Elements RE-052-S

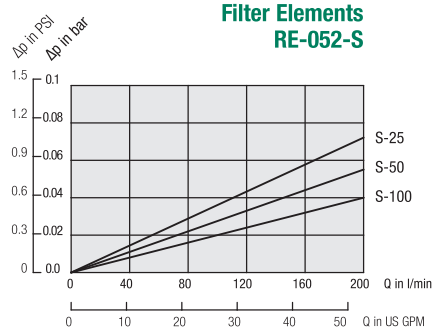

Filter Elements RE-022-N

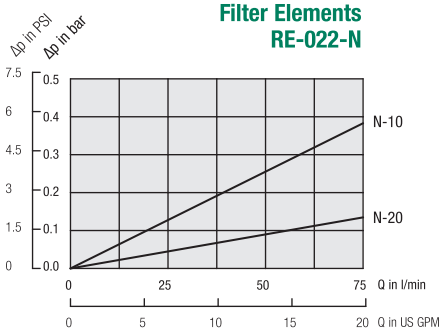

Filter Elements RE-046-N

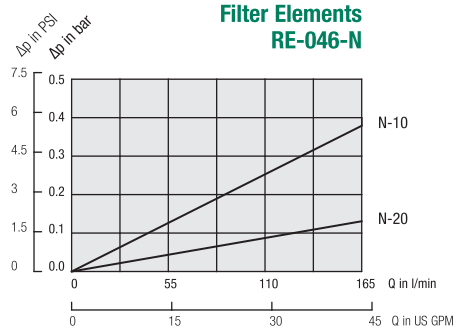

Filter Elements RE-052-N

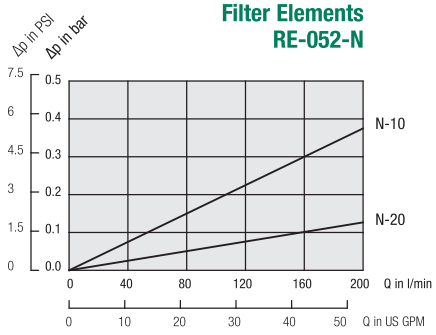

Checklist for the selection of filter housings

Please use the following Checklist as a guideline when preparing an enquiry for the selection of filter housings. Scan or copy the page from the catalogue, print and complete it with as much information as possible, before sending it by email or fax to the closest STAUFF branch office. If possible, please also let us know the quantities required, and if the enquiry is for a one-time or recurring demand. We look forward to hearing from you, and are always available for consultation, when required.

D

Information on the fluid in use

Type of fluid ☐ Brand ☐ ISO designation

Fluid viscosity ☐ mm²/sec ☐ cSt

Fluid temperature ☐ °C ☐ °F ☐ In cold condition ☐ In warm condition

Information on the filter housing

Position in the hydraulic system ☐ Suction line ☐ Pressure line ☐ Return line

Operating pressure ☐ bar ☐ PSI

Nominal flow ☐ l/min ☐ US GPM

Valve ☐ No, not required

☐ Yes, the following type: ☐ Bypass valve ☐ Non-return valve ☐ Reverse flow valve ☐ Multi-function valve

Clogging indicator ☐ No, not required

☐ Yes, the following type: ☐ Visual ☐ Electrical ☐ Visual-electrical

Connection type and size ☐

Sealing material ☐ NBR (Buna®) ☐ FKM (Viton®) ☐ Other

Information on the filter element

Filter media ☐ Inorganic Glass Fibre ☐ Polyester Fibre ☐ Cellulose Fibre ☐ Stainless Fibre ☐ Stainless Mesh

Micron rating ☐ µm

Cleanliness level ☐ (to ISO 4406)

Information on the application

Information on the ambient conditions

Additional information and requirements

Return-Line Filters ▪ Type RFS / RFS-D





D

Product Description

STAUFF RFS and RFS-D Carbon Steel Return-Line Filters are designed as tank top or in-line filters. They are mounted directly on the tank top and if 100% of the system oil is filtered, they provide the optimum removal of contaminants from the system. This provides the pump with clean oil thus reducing contaminant generated wear. The filter bowl is designed with a connection, threaded or flanged, for extending the return oil beneath the surface thus preventing the entrainment of air. A high efficiency of contaminant removal is assured by using STAUFF RE Replacement Filter Elements. The high dirt-hold capacity of STAUFF Elements ensures a long service life and as a result reduced maintenance costs.

Technical Data

Construction
- Tank Top mounting or in-line mounting

Materials
- Filter Housing: Carbon Steel
- Sealings: NBR (Buna-N®)
  FKM (Viton®)
  EPDM (Ethylene Propylene Diene Monomer Rubber)
  Other sealing materials on request

Port Connections
- BSP
- SAE flange 3000 PSI

Flow Rating
- Up to 1135 l/min / 300 US GPM

Operating Pressure
- Max. 25 bar / 365 PSI

Proof Pressure
- Min. 37,5 bar / 545 PSI

Temperature Range
- -20 °C ... +100 °C / -44 °F ... +212 °F
  (Short term up to +110°C / +230 °F)

Filter Elements
- Specifications see page 98

Media Compatibility
- Mineral oils, other fluids on request

Options and Accessories

Valve
- Bypass valve (integrated in the filter element): Opening pressure 3 bar ± 0,3 bar / 43.5 PSI ± 4.35 PSI
  Other settings available on request

Clogging Indicators
- For clogging indicator types please see page 99

Return-Line Filters ▪ Type RFS

D

RFS-045/070

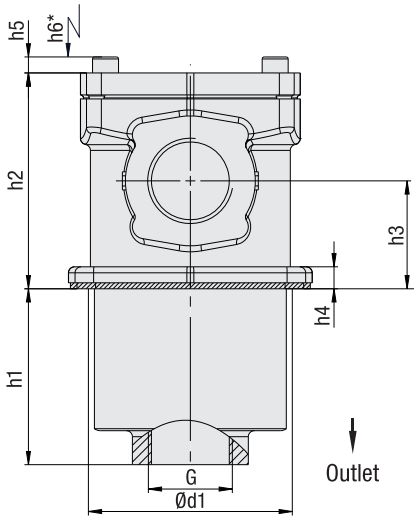

RFS-090/160

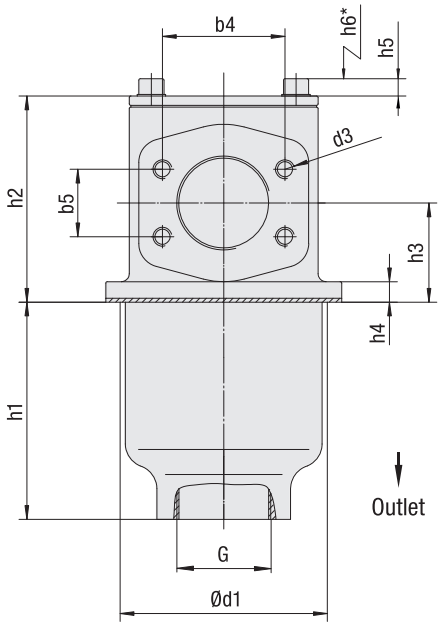

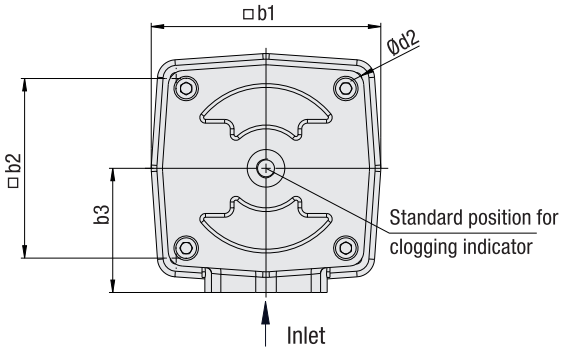

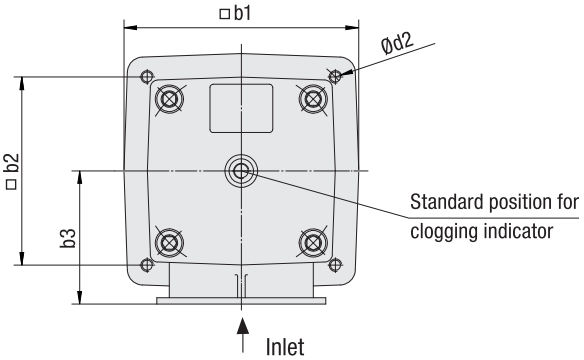

RFS-250/300

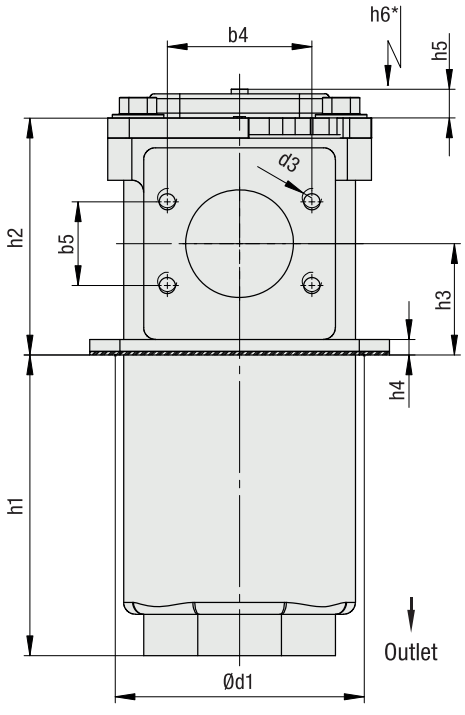

Top View

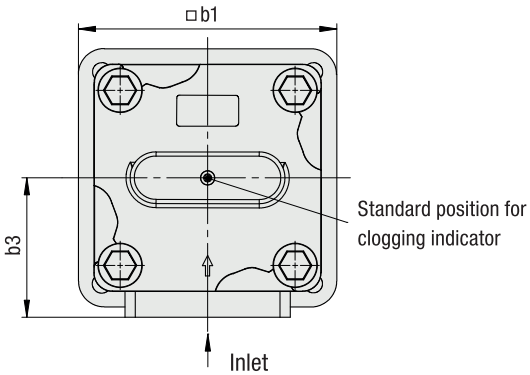

Bottom View

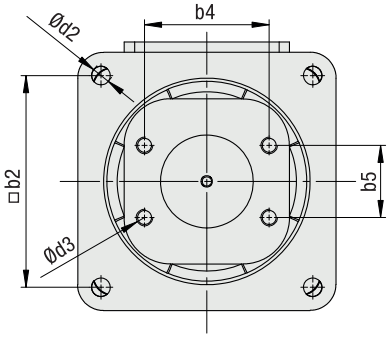

* recommended space for element change

RFS-D-090/160

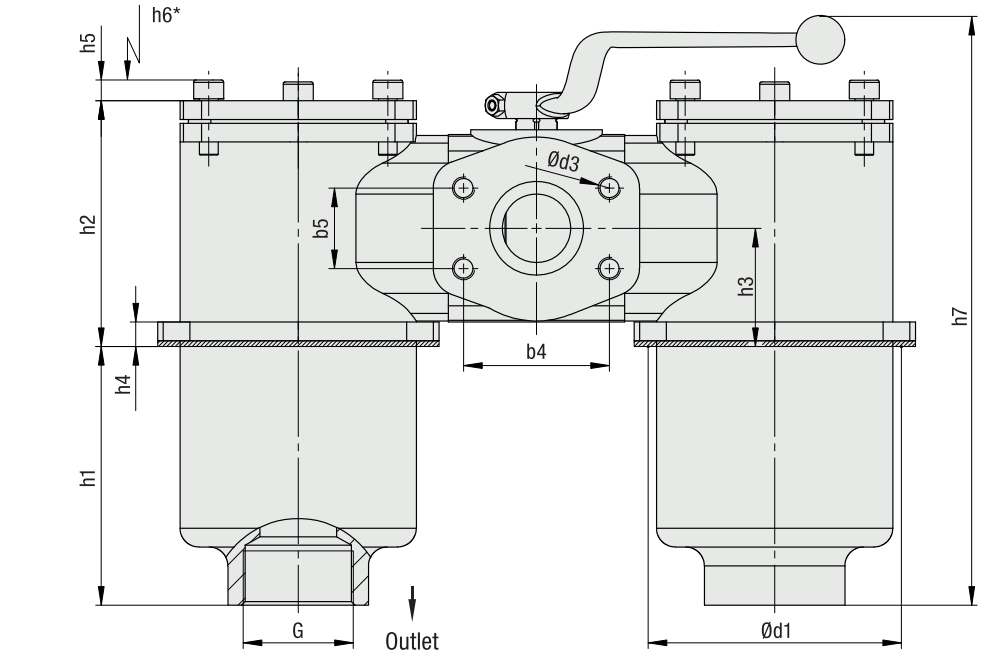

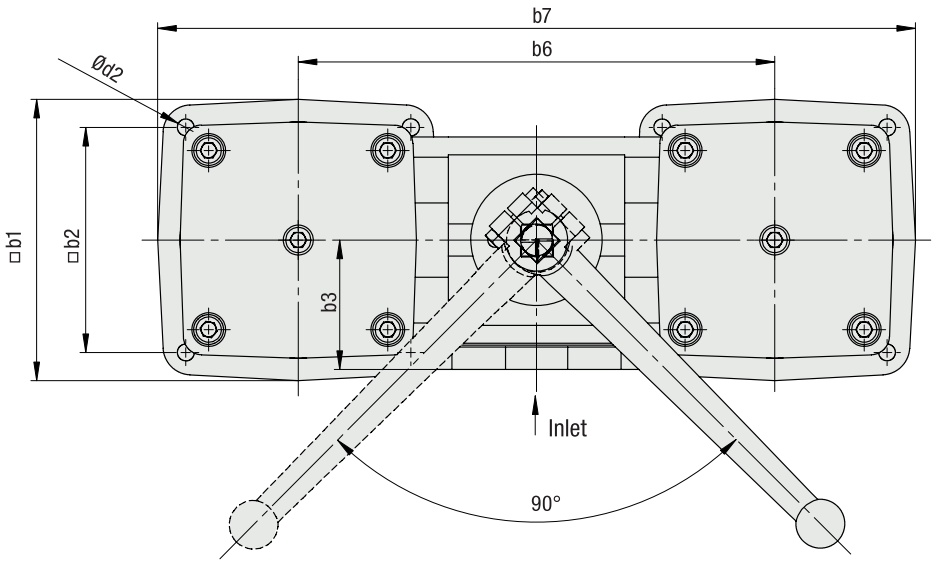

* recommended space for element change

Return-Line Filters ▪ Type RFS-D

D

RFS-D-250/300

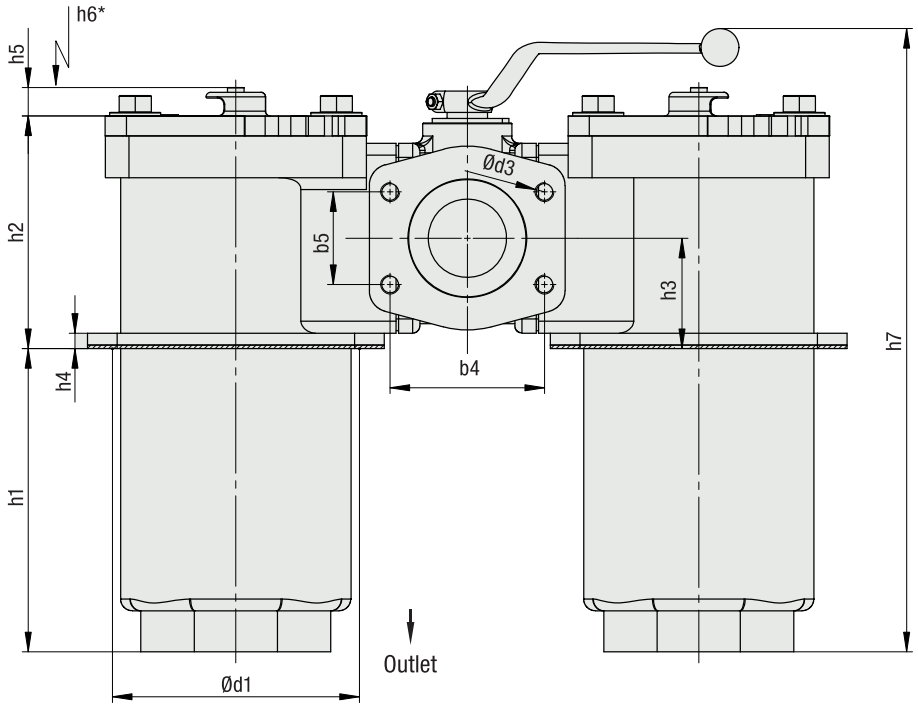

Top View

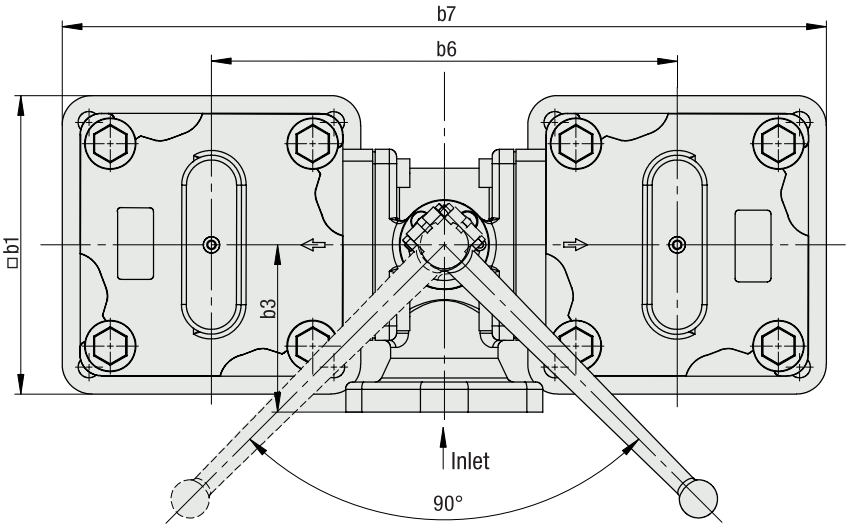

Bottom View

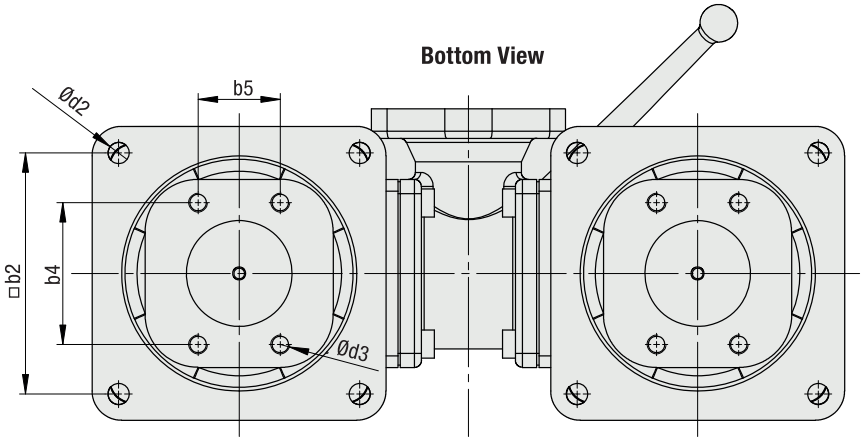

* recommended space for element change

Return-Line Filters ▪ Type RFS / RFS-D

Thread Connection		Filter Size									
		RFS-045	RFS-070	RFS-090	RFS-D-090	RFS-160	RFS-D-160	RFS-250	RFS-D-250	RFS-300	RFS-D-300
Inlet	BSP	1-1/4	1-1/4	2	2	-	-	-	-	-	-
	SAE Flange	-	-	2	2	3	3	3-1/2	4	4	4
Outlet G	BSP	1-1/4	1-1/4	2	2	3	3	-	-	-	-
	SAE Flange	-	-	-	-	-	-	3-1/2	3-1/2	4	4

Dimensions (mm/in)	Filter Size									
	RFS-045	RFS-070	RFS-090	RFS-D-090	RFS-160	RFS-D-160	RFS-250	RFS-D-250	RFS-300	RFS-D-300
b1	122	122	150	150	196	196	255	255	255	255
	4.80	4.80	5.91	5.91	7.72	7.72	10.04	10.04	10.04	10.04
b2	95,5	95,5	120	120	155,5	155,5	205	205	205	205
	3.76	3.76	4.72	4.72	6.12	6.12	8.07	8.07	8.07	8.07
b3	66	66	85	69	110	100	135	140	145	140
	2.60	2.60	3.35	2.72	4.33	3.94	5.32	5.51	5.71	5.51
b4	-	-	77,8	77,8	106,4	106,4	120,7	130,2	130,2	130,2
			3.06	3.06	4.19	4.19	4.75	5.13	5.13	5.13
b5	-	-	42,9	42,9	61,9	61,9	69,5	77,8	77,8	77,8
			1.69	1.69	2.44	2.44	2.74	3.06	3.06	3.06
b6	-	-	-	254	-	330	-	390	-	410
				10		12.99		15.15		16.14
b7	-	-	-	404	-	525	-	640	-	660
				15.91		20.67		25.20		25.98
b8	-	-	-	-	-	-	-	120,7	-	130,2
								4.75		5.13
b9	-	-	-	-	-	-	-	69,5	-	77,8
								2.74		3.06
d1	102	102	135	135	180	180	208	208	208	208
	4.01	4.01	5.32	5.32	7.09	7.09	8.19	8.19	8.19	8.19
d2	6,4	6,4	9	9	13,5	13,5	17,5	17,5	17,5	17,5
	.25	.25	.35	.35	.53	.53	.69	.69	.69	.69
d3	-	-	M12	M12	M16	M16	M16	M16	M16	M16
			1/2-UNC	1/2-UNC	5/8-UNC	5/8-UNC	5/8 UNC	5/8 UNC	5/8 UNC	5/8 UNC
h1	88	147	138	138	243	243	251	251	332	332
	3.46	5.79	5.43	5.43	9.57	9.57	9.88	9.88	13.07	13.07
h2	108	108	131	131	167	167	198	198	241	241
	4.25	4.25	5.16	5.16	6.57	6.57	7.80	7.80	9.49	9.49
h3	54	54	63	63	84	84	93	93	121	121
	2.12	2.12	2.48	2.48	3.31	3.31	3.66	3.66	4.76	4.76
h4	11	11	13	13	13	13	13	13	13	13
	.43	.43	.51	.51	.51	.51	.51	.51	.51	.51
h5	8	8	12	12	12	12	24	24	24	24
	.31	.31	.47	.47	.47	.47	.95	.95	.95	.95
h6	130	130	180	180	320	320	350	350	460	460
	5.11	5.11	7.09	7.09	12.60	12.60	13.78	13.78	18.11	18.11
h7	-	-	-	314	-	450	-	525	-	630
				12.36		17.72		20.67		24.80

Return-Line Filter Housings / Complete Filters ▪ Type RFS / RFS-D

RFS - 045 - G - 10 - B - G20 - G42NO - D - G20 / X

① ② ③ ④ ⑤ ⑥ ⑦ ⑧ ⑨ ⑩

① Type

Single Carbon Steel Return-Line Filter	**RFS**
Double Carbon Steel Return-Line Filter	**RFS-D**

② Group

Flow	Size
170 l/min / 45 US GPM (not for RFS-D)	**045**
240 l/min / 70 US GPM (not for RFS-D)	**070**
340 l/min / 90 US GPM	**090**
600 l/min / 160 US GPM	**160**
945 l/min / 250 US GPM	**250**
1135 l/min / 300 US GPM	**300**

Note: Exact flow will depend on the selected filter element. For technical data please see pages 101 / 102.

③ Filter Material

Material	Max. Δp*collapse	Micron ratings available	Code
Without filter element	-	-	**0**
Inorg. glass fibre	25 bar / 363 PSI	3, 5, 10, 20	**G**
Stainless fibre	30 bar / 435 PSI		**A**
Filter paper	10 bar / 145 PSI	10, 20	**N**
Stainless mesh	30 bar / 435 PSI	25, 50, 100, 200	**S**

Note: *Collapse/burst resistance as per ISO 2941. Other materials on request.

④ Micron Rating

3 µm	**03**
5 µm	**05**
10 µm	**10**
20 µm	**20**
25 µm	**25**
50 µm	**50**
100 µm	**100**
200 µm	**200**

Note: Other micron ratings on request.

⑤ Sealing Material

NBR (Buna®)	**B**
FKM (Viton®)	**V**
EPDM	**E**

Note: Other sealing materials on request.

⑥ Connection Style

Connection Style	Thread Style	Group 045 / 070	Code	Group 090	Code	Group 160	Code	Group 250	Code	Group 250* / 300	Code
BSP	-	1-1/4	**G20**	2	**G32**	-	**-**	-	**-**	-	**-**
SAE Flange 3000 PSI	metric	-	**-**	2	**C332M**	3	**C348M**	3-1/2	**C356M**	4	**C364M**
SAE Flange 3000 PSI	UNC	-	**-**	2	**C332U**	3	**C348U**	3-1/2	**C356U**	4	**C364U**

* Note: Only for RFS-D-250.

⑦ Clogging Indicator

Without Clogging Indicator	**0**
Visual Clogging Indicator	**V**
Electrical Clogging Switch 42 V, NO	**G42NO**
Electrical Clogging Switch 42 V, NC	**G42NC**
Electrical Clogging Switch 110 V ... 230 V, two-way contact (only for Code W)	**G230**

⑧ Option Clogging Indicator G42NO, G42NC and G230

Plug connector	**0**
M12 x 1,5	**M12**
AMP plug	**A**
Deutsch plug	**D**
Rubber boot	**S**
90 degree Polyamide cap (only for Code G230)	**W**

⑨ Outlet Style

Connection Style	Thread Style	Group 045 / 070	Code	Group 090	Code	Group 160	Code	Group 250	Code	Group 300	Code
BSP	-	1-1/4	**G20**	2	**G32**	3	**G48**	-	**-**	-	**-**
SAE Flange 3000 PSI	metric	-	**-**	-	**-**	-	**-**	3-1/2	**C356M**	4	**C364M**
SAE Flange 3000 PSI	UNC	-	**-**	-	**-**	-	**-**	3-1/2	**C356U**	4	**C364U**

⑩ Design Code

Only for information	**X**

Filter Elements ▪ Type RE

RE - 045 - G - 10 - B / X

① ② ③ ④ ⑤ ⑥

① Type

Filter Element Series	**RE**

② Group

According to filter housing

③ Filter Material

Material	Max. Δp*collapse	Micron ratings available	Code
Inorg. glass fibre	25 bar / 363 PSI	3, 5, 10, 20	**G**
Stainless fibre	30 bar / 435 PSI		**A**
Filter paper	10 bar / 145 PSI	10, 20	**N**
Stainless mesh	30 bar / 435 PSI	25, 50, 100, 200	**S**

Note: *Collapse/burst resistance as per ISO 2941. Other materials on request.

④ Micron Rating

3 µm	**03**
5 µm	**05**
10 µm	**10**
20 µm	**20**
25 µm	**25**
50 µm	**50**
100 µm	**100**
200 µm	**200**

Note: Other micron ratings on request.

⑤ Sealing Material

NBR (Buna®)	**B**
FKM (Viton®)	**V**
EPDM	**E**

Note: Other sealing materials on request.

⑥ Design Code

Only for information	**X**

Return-Line Filters ▪ Type RFS / RFS-D

Electrical Clogging Switch

The switch is used where an electrical signal is needed to indicate when the element needs to be changed. The switch can turn on a light, or shut the machine down, or any further function controlled by an electric signal. The switching pressure is 2,5 bar / 36.25 PSI and this allows the element to be changed before the bypass setting of 3 bar / 43.5 PSI is reached.

Standard type with plug connector and rubber cap. Available with DEUTSCH DT04-2P plug (industrial standard), AMP Junior Timer plug (industrial standard) and five-pin circular connector M12, A-coded, according to IEC 61076-2-101.

Technical Data

	Limit-Switch G42NO+NC	Limit-Switch G230
Switching Capacity	100 VA	1000 VA
Voltage	10…42 VAC/DC	10…250 VAC/DC
Current	10mA…4A	
Switching Accuracy	± 0,5 bar at room temp. and new state	
Switching Frequency	200/min	
max. Pressure Ramp Rate	≤ 1 bar/ms	
Degree of Protection	IP65 (plug type S and W), IP67 (plug type M12, A, D)	
Temperature Range	-30°C … +100°C	-40°C … +100°C

Order Code

Limit-Switch - **G42NO** - **S** - **M10** - **B2.5**

① ② ③ ④ ⑤

① Type

Limit-Switch	

② Connector Type

Electrical Clogging Switch 10 V ... 42 V, NO	**G42NO**
Electrical Clogging Switch 10 V ... 42 V, NC	**G42NC**
Electrical Clogging Switch 10 V ... 250 V, two-way contact (only for Plug Type W)	**G230**

③ Plug Type

M12 Five-Pin Connector according to IEC 61076-2-101	**M12**
AMP-Junior-Timer Plug	**A**
DEUTSCH Plug DT04-2P	**D**
Rubber boot	**S**
90 degree Polyamide cap (only for Connector Type G230)	**W**

④ Thread Type

M10 x 1 con.	**M10**

⑤ Pressure Setting

2,5 bar / 36.3 PSI	**B2.5**

Dimensions Plug Type

M12

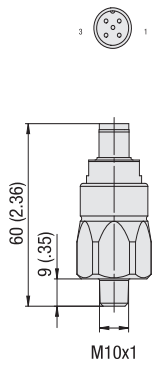

A

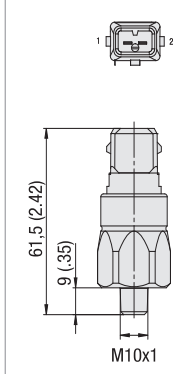

D

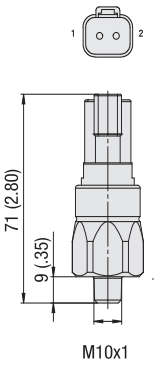

S

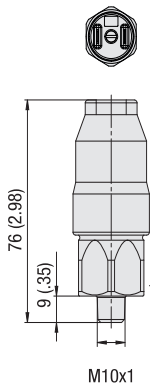

W

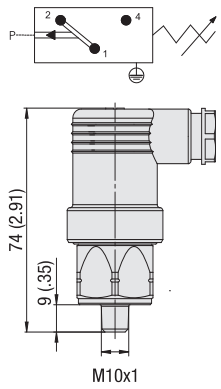

Note: The customer / user carries the responsibility for the electrical connection.

Dimensional drawings: All dimensions in mm/in.

Return-Line Filters ▪ Type RFS / RFS-D

Visual Clogging Indicator

The gauge visually displays the degree of contamination of the element.
The colored segments allow quick visual checking.

green	0 ... 2,5 bar / 0 … 36.25 PSI	Element has service life left
yellow	2,5 ... 3,0 bar / 36.25 ... 43.5 PSI	Element is contaminated and should be changed
red	>3,0 bar / >43.5 PSI	Bypass valve open, unfiltered oil passing to tank

Visual Clogging Indicator



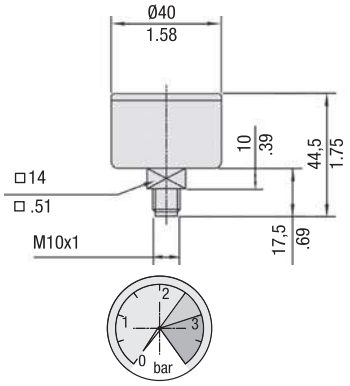

Order Codes

SPG-C-040-00004-02-P-M10-402922

①

① Type

Visual Clogging Indicator	**SPG-C-040-00004-02-P-M10-402922**

Leakage Oil Connection

Seal or case drain lines can be connected to the filter through either of the clogging indicator ports providing that the leakage oil can accept a pressure of 3 bar / 43.5 PSI. It ensures that no unfiltered oil can return to the reservoir.

Leakage Oil Connection

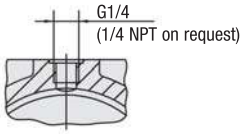

Filter Bowl with Threaded Connection and Diffuser

Diffusers mounted to the filter bowl minimise foaming and reduce noise of high Return-Line flows. For further details on STAUFF Diffusers please refer to the Catalogue No. 10 - Hydraulic Accessories.
Attention: Connection pipe not included in scope of delivery!

Size SRV	for Return-Line Filter Size	Dimensions (mm/in)			
		øD	L	Thread G	Hex
SRV-227-G24	RFS-250	84	200	G1-1/2	60
SRV-227-N24		3.31	7.87	1-1/2 NPT	2.36
SRV-454-G32	RFS-250	84	260	G2	70
SRV-454-N32		3.31	10.24	2 NPT	2.76
SRV-950-G24	RFS-250	148	272	G3	100
SRV-950-N24		5.83	10.71	3 NPT	3.94

Threaded Outlet with SRV

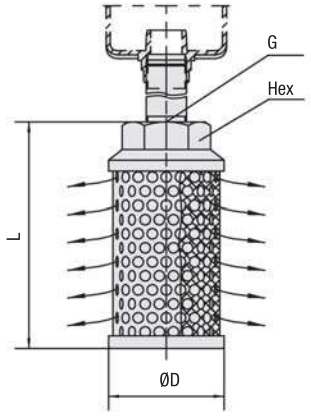

Return-Line Filters ▪ Type RFS Flow Characteristics

The following characteristics are valid for mineral oils with a density of 0,85 kg/dm³ and the kinematic viscosity of 30 mm²/s (30cSt). The characteristics have been determined in accordance to ISO 3968. Multipass filter ratings have been obtained in accordance to ISO 16889. The housing pressure drop is directly proportional to the oil density. Contact STAUFF for details.

Housings RFS-045/070

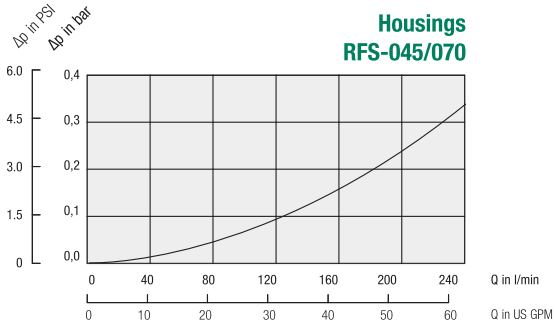

Housings RFS-090/160

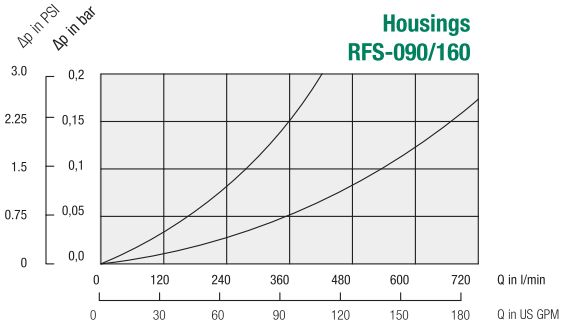

Housings RFS-250/300

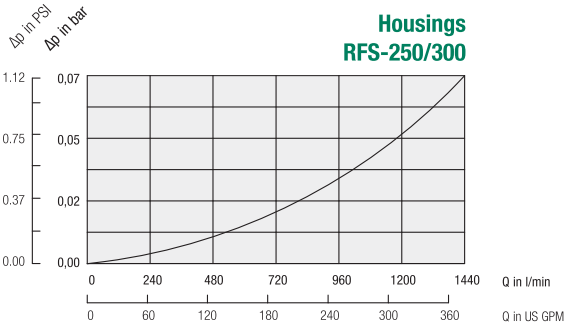

Filter Elements RE-045-A

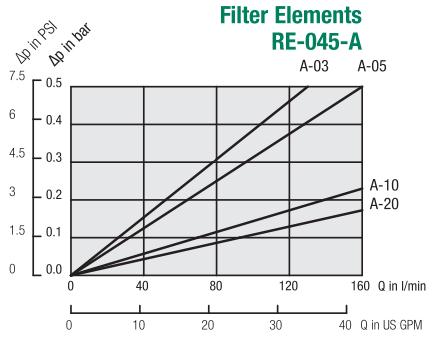

Filter Elements RE-045-G

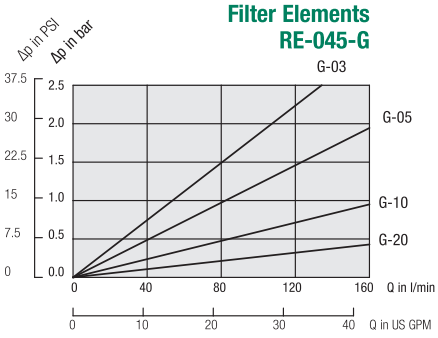

Filter Elements RE-090-A

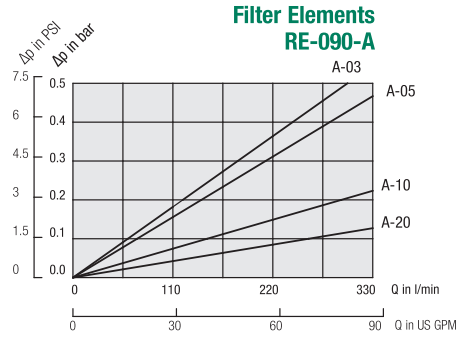

Filter Elements RE-090-G

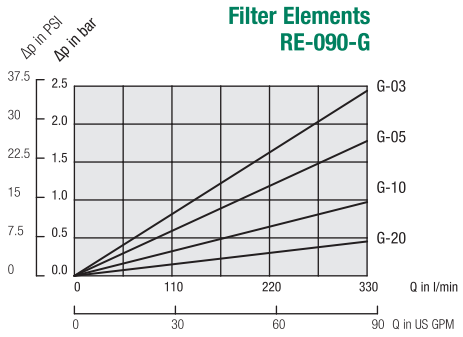

Filter Elements RE-160-A

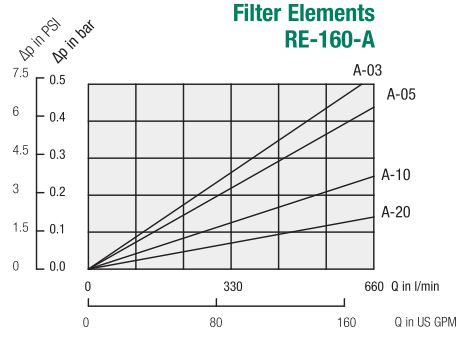

Filter Elements RE-160-G

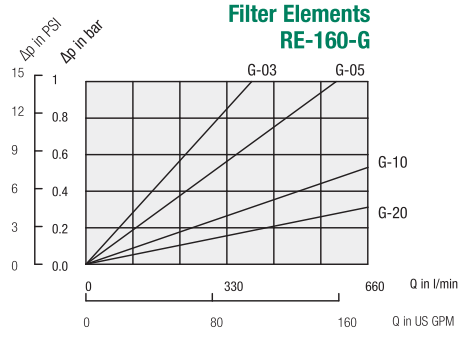

Return-Line Filters ▪ Type RFS Flow Characteristics

The following characteristics are valid for mineral oils with a density of 0,85 kg/dm³ and the kinematic viscosity of 30 mm²/s (30cSt). The characteristics have been determined in accordance to ISO 3968. Multipass filter ratings have been obtained in accordance to ISO 16889. The housing pressure drop is directly proportional to the oil density. Contact STAUFF for details.

Filter Elements RE-250-A

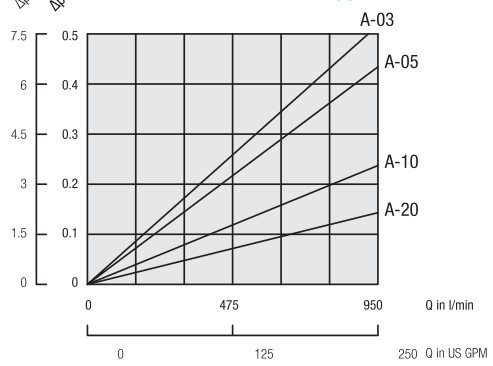

Filter Elements RE-250-G

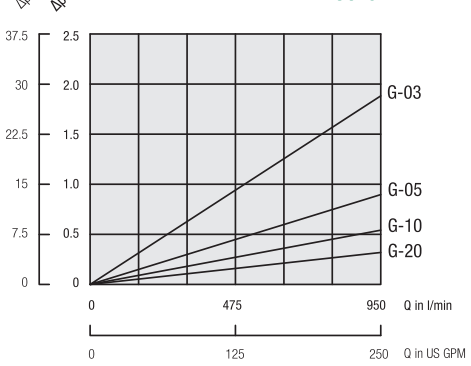

Filter Elements RE-300-A

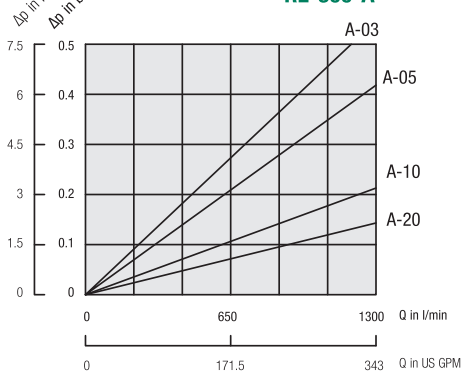

Filter Elements RE-300-G

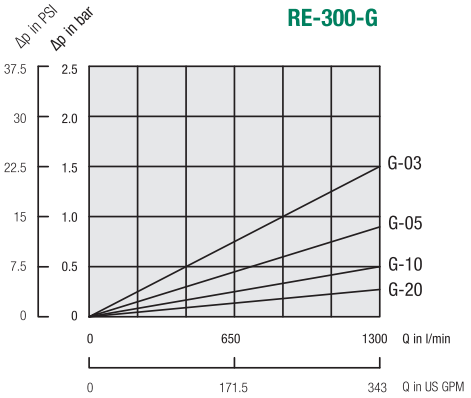

Filter Element RE-...S

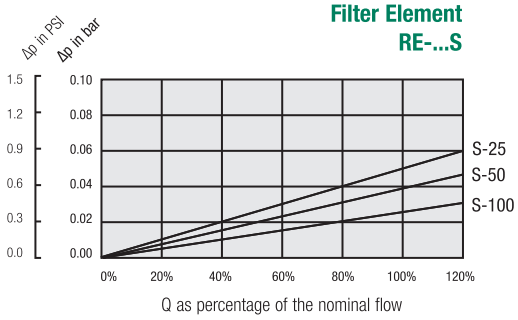

Filter Element RE-...N

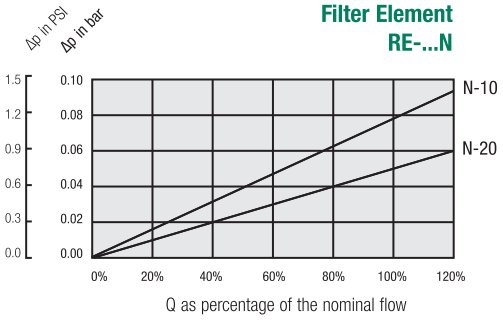

Return-Line Filters ▪ Type RTF-10/15/25



D

Product Description

STAUFF RTF-10/15/25 Return-Line Filters are designed as tank top filters with a maximum operating pressure of 3,4 bar / 49 PSI.

Technical Data

Construction
- Tank Top flange mounting

Materials
- Filter head: Aluminium
- Filter bowl: Polyamide
- Sealings: NBR (Buna-N®)
  FKM (Viton®)
  Other sealing materials on request

Port Connections
- BSP
- NPT
- SAE O-ring thread

Flow Rating
- Up to 95 l/min / 25 US GPM

Operating Pressure
- Max. 3,4 bar / 49 PSI

Burst Pressure
- Min. 10 bar / 145 PSI

Temperature Range
- -20 °C ... +100 °C / -44 °F ... +212 °F
  (Short term up to +110°C / +230 °F)

Filter Elements
- Specifications see page 106

Media Compatibility
- Mineral oils, other fluids on request

Options and Accessories

Valve
- Bypass valve: Opening pressure 1,7 bar / 25 PSI
  (integrated in the filter element) Other settings available on request

Clogging Indicators
- For clogging indicator types please see page 125

Return-Line Filters ▪ Type RTF-10/15/25

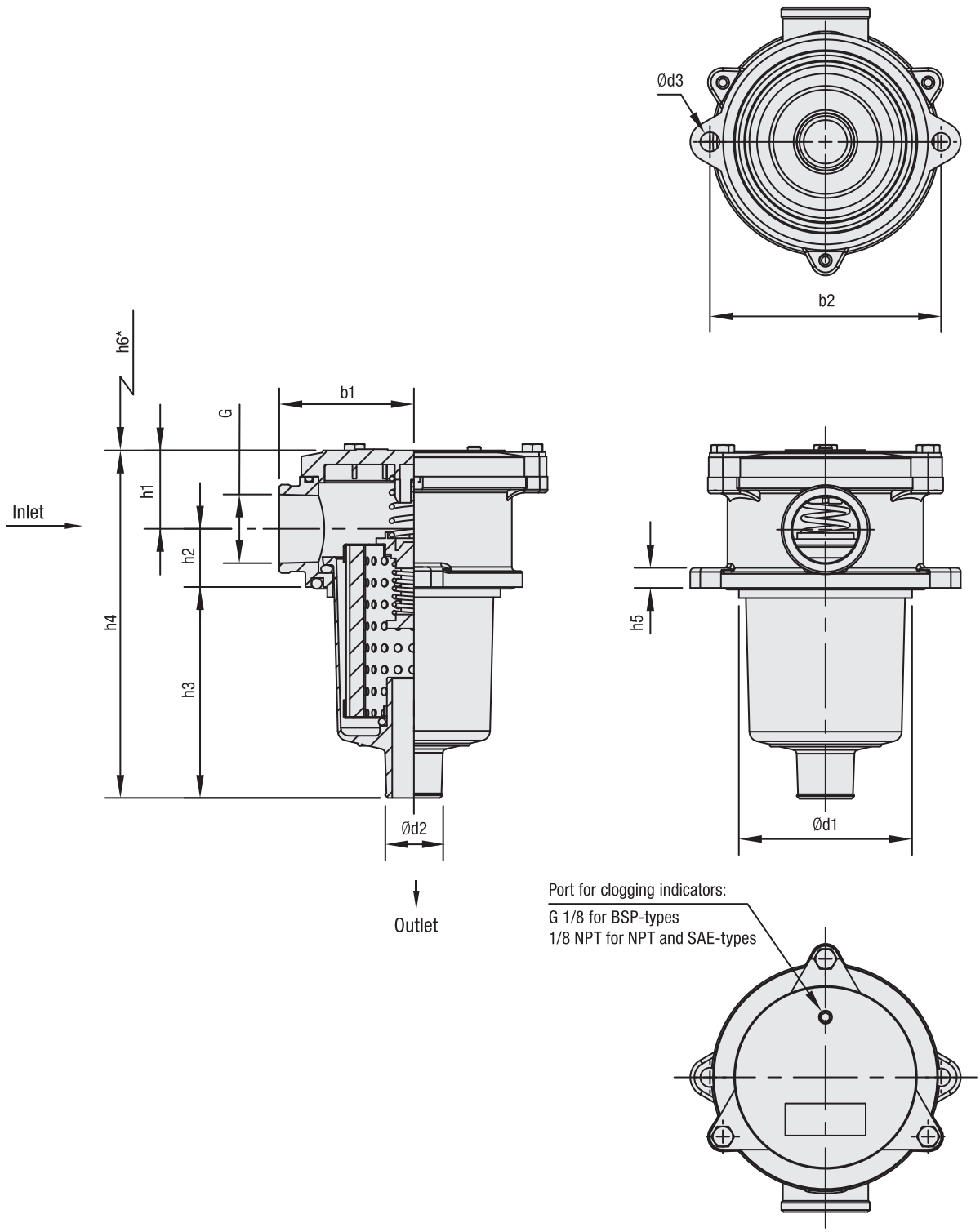

* recommended space for element change

Return-Line Filters ▪ Type RTF-10/15/25

Thread Connection G	Filter Size RTF		
	10	15	25
BSP	1/2	1	1
NPT	1/2	1	1
SAE O-ring	-	1-5/16–12	1-5/16–12

Dimensions (mm/in)	Filter Size RTF		
	10	15	25
h1	26	34	34
	1.02	1.34	1.34
h2	21	29	29
	.83	1.14	1.14
h3	89	103	149
	3.50	4.05	5.87
h4	136	166	212
	5.35	6.53	8.35
h5	8	10	10
	.32	.39	.39
h6	110	130	175
	4.33	5.12	6.89
b1	50	67	67
	1.97	2.64	2.64
b2	90	115	115
	3.54	4.52	4.52
d1	66	86	86
	2.60	3.39	3.39
d2	24	28	28
	.94	1.10	1.10
d3	7	9	9
	.28	.35	.35
Weight (kg/lbs)	0,45	0,9	1
	1	2	2.2

Return-Line Filter Housings / Complete Filters ▪ Type RTF-10/15/25

RTF - 25 - D - 10 - B - G16 - V / X
① ② ③ ④ ⑤ ⑥ ⑦ ⑧

① Type

Return-Line Filter	**RTF**

② Group

Flow	Size
38 l/min / 10 US GPM	**10**
57 l/min / 15 US GPM	**15**
95 l/min / 25 US GPM	**25**

Note: Exact flow will depend on the selected filter element. For technical data please see pages 123 / 124.

③ Filter Material

Material	Max. Δp*collapse	Micron ratings available	Code
Without filter element	-	-	**0**
Inorg. glass fibre	3 bar / 43.5 PSI	10, 25	**G**
Filter paper	3 bar / 43.5 PSI	10, 25	**D**

*Note: Collapse/burst resistance as per ISO 2941
Other materials on request

④ Micron Rating

10 µm	**10**
25 µm	**25**

Note: Other micron ratings on request

⑤ Sealing Material

NBR (Buna®)	**B**
FKM (Viton®)	**V**

Note: Other sealing materials on request

⑥ Connection Style

Connection Style	Group 10	Code	Group 25 and 15	Code
BSP	1/2	**G08**	1	**G16**
NPT	1/2	**N08**	1	**N16**
SAE O-ring Thread	-	**-**	1-5/16–12	**U16**

⑦ Clogging Indicator

Without clogging indicator	**0**
Visual clogging indicator	**V**
Electrical clogging indicator	**E**

Note: See page 125 for more details on indicator ports and types.

⑧ Design Code

Only for information	**X**

Filter Elements ▪ Type RTE

RTE - 25 - D - 10 - B / X
① ② ③ ④ ⑤ ⑥

① Type

Filter Element Series	**RTE**

② Group

According to filter housing

③ Filter Material

Material	Max. Δp*collapse	Micron ratings available	Code
Inorg. glass fibre	3 bar / 43.5 PSI	10, 25	**G**
Filter paper	3 bar / 43.5 PSI	10, 25	**D**

* Note: Collapse/burst resistance as per ISO 2941
Other materials on request

④ Micron Rating

10 µm	**10**
25 µm	**25**

Note: Other micron ratings on request

⑤ Sealing Material

NBR (Buna®)	**B**
FKM (Viton®)	**V**

Note: Other sealing materials on request

⑥ Design Code

Only for information	**X**

Return-Line Filters ▪ Type RTF-20



D

Product Description

STAUFF RTF-20 Return-Line Filters are designed as tank top filters with a maximum operating pressure of 10 bar / 145 PSI and flow rates up to 115 l/min / 30 US GPM. The filter bowl is designed to return the oil beneath the surface thus preventing entrainment of air. RTF-20 series compact design and integral breather make them ideal for mobile hydraulic applications.

Technical Data

Construction
- Tank Top flange mounting

Materials
- Filter head: Aluminium
- Filter bowl & cap: Polyamide
- Sealings: NBR (Buna-N®)
  FKM (Viton®)
  Other sealing materials on request

Port Connections
- BSP
- NPT
- SAE O-ring thread

Flow Rating
- Up to 115 l/min / 30 US GPM

Operating Pressure
- Max. 10 bar / 145 PSI

Burst Pressure
- Min. 30 bar / 435 PSI

Temperature Range
- -20 °C ... +100 °C / -44 °F ... +212 °F
  (Short term up to +110°C / +230 °F)

Integrated Breather
- Filter paper 10 µm
- Filter paper 40 µm

Filter Elements
- Specifications see page 110

Media Compatibility
- Mineral oils, other fluids on request

Options and Accessories

Valve
- Bypass valve: Opening pressure 1,7 bar / 25 PSI
  (integrated in the filter element) Other settings available on request

Clogging Indicators
- For clogging indicator types please see page 125

Return-Line Filters ▪ Type RTF-20

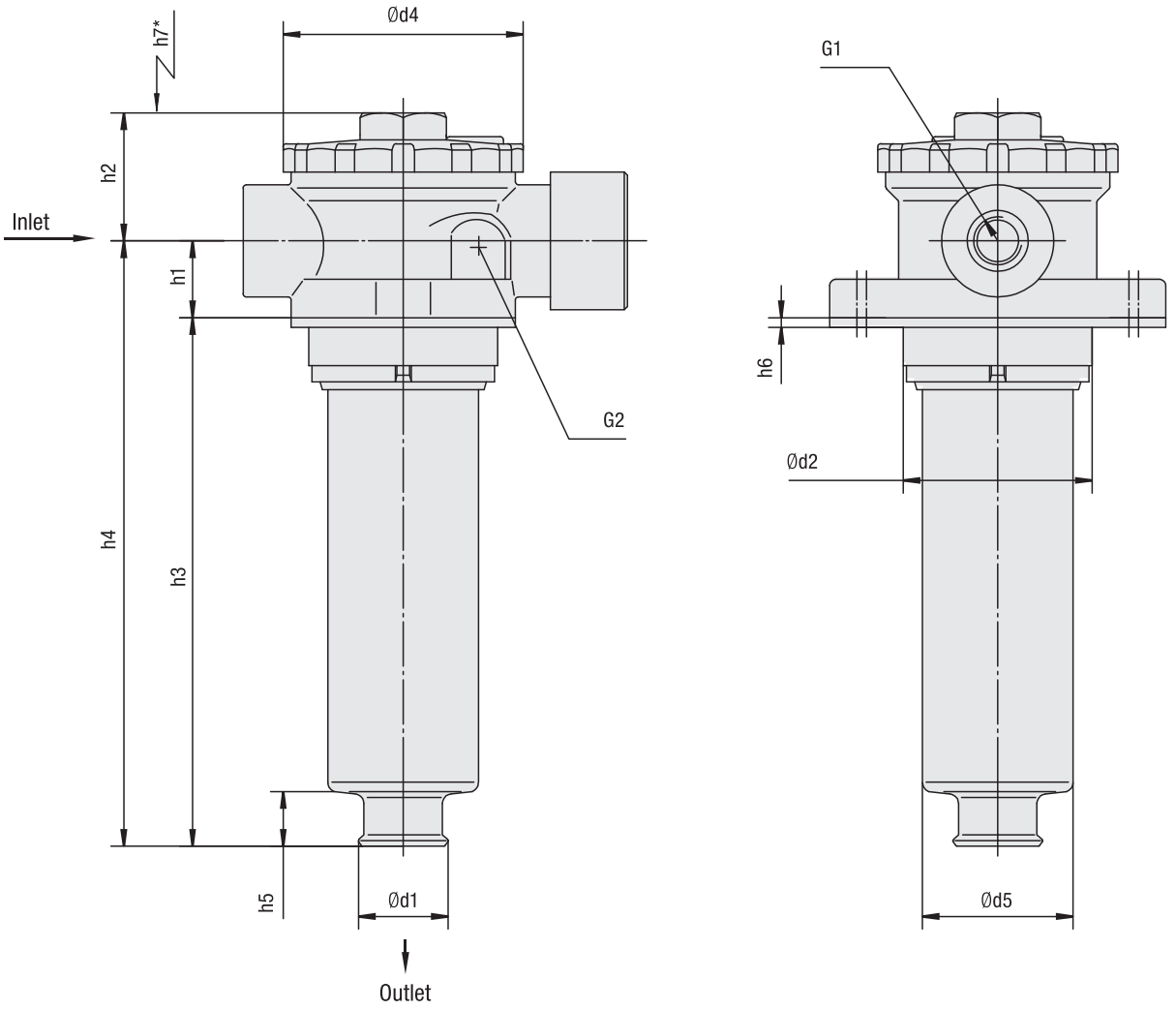

* recommended space for element change

Return-Line Filters ▪ Type RTF-20

Thread Connection G1	Filter Size RTF	
	020	
BSP	1/2	3/4
NPT	1/2	3/4
SAE Thread	3/4–16	

Dimensions (mm/in)	Filter Size RTF
	020
b1	50
	1.97
b2	70
	2.76
b3	82
	3.23
b4	88
	3.46
b5	11
	.43
d1	28
	1.10
d2*	Min. 60 / Max. 63
	Min. 2.36 / Max. 2.48
d3	77
	3.03
d4	75
	2.95
d5	48
	1.89
h1	24
	.94
h2	37,5
	1.48
h3	178
	7.01
h4	202
	7.95
h5	16
	.63
h6	2
	.07
h7	210
	8.27
G2	G1/8 or 1/8 NPT

* recommended diameter for mounting hole

Return-Line Filter Housings / Complete Filters ▪ Type RTF-20

RTF - 20 - D - 10 - B - G08 - V - L10 - D / X
① ② ③ ④ ⑤ ⑥ ⑦ ⑧ ⑨ ⑩

D

① Type

Return-Line Filter	**RTF**

② Group

Flow	Size
115 l/min / 30 US GPM	**20**

Note: Exact flow will depend on the selected filter element. For technical data please see pages 123 / 124..

③ Filter Material

Material	Max. Δp*collapse	Micron ratings available	Code
Without filter element	-	-	**0**
Inorg. glass fibre	25 bar / 363 PSI	10, 20	**G**
Filter paper	10 bar / 145 PSI	10	**D**

*Note: Collapse/burst resistance as per ISO 2941
Other materials on request

④ Micron Rating

10 µm	**10**
20 µm	**20**

Note: Other micron ratings on request

⑤ Sealing Material

NBR (Buna®)	**B**
FKM (Viton®)	**V**

Note: Other sealing materials on request

⑥ Connection Style

Connection Style	Thread	Code
BSP	1/2	**G08**
BSP	3/4	**G12**
NPT	1/2	**N08**
NPT	3/4	**N12**
SAE O-ring Thread	3/4–16	**U08**

⑦ Clogging Indicator

No clogging indicator	**0**
Visual clogging indicator	**V**
Electrical clogging indicator	**E**

Note: See page 125 for more details on indicator ports and types.

⑧ Breather

10 µm Filter Paper	**L10**
40 µm Filter Paper	**L40**

⑨ Dipstick

Without dipstick (standard)	**none**
With dipstick	**D**

⑩ Design Code

Only for information	**X**

Filter Elements ▪ Type RTE

RTE - 20 - D - 10 - B / X
① ② ③ ④ ⑤ ⑥

① Type

Filter Element Series	**RTE**

② Group

According to filter housing

③ Filter Material

Material	Max. Δp*collapse	Micron ratings available	Code
Inorg. glass fibre	25 bar / 363 PSI	10, 20	**G**
Filter paper	10 bar / 145 PSI	10	**D**

*Note: Collapse/burst resistance as per ISO 2941
Other materials on request

④ Micron Rating

10 µm	**10**
20 µm	**20**

Note: Other micron ratings on request

⑤ Sealing Material

NBR (Buna®)	**B**
FKM (Viton®)	**V**

Note: Other sealing materials on request

⑥ Design Code

Only for information	**X**

Air Filter Elements ▪ Type RTEA

REA-RTF - 20 - L - 10 - B / X
① ② ③ ④ ⑤ ⑥

① Type

Air Filter Element Series	**REA-RTF**

② Group

Air filter for RTF-20	**20**

③ Filter Material

Filter Paper	**L**

Note: Other materials on request

④ Micron Rating

10 µm	**10**

Note: Other micron ratings on request

⑤ Sealing Material

NBR (Buna®)	**B**

Note: Other sealing materials on request

⑥ Design Code

Only for information	**X**

Return-Line Filters ▪ Type RTF-40



D

Product Description

STAUFF RTF-40 Return-Line Filters are designed as tank top filters with a maximum operating pressure of 6,9 bar / 100 PSI.
The filter bowl is designed to return the oil beneath the surface thus preventing entrainment of air.

Technical Data

Construction
- Tank Top flange mounting

Materials
- Filter head: Aluminium
- Filter bowl: Bowl length 1: Polyamide
  Bowl length 2: Steel
- Sealings: NBR (Buna-N®)
  Other sealing materials on request

Port Connections
- BSP
- NPT
- SAE O-ring thread
- SAE flange

Flow Rating
- Up to 378 l/min / 100 US GPM

Operating Pressure
- Max. 6,9 bar / 100 PSI

Temperature Range
- -25 °C ...+95 °C / -13 °F ... +203 °F

Filter Elements
- RTE-47 with integrated bypass valve, single stack length
- RTE-48 bypass valve integrated in the filter head,
  equivalent to the HF-4 elements, single and double stack lengths
- RTE-49 bypass valve integrated in the filter head,
  single and double stack lengths
- Specifications see page 114

Media Compatibility
- Mineral oils, other fluids on request

Options and Accessories

Valve
- Bypass valve: Opening pressures 1 bar / 14.5 PSI ±10 % or
  1,7 bar / 25 PSI ±10 %
  RTF-47: Bypass intergrated in the filter element
  RTF-48/49: Bypass integrated in the filter head

Clogging Indicators
- For clogging indicator types please see page 125

D

Return-Line Filters ▪ Type RTF-40

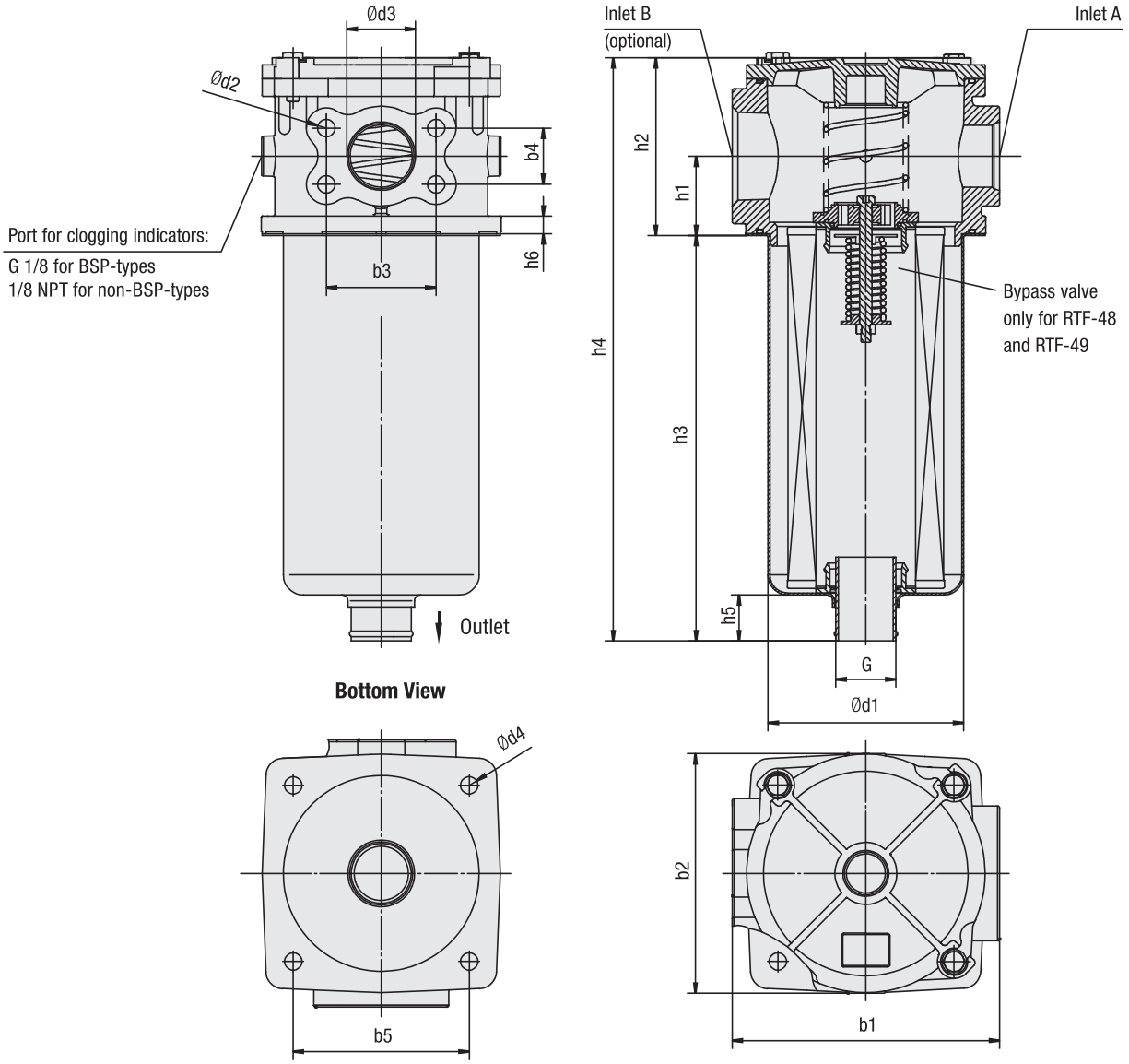

Filter Elements ▪ Types RTE-47 / RTE-48 / RTE-49

RTE-47
- with integrated bypass valve
- single stack length

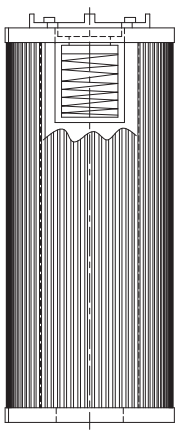

RTE-48
- bypass valve integrated in the filter head
- equivalent to the HF-4 elements
- single and double stack lengths

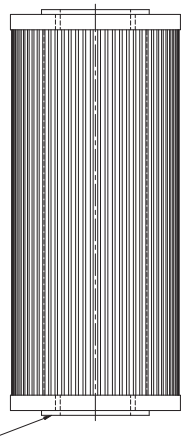

RTE-49
- bypass valve integrated in the filter head
- single and double stack lengths

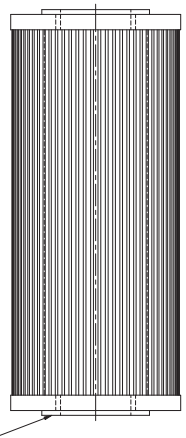

Return-Line Filters ▪ Type RTF-40

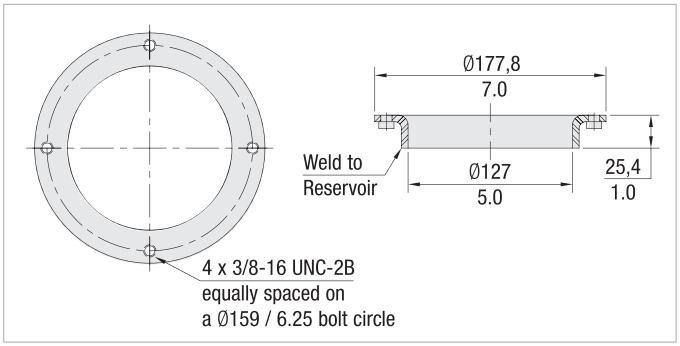

RTF-40 Series Weld Ring WR-40

The WR-40 weld ring is welded directly to the hydraulic reservoir, eliminating the need for drilling and tapping mounting holes in the reservoir.

Material: Carbon Steel

D

Thread Connection Combinations	Filter Size RTF			
	4...S1		4...S2	
	Inlet A	Inlet B	Inlet A	Inlet B
BSP	1-1/4 and 1-1/2 SAE Flange	None	1-1/4 and 1-1/2 SAE Flange	None
BSP	1-1/4 and 1-1/2 SAE Flange	1-1/4	1-1/4 and 1-1/2 SAE Flange	1-1/4
NPT	1-1/4 and 1-1/2 SAE Flange	None	1-1/4 and 1-1/2 SAE Flange	None
NPT	1-1/4 and 1-1/2 SAE Flange	1-1/4	1-1/4 and 1-1/2 SAE Flange	1-1/4
NPT	1-1/2	None	1-1/2	None
NPT	1-1/2	1-1/4	1-1/2	1-1/4
NPT	1-1/2	1-1/2	1-1/2	1-1/2
SAE	1-5/8–12	None	1-5/8–12	None
SAE	1-5/8–12	1-5/8–12	1-5/8–12	1-5/8–12
SAE	1-5/8–12	1-7/8–12	1-5/8–12	1-7/8–12
SAE	1-5/8–12	2-1/2–12	1-5/8–12	2-1/2–12
SAE	1-7/8–12	1-7/8–12	1-7/8–12	1-7/8–12
Combination SAE & NPT	1-5/8–12	2	1-5/8–12	2

Dimensions (mm/in)	Filter Size RTF	
	4...S1	4...S2
h1	50	50
	1.97	1.97
h2	112	112
	4.41	4.41
h3	263	475
	10.35	18.70
h4	385	587
	15.16	23.11
h5	21	38
	.83	1.50
h6	11	11
	.43	.43
b1	170	170
	6.70	6.70
b2	152	152
	5.98	5.98
b3	69.9	69.9
	2.75	2.75
b4	35,6	35,6
	1.40	1.40
b5	112	112
	4.41	4.41
d1	122	126
	4.80	4.96
d2	M12 or	M12 or
	1/2–13 UN	1/2–13 UN
d3	38,1	38,1
	1.50	1.50
d4	11	11
	.43	.43
G	G1-1/2 or 1-1/2 NPT	G1-1/2 or 1-1/2 NPT

Dimensions in mm / in

Return-Line Filter Housings / Complete Filters ▪ Type RTF-40

RTF - 48 - D - 10 - B - G20+C324M/G20 - B1 - S2 - V / X

① ② ③ ④ ⑤ ⑥ ⑦ ⑧ ⑨ ⑩

D

① Type

Return-Line Filter	**RTF**

② Group

Flow	Size
190 l/min / 50 US GPM	**47**
190 l/min / 50 US GPM	**48**
190 l/min / 50 US GPM	**49**

Note: Exact flow will depend on the selected filter element. For technical data please see pages 123 / 124. For element length 2 (only RTF-48 / RTF-49) please double relating flow values.

③ Filter Material

Material	Max. Δp*collapse	Micron ratings available	Code
Without filter element	-	-	**0**
Inorg. glass fibre	10 bar / 145 PSI	3, 5, 10, 25	**G**
Filter paper	10 bar / 145 PSI	10, 25	**D**

*Note: Collapse/burst resistance as per ISO 2941
Other materials on request

④ Micron Rating

3 µm	**03**
5 µm	**05**
10 µm	**10**
25 µm	**25**

Note: Other micron ratings on request

⑤ Sealing Material

NBR (Buna®)	**B**

Note: Other sealing materials on request

⑥ Connection Style

Connection Style	Group Port A	Group Port B	Code
BSP	1-1/4 and 1-1/2 SAE Flange	None	**G20+C324M/O**
BSP	1-1/4 and 1-1/2 SAE Flange	1-1/4	**G20+C324M/G20**
NPT	1-1/4 and 1-1/2 SAE Flange	None	**N20+C324M/O**
NPT	1-1/4 and 1-1/2 SAE Flange	1-1/4	**N20+C324M/N20**
NPT	1-1/2	None	**N24/O**
NPT	1-1/2	1-1/4	**N24/N20**
NPT	1-1/2	1-1/2	**N24/N24**
SAE	1-5/8-12	None	**U20/O**
SAE	1-5/8-12	1-5/8-12	**U20/U20**
SAE	1-5/8-12	1-7/8-12	**U20/U24**
SAE	1-5/8-12	2-1/2-12	**U20/U40**
SAE	1-7/8-12	1-7/8-12	**U24/U24**
Combination NPT & SAE	1-5/8-12	2	**U20/N32**

⑦ Valve

No bypass	**0**
1 bar / 15 PSI	**B1.0**
1,7 bar / 24.6 PSI	**B1.7**

⑧ Length

Bowl Length 1 (1 element)	**S1**
Bowl Length 2 (2 elements)	**S2**

Note: RTF-47 size available in S1 bowl length only.

⑨ Clogging Indicator

No clogging indicator	**0**
Visual clogging indicator	**V**
Electrical clogging indicator	**E**

Note: See page 125 for more details on indicator ports and options.

⑩ Design Code

Only for information	**X**

Filter Elements ▪ Type RTE

RTE - 48 - D - 10 - B / X

① ② ③ ④ ⑤ ⑥

① Type

Filter Element Series	**RTE**

② Group

According to filter housing

③ Filter Material

Material	Max. Δp*collapse	Micron ratings available	Code
Inorg. glass fibre	10 bar / 145 PSI	3, 5, 10, 25	**G**
Filter paper	10 bar / 145 PSI	10, 25	**D**

*Note: Collapse/burst resistance as per ISO 2941
Other materials on request

④ Micron Rating

3 µm	**03**
5 µm	**05**
10 µm	**10**
25 µm	**25**

Note: Other micron ratings on request

⑤ Sealing Material

NBR (Buna®)	**B**

Note: Other sealing materials on request

⑥ Design Code

Only for information	**X**

Return-Line Filters ▪ Type RTF-50



D

Product Description

STAUFF RTF-50 Return-Line Filters are designed for tank top applications with a maximum pressure of 6,9 bar / 100 PSI. The filter bowl is designed to return the oil beneath the surface thus preventing entrainment of air. The RTF-58 elements interchange with the popular “K” series and RTF-59 elements interchange with the“RE-409” series elements.

Technical Data

Construction
- Tank Top flange mounting

Materials
- Filter head: Aluminium
- Filter bowl: Bowl length 1: Polyamide
  Bowl length 2: Steel
- Sealings: NBR (Buna-N®)
  Other sealing materials on request

Port Connections
- BSP
- NPT
- SAE O-ring thread

Flow Rating
- Up to 379 l/min / 100 US GPM

Operating Pressure
- Max. 6,9 bar / 100 PSI

Temperature Range
- -25 °C ...+95 °C / -13 °F ... +203 °F

Filter Elements
- Specifications see page 118

Media Compatibility
- Mineral oils, other fluids on request

Options and Accessories

Valve
- Bypass valve: Opening pressures 1 bar / 14.5 PSI ±10 % or 1,7 bar / 25 PSI ±10 %
  Other settings available on request

Clogging Indicators
- For clogging indicator types please see page 125

D

Return-Line Filters ▪ Type RTF-50

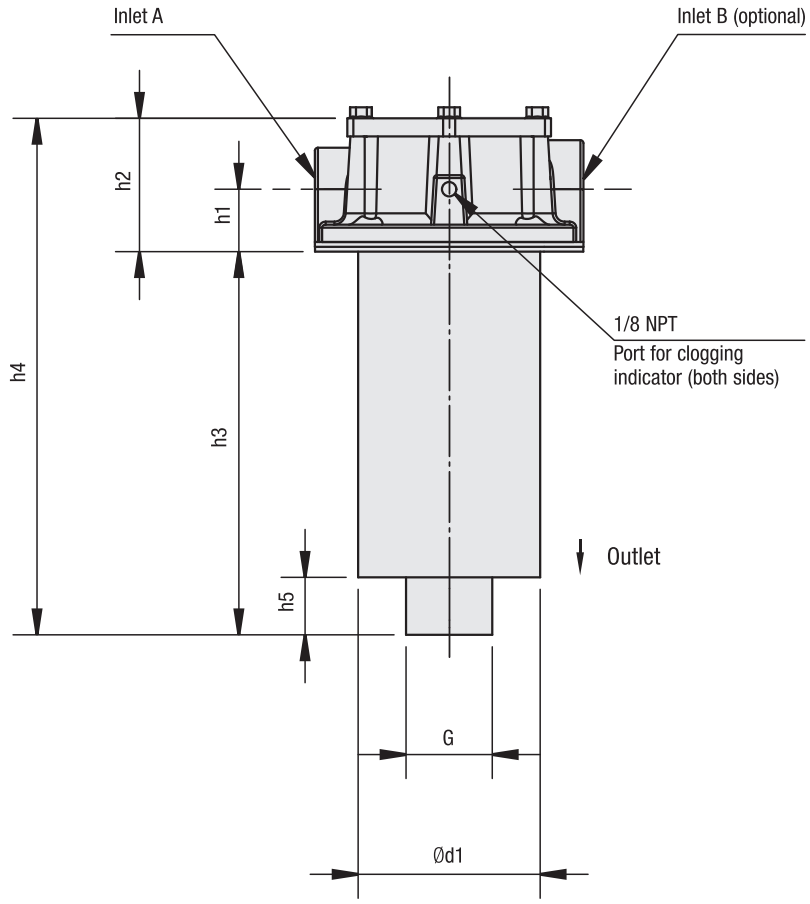

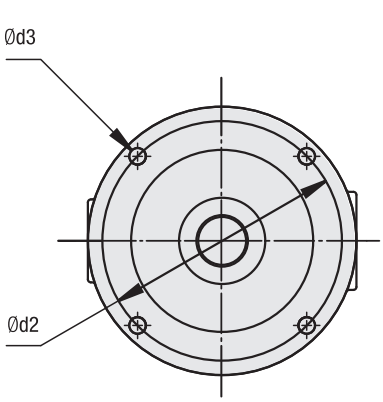

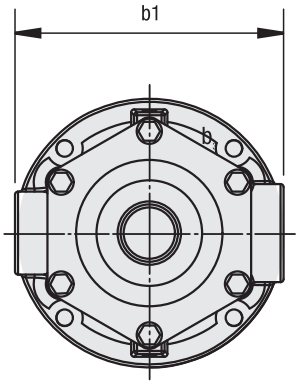

Return-Line Filters ▪ Type RTF Accessories

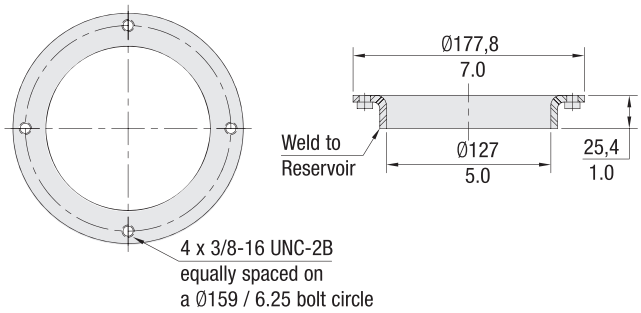

RTF-50 Series Weld Ring WR-40

The WR-40 weld ring is welded directly to the hydraulic reservoir, eliminating the need for drilling and tapping mounting holes in the reservoir.

Material: Carbon Steel

Dimensions in mm / in

Return-Line Filters ▪ Type RTF-50

Thread Connection Combinations	Filter Size RTF			
	5...S1		5...S2	
	Inlet A	Inlet B	Inlet A	Inlet B
NPT (N)	1-1/4	None	1-1/4	None
NPT (NM)	1-1/4	1-1/2	1-1/4	1-1/2
NPT (M)	None	1-1/2	None	1-1/2
Combination SAE & NPT (SM)	1-5/8–12	1-1/2	1-5/8–12	1-1/2
SAE (S)	1-5/8–12	None	1-5/8–12	None
SAE (T)	None	1-7/8–12	None	1-7/8–12
SAE (ST)	1-5/8–12	1-7/8–12	1-5/8–12	1-7/8–12
Combination NPT & SAE (NT)	1-1/4	1-7/8–12	1-1/4	1-7/8–12

Dimensions (mm/in)	Filter Size RTF	
	5...S1	5...S2
h1	49,3	42,3
	1.94	1.67
h2	95,5	88,5
	3.78	3.48
h3	241,3	485,9
	9.50	19.13
h4	336,8	574,9
	13.26	22.61
h5	29,5	38,1
	1.16	1.50
b1	177,8	177,8
	7.00	7.00
d1	124,8	126
	4.91	4.96
d2	158,7	158,7
	6.25	6.25
d3	11,2	11,2
	.44	.44
G	1-1/2 NPT	1-1/2 NPT

Return-Line Filter Housings / Complete Filters ▪ Type RTF-50

RTF - 58 - D - 10 - B - N20/O - B1.7 - S2 - V / X

① ② ③ ④ ⑤ ⑥ ⑦ ⑧ ⑨ ⑩

① Type

Return-Line Filter	**RTF**

② Group

Flow	Size
Group size 58	**58**
Group size 59	**59**

Note: Exact flow will depend on the selected filter element. For technical data please see pages 123 / 124.

③ Filter Material

Material	Max. Δp*collapse	Micron ratings available	Code
Without filter element	-	-	**0**
Inorg. glass fibre	10 bar / 145 PSI	3, 5, 10, 25	**G**
Filter paper	5 bar / 72.5 PSI	10, 25	**D**

*Note: Collapse/burst resistance as per ISO 2941
Other materials on request

④ Micron Rating

3 µm	**03**
5 µm	**05**
10 µm	**10**
25 µm	**25**

Note: Other micron ratings on request

⑤ Sealing Material

NBR (Buna®)	**B**

Note: Other sealing materials on request

⑥ Connection Style

Connection Style	Group		Code
	Port A	Port B	
NPT	1-1/4	None	**N20/O**
NPT	1-1/4	1-1/2	**N20/N24**
NPT	None	1-1/2	**O/N24**
Combination SAE & NPT	1-5/8-12	1-1/2	**U20/N24**
SAE	1-5/8-12	None	**U20/O**
SAE	None	1-7/8-12	**O/U24**
SAE	1-5/8-12	1-7/8-12	**U20/U24**
Combination NPT & SAE	1-1/4	1-7/8-12	**N20/U24**

⑦ Valve

No bypass	**0**
1 bar / 15 PSI	**B1.0**
1,7 bar / 24.6 PSI	**B1.7**

⑧ Length

Bowl Length 1 (1 element)	**S1**
Bowl Length 2 (2 elements)	**S2**

⑨ Clogging Indicator

No clogging indicator	**0**
Visual clogging indicator	**V**
Electrical clogging indicator	**E**

Note: See page 125 for more details on indicator ports and types.

⑩ Design Code

Only for information	**X**

Filter Elements ▪ Type RTE

RTE - 58 - D - 10 - B - X

① ② ③ ④ ⑤ ⑥

① Type

Filter Element Series	**RTE**

② Group

According to filter housing

③ Filter Material

Material	Max. Δp*collapse	Micron ratings available	Code
Inorg. glass fibre	10 bar / 145 PSI	3, 5, 10, 25	**G**
Filter paper	5 bar / 72.5 PSI	10, 25	**D**

*Note: Collapse/burst resistance as per ISO 2941
Other materials on request

④ Micron Rating

3 µm	**03**
5 µm	**05**
10 µm	**10**
25 µm	**25**

Note: Other micron ratings on request

⑤ Sealing Material

NBR (Buna®)	**B**

Note: Other sealing materials on request

⑥ Design Code

Only for information	**X**

Return-Line Filters ▪ Type RTF-N



Product Description

STAUFF RTF-N Return-Line Insert Filters allow for a choice of installation configurations which permits custom reservoir design with an in tank filtering system. The filters are installed semi-immersed or totally immersed into a reservoir. The filtration flow is from inside to the outside of the element which ensures that all the contaminant is collected inside the element itself avoiding contact with the reservoir fluid during element change. The combination of magnetic pre-filtration and high filtration efficiency results in a cost effective and versatile filtration system.

Technical Data

Construction
- Insert filter

Materials
- Flange plate: Aluminium
- Magnet rod: Steel
- Bypass: Steel
- Diffuser: Steel
- Sealings: NBR (Buna-N®)
  FKM (Viton®)
  Other sealing materials on request

Flow Rating
- Up to 500 l/min / 132 US GPM

Operating Pressure
- Max. 10 bar / 145 PSI

Temperature Range
- -29 °C ...+107 °C / -20 °F ... +225 °F

Filter Elements
- Specifications see page 122

Media Compatibility
- Mineral oils, other fluids on request

Options and Accessories

Valve
- Bypass valve: Opening pressure 1,5 bar / 22 PSI
  (integrated in the filter element) Other settings available on request

Return-Line Filters ▪ Type RTF-N

D

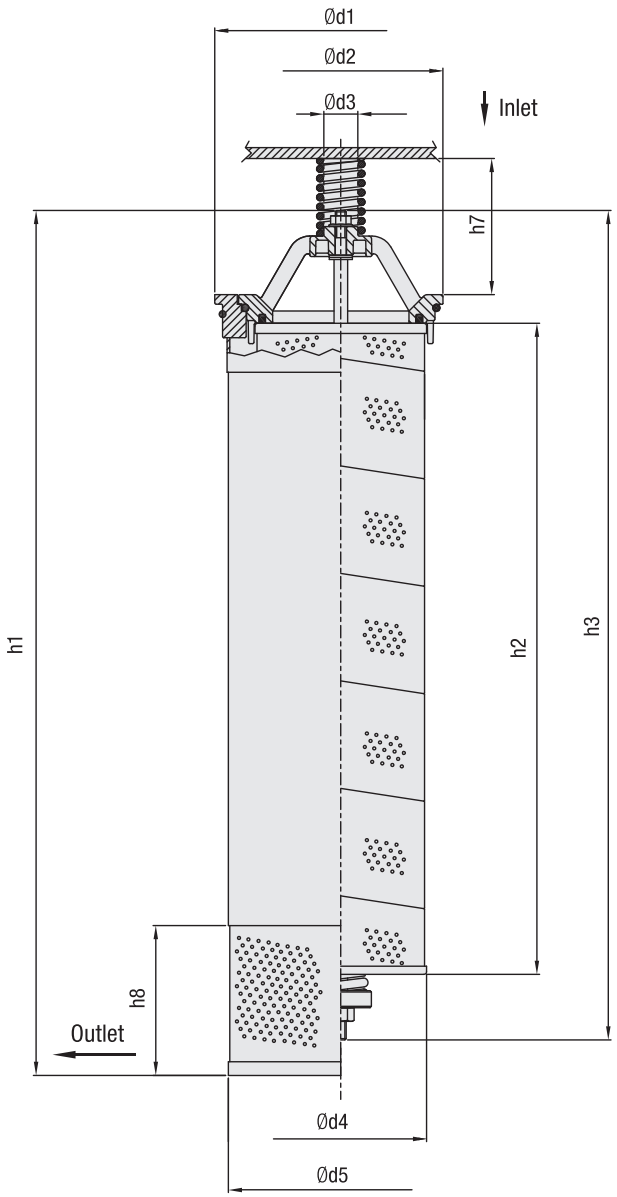

Tank hole for mounting Without Diffusor

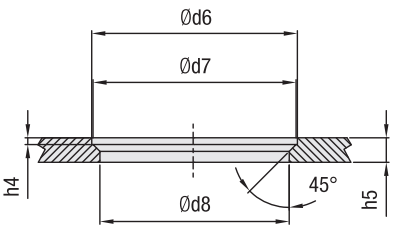

Tank hole for mounting With Diffusor

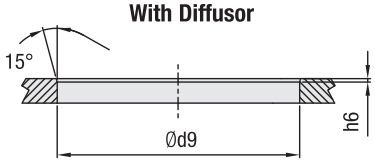

Mounting Options

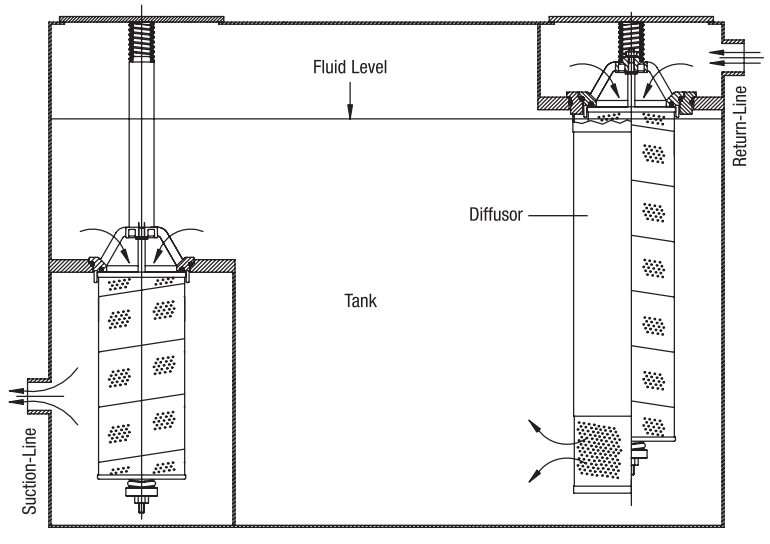

Return-Line Filters ▪ Type RTF-N

Dimensions (mm/in)	Filter Size RTF-N	
	390	500
h1	445	635
	17.52	25.00
h2	290	478
	11.42	18.82
h3	421	609
	16.57	23.98
h4	5	5
	.20	.20
h5	18	18
	.71	.71
h6	2,5	2,5
	.10	.10
h7	100	100
	3.94	3.94
h8	110	110
	4.33	4.33
d1	185	185
	7.28	7.28
d2	150	150
	5.91	5.91
d3	25	25
	.98	.98
d4	126	126
	4.95	4.95
d5	165	165
	6.50	6.50
d6	151	151
	5.94	5.94
d7	149	149
	5.87	5.87
d8	139	139
	5.47	5.47
d9	178	178
	7.01	7.01

Return-Line Filter Housings / Complete Filters ▪ Type RTF-N

RTF-N - 500 - E - 10 - B - B1.5 - D / X

① ② ③ ④ ⑤ ⑥ ⑦ ⑧

① Type

Return-Line Insert Filter	**RTF-N**

② Group

Flow	Size
390 l/min /103 US GPM	**390**
500 l/min /132 US GPM	**500**

Note: Exact flow will depend on the selected filter element. For technical data please see pages 13 / 124.

③ Filter Material

Material	Max. Δp*collapse	Micron ratings available	Code
Without filter element	-	-	**0**
Inorg. glass fibre	10 bar / 145 PSI	3, 5, 10, 20	**E**
Filter paper	10 bar / 145 PSI	10	**L**

*Note: Collapse/burst resistance as per ISO 2941
Other materials on request

④ Micron Rating

3 µm	**03**
5 µm	**05**
10 µm	**10**
20 µm	**20**

Note: Other micron ratings on request

⑤ Sealing Material

NBR (Buna®)	**B**
FKM (Viton®)	**V**

Note: Other sealing materials on request

⑥ Bypass Setting

1,5 bar / 22 PSI	**B1.5**

⑦ Options

Without diffusor	**0**
With diffusor	**D**

⑧ Design Code

Only for information	**X**

Filter Elements ▪ Type RA

RA - 500 - E - 10 - B / X

① ② ③ ④ ⑤ ⑥

① Type

Element for Insert Filter	**RA**

② Group

According to filter housing

③ Filter Material

Material	Max. Δp*collapse	Micron ratings available	Code
Inorg. glass fibre	10 bar / 145 PSI	3, 5, 10, 20	**E**
Filter paper	10 bar / 145 PSI	10	**L**

*Note: Collapse/burst resistance as per ISO 2941
Other materials on request

④ Micron Rating

3 µm	**03**
5 µm	**05**
10 µm	**10**
20 µm	**20**

Note: Other micron ratings on request

⑤ Sealing Material

NBR (Buna®)	**B**
FKM (Viton®)	**V**

Note: Other sealing materials on request

⑥ Design Code

Only for information	**X**

Return-Line Filters ▪ Type RTF Flow Characteristics

The following characteristics are valid for mineral oils with a density of 0,85 kg/dm³ and the kinematic viscosity of 30 mm²/s (30cSt). The characteristics have been determined in accordance to ISO 3968. Multipass filter ratings have been obtained in accordance to ISO 16889. The housing pressure drop is directly proportional to the oil density. Contact STAUFF for details.

Filter Housing RTF-20

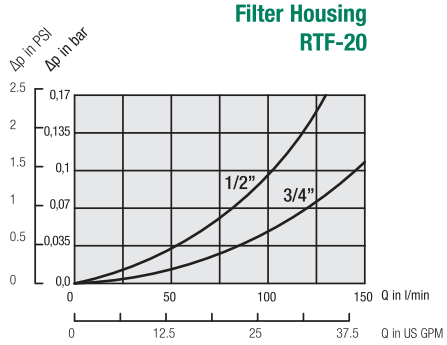

Filter Breather RTEA-20

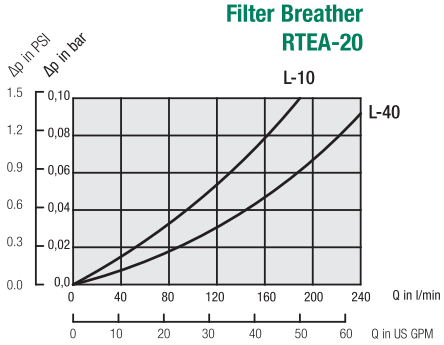

Filter Elements RTE-20

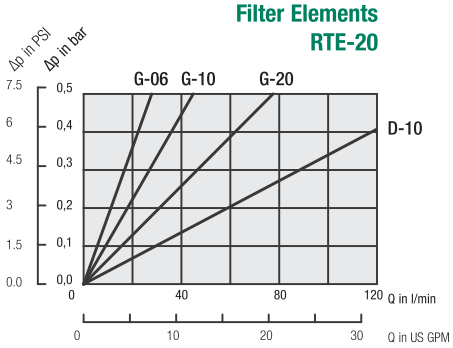

Filter Housing RTF-10/15/25

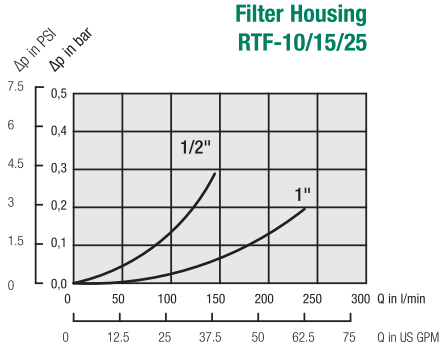

Filter Elements RTE-10

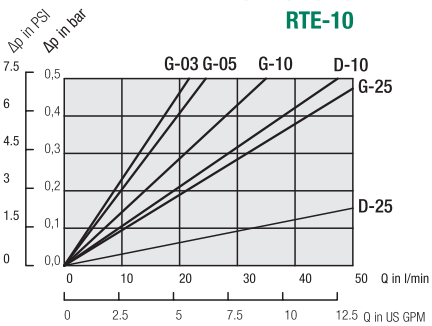

Filter Elements RTE-15

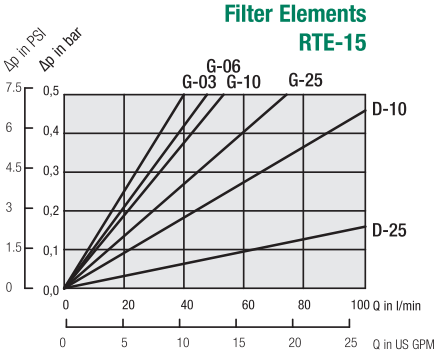

Filter Elements RTE-25

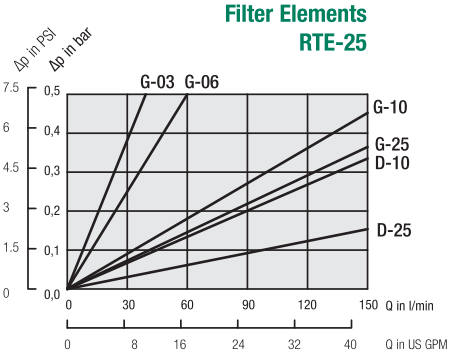

Filter Housing RTF-40

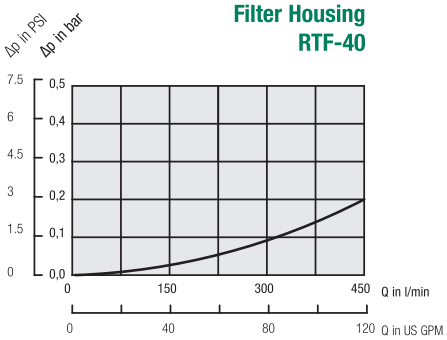

Filter Elements RTE-47-D

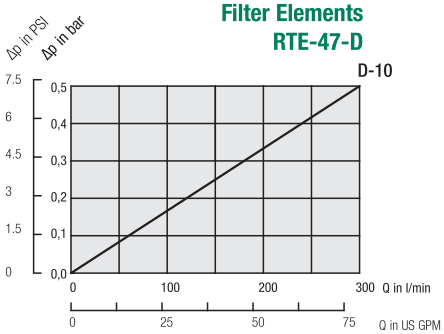

Filter Elements RTE-47-G

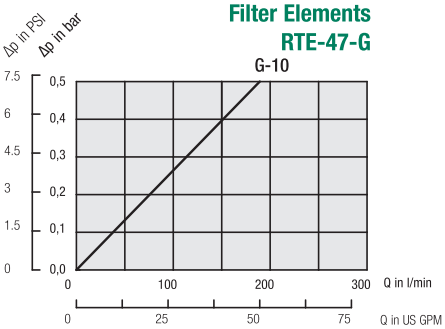

Filter Elements RTE-48-D

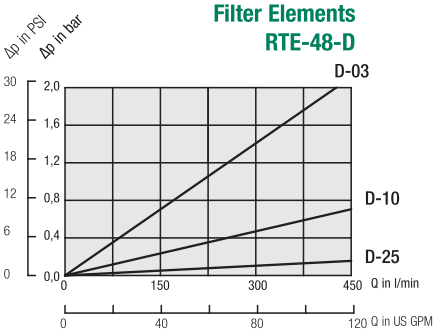

Filter Elements RTE-48-G

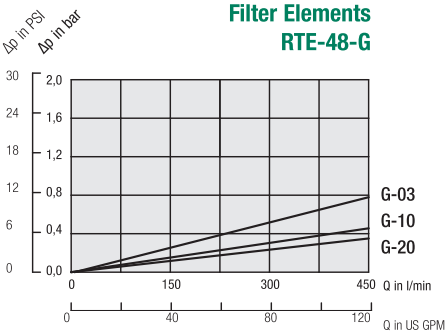

D

Return-Line Filters ▪ Type RTF Flow Characteristics

The following characteristics are valid for mineral oils with a density of 0,85 kg/dm³ and the kinematic viscosity of 30 mm²/s (30cSt). The characteristics have been determined in accordance to ISO 3968. Multipass filter ratings have been obtained in accordance to ISO 16889. The housing pressure drop is directly proportional to the oil density. Contact STAUFF for details.

D

Filter Elements RTE-49-D

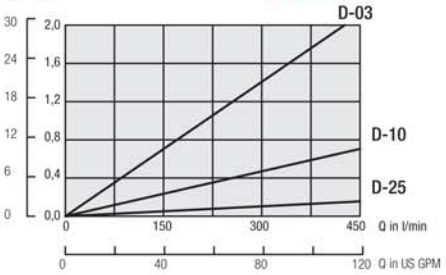

Filter Elements RTE-49-G

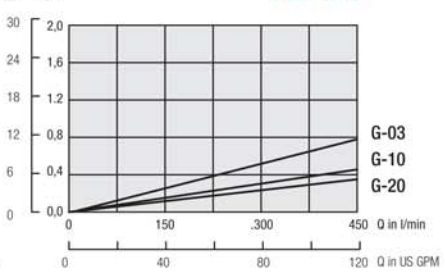

Filter Housing RTF-50

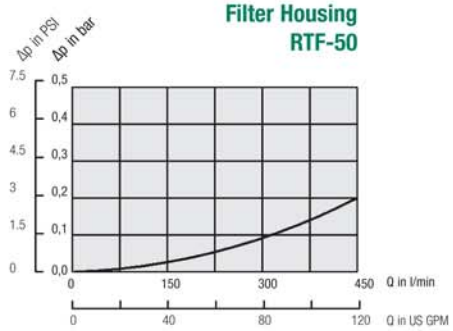

Filter Elements RTE-58-D

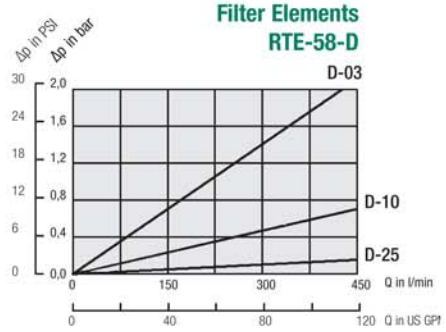

Filter Elements RTE-58-G

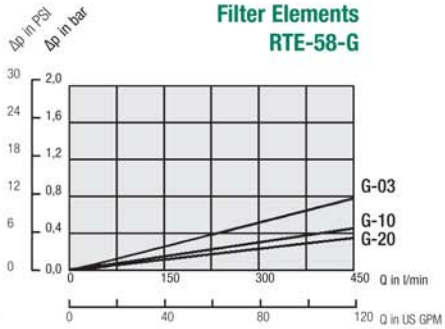

Filter Elements RTE-59-D

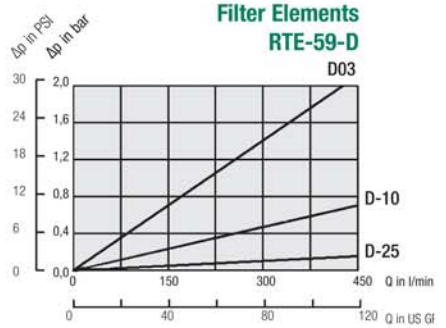

Filter Elements RTE-59-G

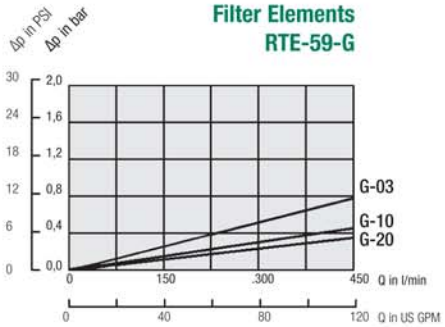

Note: Element pressure drop curves are for "S1" single elements. For "S2" double elements use 50% of the "S1" Value.

Bypass Valve RTF-N

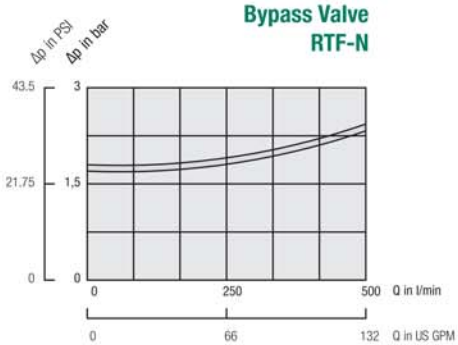

Filter Elements RA-390-L

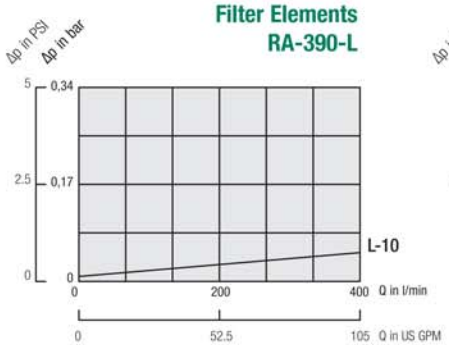

Filter Elements RA-390-E

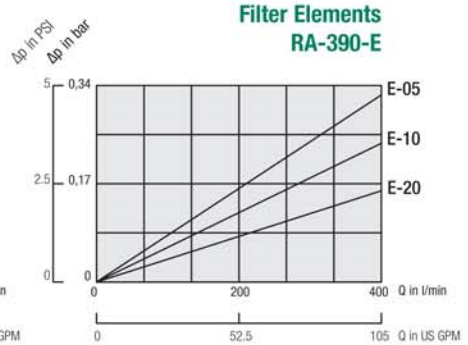

Filter Elements RA-500-L

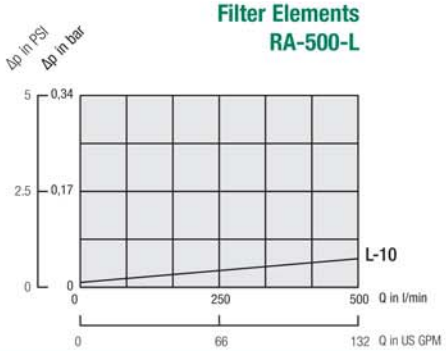

Filter Elements RA-500-E

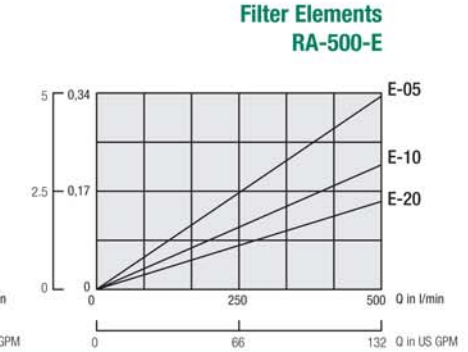

RTF Filter Indicators

Visual Indicators

SPG-C-...-B02-...

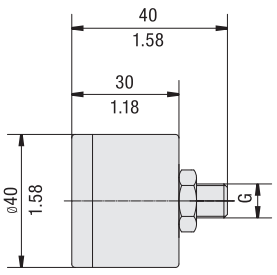

Material for movement and pressure element: Brass

SPG-C-...-N02-...

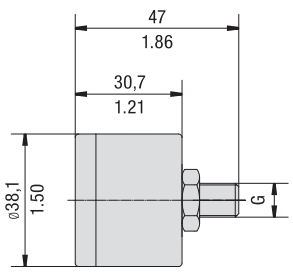

Material for movement and pressure element: Brass



SPG-C-...-B02-..



SPG-C-...-N02-...

D

Visual Pressure Clogging Indicators							Order Code
Thread Connection G		Unit of scale	Range of scale	Coloured Segments			
				Green	Yellow	Red	
BSP	1/8	bar	0 ... 2,5	0 ... 1,2	1,2 ... 1,5	1,5 ... 2,5	SPG-C-040-00002.5-02-P-B02-402923
	1/8	bar	0 ... 4	0 ... 2,5	2,5 ... 3	3 ... 4	SPG-C-040-00004-02-P-B02-402922
	1/8	bar	0 ... 12	without coloured segments			SPG-C-040-00012-02-P-B02
NPT	1/8	PSI	0 ... 100	0 ... 13	13 ... 15	15 ... 100	SPG-C-040-00100-03-P-N02-402927
	1/8	PSI	0 ... 100	0 ... 21	21 ... 25	25 ... 100	SPG-C-040-00100-03-P-N02-402928

Electrical Clogging Switch

Order Code

Limit-Switch - G42NO - S - B02 - B1.3

① ② ③ ④ ⑤

① Type

Limit-Switch	

② Connector Type

Electrical Clogging Switch 10 V ... 42 V, NO	G42NO
Electrical Clogging Switch 10 V ... 42 V, NC	G42NC
Electrical Clogging Switch 10 V ... 250 V, two-way contact (only for Plug Type W)	G230

③ Plug Type

M12 Five-Pin Connector according to IEC 61076-2-101	M12
AMP-Junior-Timer Plug	A
DEUTSCH Plug DT04-2P	D
Rubber boot	S
90 degree Polyamide cap (only for Connector Type G230)	W

④ Thread Type

1/8 BSP	B02
1/8 NPT	N02

⑤ Pressure Setting

1,3 bar / 18.8 PSI	B1.3

Note: Technical Data for Limit-Switch types please see Page 73.

M12

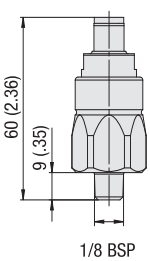

1/8 BSP
1/8 NPT

A

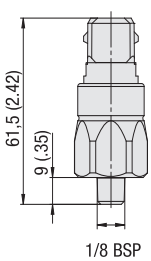

1/8 BSP
1/8 NPT

D

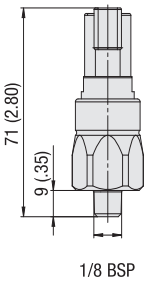

1/8 BSP
1/8 NPT

S

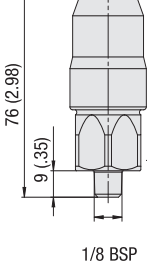

1/8 BSP
1/8 NPT

W

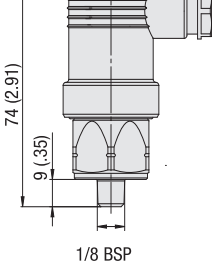

1/8 BSP
1/8 NPT

Note: The customer / user carries the responsibility for the electrical connection.

Dimensional drawings: All dimensions in mm/in.