D118

2/2 – DRY - MICRO SOLENOID VALVE - Normally closed (N.C.)

Series D118 - Coil Z610A - Slip-on

ISO 9001

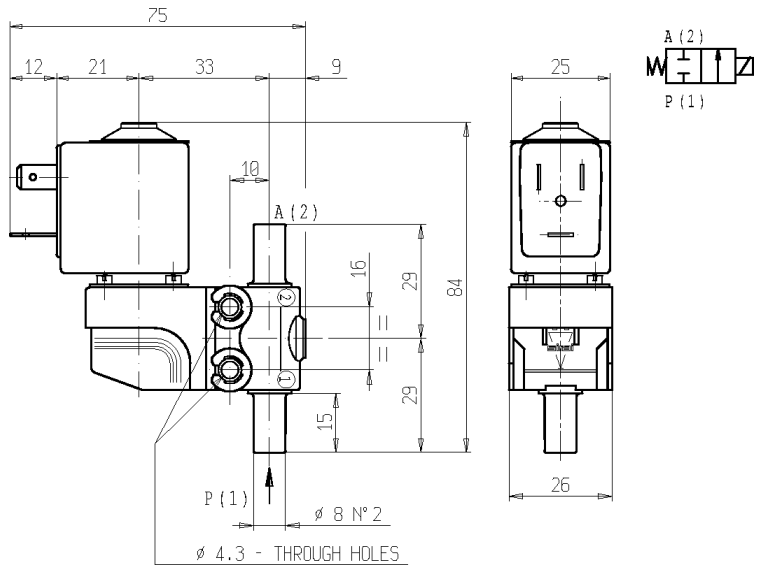



FEATURES - Direct acting, total separation between the actuator and medium which remains in contact only with the valve body and the lever-seal. Designed to shut off liquid and gazeous media compatible with valve materials. Possibility of disassembling for inspection. The parts subject to sliding friction are duly coated by PTFE (Polytetrafluorethylene) based self lubricating material.

MOUNTING - In any position, vertical with coil upwards preferred.

VALVE - Moulded body in PEI (Polyetherimide). Lever seal in elastomer as per table. Medium temperature from -10°C to +100°C. Viscosity max 5 E° (~37 cStokes or mm²/s). Opening time ~25ms. Closing time ~25ms.

COIL - Rated for continuous duty in AC (alternate current) or DC (direct current). Coil in class "F" (+155°C) wound by class "H" wires (+180°C) vacuum impregnated by polyester resin and encapsulated into glass fibre reinforced PBT (polybutylene-terephtalate).
Ambient temperature from -10°C to +60°C.
Standard voltages 24-110-220-230V/50-60Hz AC and 12-24V DC.
Voltage tolerance +10% -15% AC and +10% -5% DC.
Electric plug connection (DIN 46340) or suitable for 3 poles connectors.
Protection degree IP65 as per EN 60529 if the coil is duly fitted with its plug connector.

Port size	Orifice size (mm)	Max pressure (bar)				Kv (m^3/h)	Series and type		Power absorption			Seals	Notes	Weight (kg)
		Gases		Liquids			Valve	Coil	AC (VA)		DC (W)			
		AC	DC	AC	DC				Inrush	Holding				
Slip-on	2,7	10	5	10	5	0,23	D118D03	Z610A	16	10	6	EPDM	-	0,150
		5		5			D118S03					VMQ		
		10		10			D118V03					FPM		
	3,4	6	3	6	3	0,30	D118D03					EPDM		
		3		3			D118S03					VMQ		
		6		6			D118V03					FPM		

NOTES - Seal: EPDM = Ethylene-propylene elastomer VMQ = Silicone elastomer FPM = Fluoro-carbon elastomer
- Other voltages and frequencies on request .

0104/0111

SIRAI ELETTROMECCANICA S.r.l. Strada per Cernusco, 19 - 20060 BUSSERO (MI) – Italy
Tel. (+39) 0295038621 - 0295038712 - Fax (+39) 0295038895 - E-mail: sirai@tin.it - www.sirai.com

SPARE PARTS

Series D118

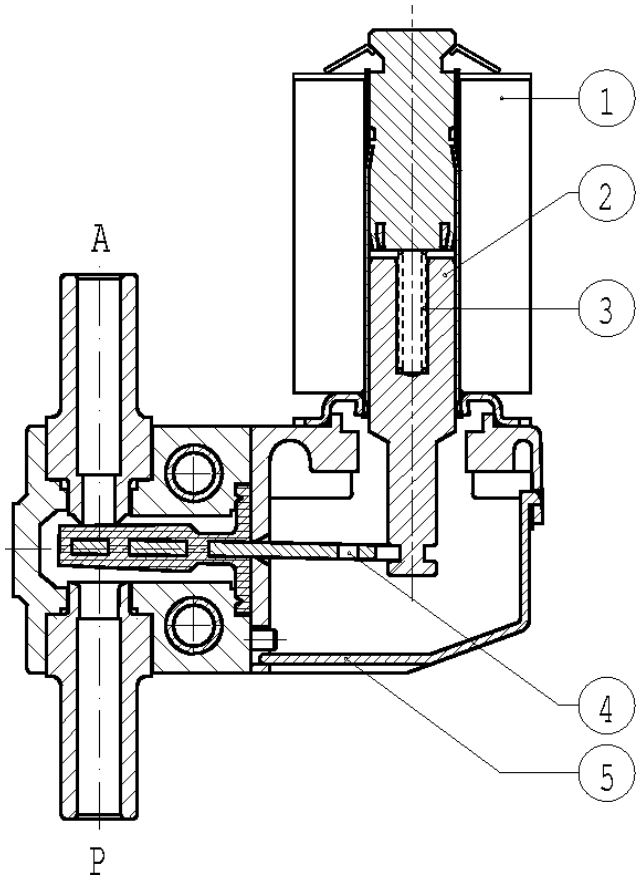

Kit description		Kit P.N.	Consisting of:
Core kit	D118-D-S-V-03	G3049641	Core pos. 2 Core return spring pos. 3
Lever-seal	D118-D03 D118-S03 D118-V03	2815201 2815202 2815203	Lever-seal pos. 4
Cover		2883901	Cover pos. 5
Coil Z610A			Coil pos. 1

NB – THE VALIDITY OF REPORTED DATA IS REFERRED TO THE DATE OF ISSUE. POSSIBLE UPDATING ARE AVAILABLE ON REQUEST

SIRAI ELETTROMECCANICA S.r.l. Strada per Cernusco, 19 - 20060 BUSSERO (MI) – Italy
Tel. (+39) 0295038621 - 0295038712 - Fax (+39) 0295038895 - E-mail: sirai@tin.it - www.sirai.com