

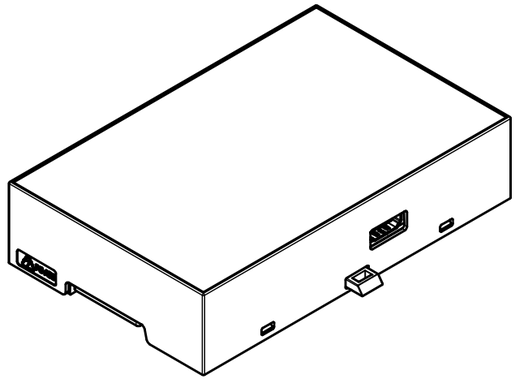

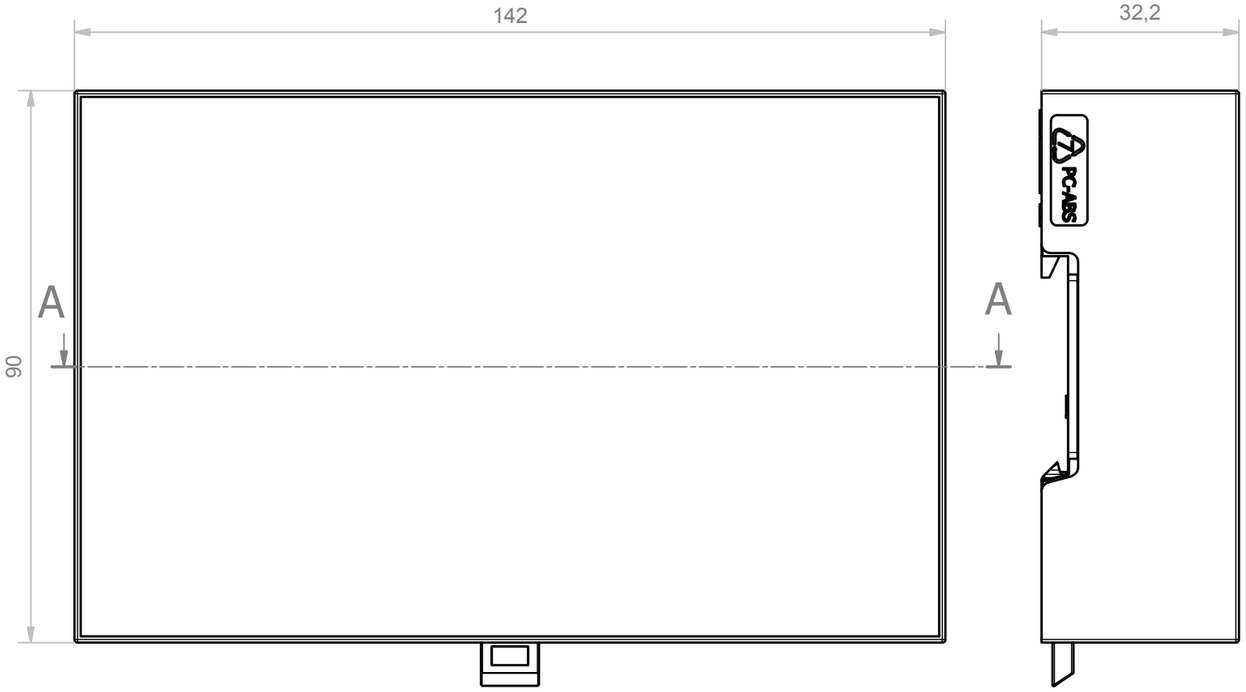

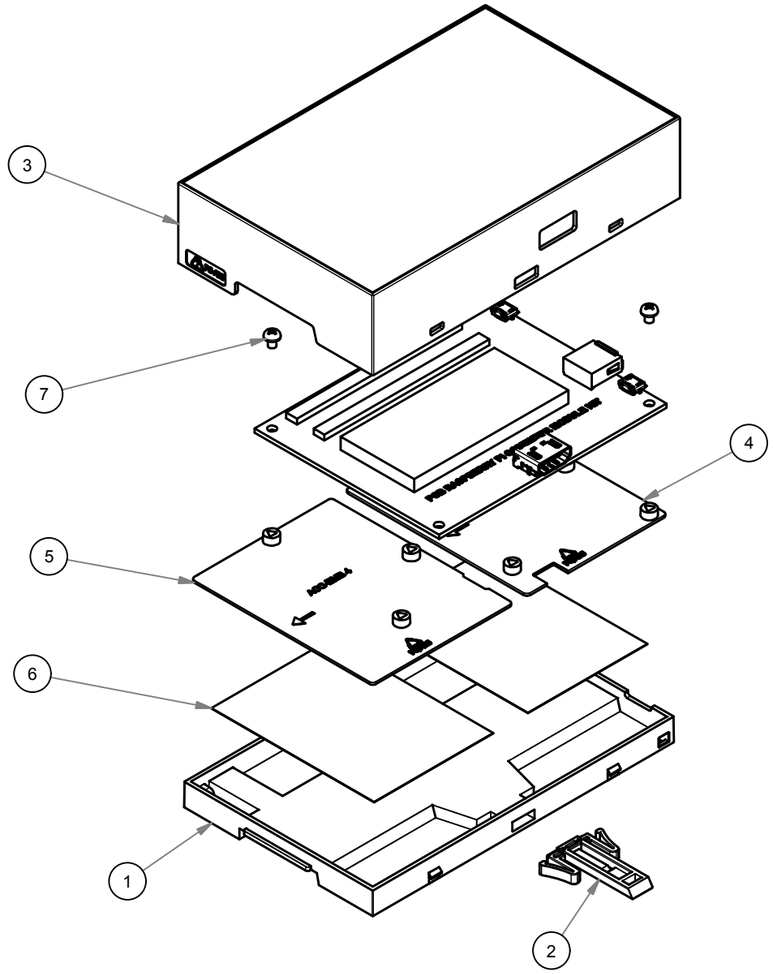

A-A (1 : 1)

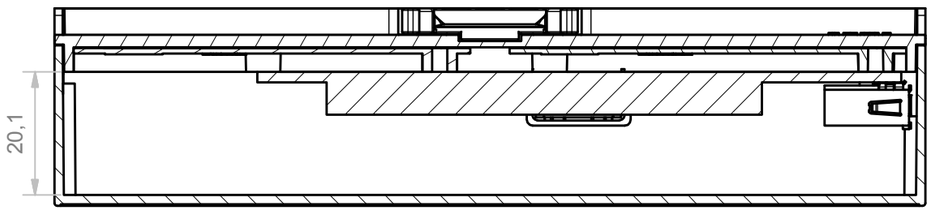

RIF.	Q.TY	DESCRIPTION	DRAWING
1	1	BASE 8M XT RASPBERRY COMPUTE MODULE FOR ACCESSORY BASE EMBEDDED	1.001.07814
2	1	MODULAR HOOK LONG	1.001.01900
3	1	BODY 8MC33-C XTS COMPACT RASPBERRY COMPUTE MODULE	1.001.05798
4	1	ACCESSORY FOR BASE EMBEDDED EMB3	2.050.00003
5	1	ACCESSORY FOR BASE EMBEDDED EMB4	2.050.00004
6	2	ADHESIVE FOR ACCESSORY BASE EMBEDDED	2.050.00005
7	2	SCREW 2.9 X 4.5 TC	8.100.00013

General Tolerance UNI EN 22768/1 Media (m)

from 0.5 to 3	from 3 to 6	from 6 to 30	from 30 to 120	from 120 to 400
± 0.1	± 0.1	± 0.2	± 0.3	± 0.5

Scale:	Sheet nr.:	Drawed:	Checked:	Date:
1 : 1	1 / 1	N.R.	F.F.	12/04/2018

5 4 3 2 1

Revision description

Dimension in mm

Material:

Weight: -

Volume: -

italtronic enclosures for electronics

Hitaltech A group of connecting technologies

Description:
KIT 8M XTS COMPACT RASPBERRY COMPUTE MODULE WITH ACCESSORY BASE EMBEDDED

Drawing nr. 1.001.07816

Rev. 00

RESERVED PROPERTY:The present drawing cannot be reproduced or comunicated to 3d parties, even partially, without the authorization of ITALTRONIC Srl. Italtronic reserves to protect its own rights according to the law.