EVIDGOM ®

Natural frequency : (1)
2,5 to 7 Hz





DESCRIPTION

The EVIDGOM® mount is formed from two thick conical membranes joined at their bases to create a highly elastic mounting.

There are two variations :
- all rubber EVIDGOM®;
- EVIDGOM® with bonded fixing;

OPERATION

The design of the EVIDGOM® mount gives the following basic characteristics:
- a very high axial elasticity;
- very low natural frequency (a few Hertz);
- progressive buffer against shocks or accidental overload.

Advantages
- As the load/deflection curve has a point of inflection, a suspension may be designed to have a sub-tangent greater than the static deflection.
- The elastomer used provides intrinsic damping with a corresponding ability to absorb energy which gives appreciable advantages over metallic springs.

Recommendations
- The selection of a low natural frequency (large deflection) must not be allowed to endanger the stability of the suspension (tall equipment).
- In certain cases (use under maximum load) the use of side stops is recommended.

1) the indicated natural frequency, are valid for the maxi loads of the ranges of use quoted in the paragraph : TECHNICAL CHARACTERISTICS.

DIMENSIONS CHARACTERISTICS

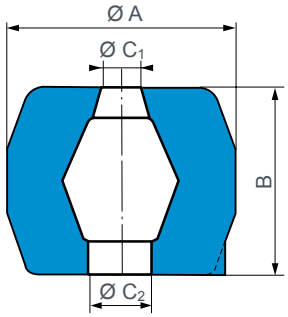

Shape 1

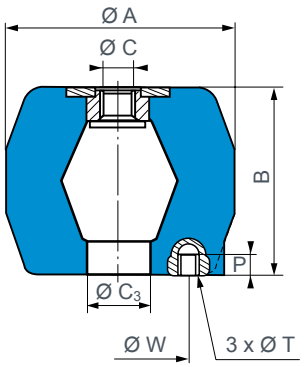

Shape 2

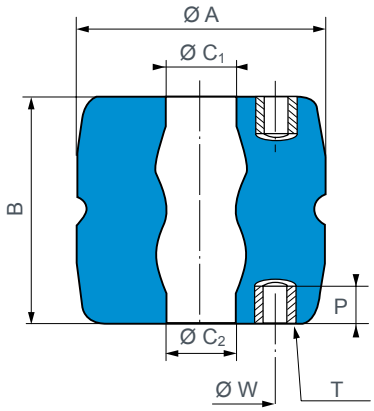

Shape 3

all rubber		without fixings		Ø A (mm)	B (mm)	C	Ø C1 (mm)	Ø C2 (mm)	Ø C3 (mm)	Ø W (mm)	T	P (mm)
Reference	Shape	Reference	Shape									
810002	1	-	-	34	25	-	8	8	-	-	-	-
810003	1	-	-	40	55	-	14	14	-	-	-	-
810005	1	-	-	50	70	-	14	14	-	-	-	-
-	-	**810780**	2	60	40	M10	-	25	25	40	M6	6
810006	1	**810766**	2	85	70	M16	20	30	30	60	M8	8
810008	1	**810768**	2	95	90	M16	20	30	30	60	M8	8
810009	1	**810769**	2	108	90	M16	20	30	34	70	M10	10
810012	1	-	-	120	110	-	20	30	-	-	-	-
810013	1	**810773**	2	140	120	M16	25	40	35	70	M10	10
810014	1	**810784**	2	125	140	M16	25	30	25	70	M10	10
-	1	**810774**	2	125	140	M16	25	30	25	70	4 x M12	12
810019	1	**810779**	2	140	90	M16	28	12	28	70	M10	10
810020	1	**810770**	2	140	56	M16	30	30	30	70	M10	10
810015	1	**810775**	2	155	150	M16	25	30	30	90	M14	14
810016	1	**810776**	2	188	180	M24	40	40	40	90	M14	14
-	-	**810733**	3	250	230	-	70	70	-	150	6 x M24	40
-	-	**810736**	3	350	290	-	85	85	-	196	6 x M24	40
-	-	**810735**	3	350	395	-	85	85	-	196	8 x M24	40

See current price list for availability of items

Lower fixing plate

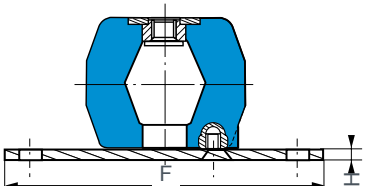

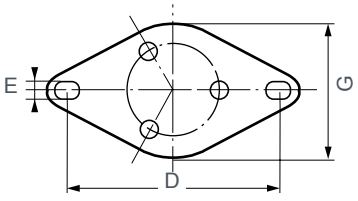

Shape A

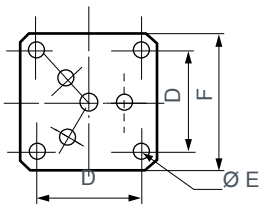

Shape B

Reference	Fixing pack reference (1)	Shape	D (mm)	E (mm)	F (mm)	G (mm)	H (mm)
810780	**337566**	A	98/102	8,2	117	65	5
810766	**337567**	A	124/128	10,2	158	110	5
810768	**337567**	A	124/128	10,2	158	110	5
810769	**337568**	A	178/182	10,2	214	150	6
810773	**337568**	A	178/182	10,2	214	150	6
810784	**337568**	A	178/182	10,2	214	150	6
810779	**337568**	A	178/182	10,2	214	150	6
810770	**337568**	A	178/182	10,2	214	150	6
810775	**337569**	B	170	10,5	200	-	8
810776	**337569**	B	170	10,5	200	-	8

(1) composition of the mounting pouches: 1 plate of inferior fixation + 3 FHC screws

OPERATING CHARACTERISTICS

Reference	Nominal static load (daN)	Deflecty ±15% (mm)	Ø A mm under nominal charge	Height B (mm)
810002	5-15	5	40	25
810003	10-40	11	50	55
810005	20-80	14	63	70
810780	15-60	10	80	40
810766	25-100	15	105	70
810768	35-150	18	124	90
810769	100-400	20	136	90
810012	100-390	23	134	110
810773	150-600	24	175	120

Reference	Nominal static load (daN)	Deflecty ±15% (mm)	Ø A mm under nominal charge	Height B (mm)
810784	00-800	26	170	140
810779	200-800	16	175	90
810770	200-800	10	166	56
810775	325-1300	30	175	150
810776	500-2000	35	240	180
810733-60	1250-5000	50	345	230
810733-75	2000-8000	50	345	230
810736-60	2250-9000	60	500	290
810736-75	3500-14000	60	500	290

See current price list for availability of items.

LOAD/DEFLECTION CURVES IN AXIAL COMPRESSION

