optris
infrared measurements

Operator's Manual

optris® CSmicro

LT/ LTH/ LTHS/ 2M/ 3M

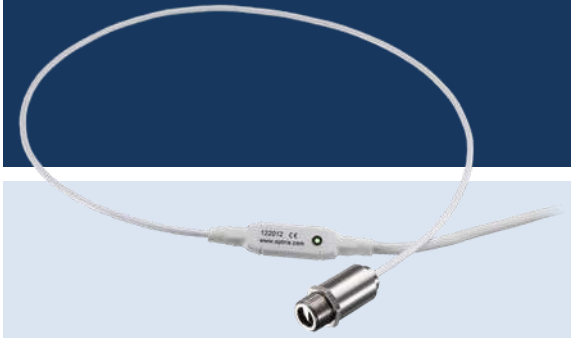

Infrared-thermometer

Optris GmbH
Ferdinand-Buisson-Str. 14
13127 Berlin
Germany

Tel.: +49 30 500 197-0
Fax: +49 30 500 197-10

E-mail: info@optris.global
Internet: www.optris.global

optris
infrared measurements

Table of Contents

Table of Contents 3

1 General Information 7

1.1 Description 7

1.2 Warranty 8

1.3 Scope of Supply 8

1.4 Maintenance 9

1.5 Model Overview 10

1.6 Factory Default Settings 11

2 Technical Data 15

2.1 General Specifications 15

2.2 Electrical Specifications 17

2.3 Pin Configuration 19

2.4 Measurement Specifications 20

2.5 Optical Charts 23

2.6 CF Lens and Protective Window 33

3 LED Functions 35

3.1 Automatic Aiming Support 35

3.2 Self Diagnostic 36

3.3 Temperature Code Indication 37

4 Mechanical Installation 38

4.1 Mounting Accessories [LT/ 2M/ 3M] 39

4.2 Mounting Accessories [LT15HS] 40

4.3 Air Purge Collars [LT/ 2M/ 3M] 41

4.4 Air Purge Collar [LT15HS] 42

4.5 Further Accessories 43

5 Electrical Installation 46

5.1 Analog Mode 46

5.2 Maximum Loop Impedance [CSMA models] 49

5.3 Digital Mode 50

5.4 Alarm Output 52

6 IRmobile app 53

7 Software CompactConnect 55

7.1 Installation 55

7.2 Communication Settings 57

8 Basics of Infrared Thermometry 58

9 Emissivity 59

9.1 Definition 59

9.2 Determination of unknown Emissivity 59

9.3 Characteristic Emissivity 60

Appendix A – Emissivity Table Metals 61

Appendix B – Emissivity Table Non Metals 63

Appendix C – Smart Averaging 64

Appendix D – Direct Connection to an RS232 Interface 65

Appendix E – Declarations of Conformity 66

1 General Information

1.1 Description

Thank you for choosing the **optris® CSmicro** infrared thermometer.
The sensors of the optris CSmicro series are noncontact infrared thermometers.
They calculate the surface temperature based on the emitted infrared energy of objects **[►8 Basics of Infrared Thermometry]**.
The sensor housing of the optris CSmicro is made of stainless steel (IP65/ NEMA-4 rating) – the sensor electronics is integrated inside the connection cable.

The CSmicro sensing head is a sensitive optical system. Please use only the thread for mechanical installation.

- Avoid abrupt changes of the ambient temperature.
- Avoid mechanical violence on the head – this may destroy the system (expiry of warranty).
- If you have any problems or questions, please contact our service department.

Read the manual carefully before the initial start-up. The producer reserves the right to change the herein described specifications in case of technical advance of the product.

► All accessories can be ordered according to the referred part numbers in brackets [ ].

1.2 Warranty

Each single product passes through a quality process. Nevertheless, if failures occur please contact the customer service at once. The warranty period covers 24 months starting on the delivery date. After the warranty is expired the manufacturer guarantees additional 6 months warranty for all repaired or substituted product components. Warranty does not apply to damages, which result from misuse or neglect. The warranty also expires if you open the product. The manufacturer is not liable for consequential damage or in case of a non-intended use of the product.
If a failure occurs during the warranty period the product will be replaced, calibrated or repaired without further charges. The freight costs will be paid by the sender. The manufacturer reserves the right to exchange components of the product instead of repairing it. If the failure results from misuse or neglect the user has to pay for the repair. In that case you may ask for a cost estimate beforehand.

1.3 Scope of Supply

- CSmicro incl. connection cable
- Mounting nut
- Isolated mounting bracket (only included for LTH devices)
- Operators manual

1.4 Maintenance

Lens cleaning: Blow off loose particles using clean compressed air. The lens surface can be cleaned with a soft, humid tissue (moistened with water) or a lens cleaner (e.g. Purosol or B+W Lens Cleaner).



Never use cleaning compounds which contain solvents (neither for the lens nor for the housing).

1.5 Model Overview

The sensors of the CSmicro series (CSMV and CSMA) are available in the following versions:

Series	Model	Measurement range	Spectral response	Output	Optics	Specialty
LT	LT02	-50 to 1030 °C	8-14 µm	0/5-10 V (CSMV) or 4-20 mA (CSMA)	2:1	
	LT15				15:1	
	LT15H					T_{amb} max. 180 °C
	LT22H				22:1	
	LT HS	-20 to 150 °C			15:1	0,025 K resolution
2M	2ML	250 to 800 °C	1,6 µm		40:1	
	2MH	385 to 1600 °C			75:1	
3M	3ML	50 to 350 °C	2,3 µm		22:1	
	3MH	100 to 600 °C			33:1	

1.6 Factory Default Settings

The units have the following presetting at time of delivery:

CSmicro	**LT02**	**LT15**	**LT15HS**	**LT15H**	**LT22H**
Temperature range:	0...350 °C		-20…150 °C	0...500 °C	
Output:	0...3,5 V or 4…20 mA		0…5 V or 4…20 mA		
Emissivity:	0,950				
Transmission:	1,000				
Average time:	10 ms				
Smart Averaging:	active				
Smart Averaging hysteresis:	2 °C				
Ambient temperature source:	internal (head)				
Status-LED function:	Self diagnostic				
Input (IN/ OUT/ green):	Inactive (mV version) or Communication input (mA version)				
Output (OUT/ yellow):	mV output (mV version) or Communication output (mA version)				
Vcc adjust:	inactive				
Signal processing:	Hold mode: off				
Calibration:	Gain 1,000/ Offset 0,0				
Failsafe:	inactive				

CSmicro	2ML	2MH	3ML	3MH
Temperature range:	250...800 °C	385...1600 °C	50…350 °C	100...600 °C
Output:	0…10 V or 4...20 mA			
Emissivity:	0,950			
Transmission:	1,000			
Average time:	10 ms			
Smart Averaging:	active			
Smart Averaging hysteresis:	2 °C			
Ambient temperature source:	internal (head)			
Status-LED function:	Self diagnostic			
Input (IN/ OUT/ green):	Inactive (mV version) or Communication input (mA version)			
Output (OUT/ yellow):	mV output (mV version) or Communication output (mA version)			
Vcc adjust:	inactive			
Signal processing:	Hold mode: off			
Calibration:	Gain 1,000/ Offset 0,0			
Failsafe:	inactive			

Smart Averaging means a dynamic average adaptation at high signal edges.
[Activation via software only]. ►**Appendix C – Smart Averaging**

For a usage of the CSmicro LT (mV version) for online maintenance applications (in electrical cabinets e.g.) the following recommend settings are already included in the factory default setting (but not active):

OUT	At **3-state output** the following settings are default:	
	Pre-alarm difference:	2 °C
	No alarm level:	8 V
	Pre-alarm level:	5 V
	Alarm level:	0 V
	Service voltage:	10 V
IN/ OUT:	At **Alarm output (open collector)** the following settings are default:	
	Mode:	normally closed
	Temp code output:	activated (for values above alarm level)
	Range settings:	0 °C = 0 %/ 100 °C = 100 %
Vcc adjust:	If **activated** the following settings are default:	
	Output voltage range:	0 - 10 V
	Difference mode:	activated

Vcc adjust:

Alarm level	Alarm value (IN/ OUT pin)	Vcc
1	40 °C	11 V
2	45 °C	12 V
3	50 °C	13 V
4	55 °C	14 V
5	60 °C	15 V
6	65 °C	16 V
7	70 °C	17 V
8	75 °C	18 V
9	80 °C	19 V
10	85 °C	20 V

2 Technical Data

2.1 General Specifications

Environmental rating	IP65 (NEMA-4)
Ambient temperature	Sensing head: see: Measurement Specifications Electronics (inside cable): -20...80 °C [CSMV] -20...75 °C [1)] [CSMA]
Storage temperature	-40…85 °C
Relative humidity	10...95 %, non condensing
Material	Stainless steel
Dimensions	28 mm x 14 mm (head) [LT/ 2M/ 3M] 32 mm x 14 mm (head) [3M CF1] 55 mm x 29,5 mm (head incl. massive housing) [LT15HS] 35 mm x 12 mm (electronics)
Weight	42 g [LT/ 2M/ 3M] 200 g [LT15HS]
Cable length	head – electronics: 0,5 m (standard), 3 m, 6 m [LT/ 2M/ 3M [2)]] after electronics: 0,5 m (standard), 3 m, [LT/ 2M/ 3M] head – electronics: 0,5 m [LT15HS] after electronics: 0,5 m (standard), 3 m, 6 m [LT15HS]
Cable diameter	2,8 mm (head – electronics) 4,3 mm (electronics – end of cable)
Vibration	IEC 60068-2-6 / -64

Shock	IEC 60068-2-27 (25G and 50G
Pressure resistance (head)	8 bar
Software	optional

[1] for Vcc (supply voltage) 5-12 VDC/ at Vcc > 12 VDC the max. ambient temperature of the electronics is 65 °C
[2] 6 m cable length not available for 3M version

2.2 Electrical Specifications

Used Pin		Function	CSMV	CSMA
OUT	**IN/ OUT**			
x		Analog	0-5 V [1] or 0-10 V [2]/ scalable	4-20 mA/ scalable (current loop between Power and GND pin)
x		Alarm	output voltage adjustable; N/O or N/C	output current adjustable; N/O or N/C (current loop between Power and GND pin)
x		Alarm	3-state alarm output (three voltage level for no alarm, pre-alarm, alarm)	-
	x	Alarm	programmable open collector output (NPN type) [0-30 V DC/ 50 mA] [4]	programmable open collector (NPN type) [0-30 V DC/ 500 mA]
	x	Temp. Code	Temp. Code Output (open collector (NPN type)) [0-30 V DC/ 50 mA] [4]	Temp. Code Output (open collector (NPN type)) [0-30 V DC/ 500 mA]
	x	Input	programmable functions: • external emissivity adjustment • ambient temperature compensation • triggered signal output and peak hold function [5] • Reset of hold function [6]	programmable functions: • triggered signal output and peak hold function[5] • Reset of hold function [7]
x	x	Serial digital [3]	uni- (burst mode) or bidirectional	uni- (burst mode) or bidirectional
Output impedances			min. 10 kΩ load impedance	max. 1 kΩ loop impedance

Current draw	9 mA	4-20 mA
Power supply	5...30 VDC	5...30 VDC
Status-LED	green LED with programmable functions: • alarm indication (threshold independent from alarm outputs) • automatic aiming support • self diagnostics • temperature code indication	
Vcc adjust mode	10 adjustable emissivity and alarm values by variation of supply voltage/ Service mode for analog output **[LT only]**	

[1] 0...4,6 V at supply voltage 5 VDC; also valid for alarm output
[2] only at supply voltage ≥ 11 V
[3] inverted RS232, TTL, 9,6 kBaud
[4] 500 mA if the mV output is not used
[5] High level: > 0,8 V/ Low level: < 0,8 V
[6] Reset of peak or valley hold by High level at IN/ OUT pin (Low: open or GND / High: >2,4 V...11 V)
[7] Reset of peak or valley hold by Low level at IN/ OUT pin (Low: GND / High: open or >1 V...11 V)

2.3 Pin Configuration



white	Power	Power supply
yellow	OUT	Analog output/ TxD/ Alarm output
green	IN/ OUT	Analog input/ RxD/ Open collector output
brown	GND	Ground (⊥)
black	Shield	Shield

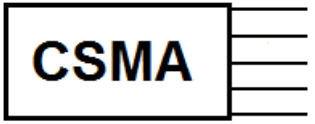

white	Power	Current loop (+)/ Alarm output
yellow	OUT	TxD
green	IN/ OUT	Trigger input/ RxD/ Open collector output
brown	GND	Current loop (-)/ Ground (⊥)
black	Shield	Shield

You will find a detailed description of the different sensor connections in chapter ►**5 Electrical Installation**.

2.4 Measurement Specifications

	LT02/ LT15	LT15H/LT22H	LT15HS
Temperature range IR (scalable via software)	-50...1030 °C		-20...150 °C
Ambient temperature (sensing head)	-20...120 °C	-20...180 °C	--20...75 °C
Spectral range	8...14 µm		
Optical resolution	2:1/ 15:1	15:1/ 22:1	15:1
CF-lens (optional)	2,5 mm@ 23 mm/ 0,8 mm@ 10 mm	0,8 mm@ 10 mm/ 0,6 mm@ 10 mm	0,8 mm@ 10 mm
Accuracy [1),2)]	±1,0 °C or ±1,0 %		
Repeatability [1),2)]	±0,5 °C or ±0,5 %		±0,3 °C or ±0,3 %
Temperature coefficient [3)]	±0,05 K/ K or ±0,05 %/ K (whichever is greater)		
NETD	50 mK [4)]		25 mK [5)]
Response time	14 ms (90 % signal)	150 ms (90 % signal)	
Warm-up time	10 min		
Emissivity/ Gain	0,100...1,100 (adjustable via software)		
Transmissivity	0,100...1,100 (adjustable via software)		
Interface (optional)	USB (programming interface)		
Signal processing	Average, Peak hold, Valley hold (adjustable via software)		

[1)] at ambient temperature 23±5 °C, whichever is greater; Epsilon = 1; Response time 1 s
[2)] at object temperatures > 23 °C
[3)] for ambient temperatures <18 °C and >28 °C
[4)] T_{Object} = 200 °C, response time 200 ms
[5)] T_{Object} = 20 °C, response time 150 ms

	2ML	2MH
Temperature range IR (scalable via software)	250...800 °C	385...1600 °C
Ambient temperature (sensing head)	-20...125 °C	
Spectral range	1,6 µm	
Optical resolution	40:1	75:1
CF-lens (optional)	0,4 mm@ 11 mm	0,2 mm@ 11 mm
Accuracy [1),2)]	±(0,3 % of reading + 2 °C)	
Repeatability [1),2)]	±(0,1 % of reading + 1 °C)	
Temperature coefficient [3)]	±0,05 K/ K or ±0,05 %/ K (whichever is greater)	
NETD	40 mK [4)]	50 mK [5)]
Response time (90 % signal)	8 ms (mV version), 20 ms (mA version)	
Warm-up time	-	
Emissivity/ Gain	0,100...1,100 (adjustable via software)	
Transmissivity	0,100...1,100 (adjustable via software)	
Interface (optional)	USB (programming interface)	
Signal processing	Average, Peak hold, Valley hold (adjustable via software)	

[1)] at ambient temperature 23±5 °C; Epsilon = 1; Response time = 1 s
[2)] at object temperatures > 300 °C
[3)] for ambient temperatures <18 °C and >28 °C
[4)] T_{Object} = 500 °C, response time 8 ms
[5)] T_{Object} = 800 °C, response time 8 ms

	3ML	3MH
Temperature range IR (scalable via software) [1]	50...350 °C	100...600 °C
Ambient temperature (sensing head)	-20...85 °C	
Spectral range	2,3 µm	
Optical resolution	22:1	33:1
CF optics (built-in)	5,0 mm@ 110 mm	3,4 mm@ 110 mm
CF1 optics (built-in)	1,5 mm@ 30 mm	1,0 mm@ 30 mm
Accuracy [2]	±(0,3 % of reading + 2 °C)	
Repeatability [2]	±(0,1 % of reading + 1 °C)	
Temperature coefficient [3]	±0,05 K/ K or ±0,05 %/ K (whichever is greater)	
NETD	30 mK [4]	50 mK [5]
Response time (90 % signal)	8 ms (mV version), 20 ms (mA version)	
Warm-up time	-	
Emissivity/ Gain	0,100...1,100 (adjustable via software)	
Transmissivity	0,100...1,100 (adjustable via software)	
Interface (optional)	USB (programming interface)	
Signal processing	Average, Peak hold, Valley hold (adjustable via software)	

[1] $T_{Object} > T_{Head}+25$ °C
[2] at ambient temperature 23±5 °C, whichever is greater; Epsilon = 1; Response time 1 s
[3] for ambient temperatures <18 °C and >28 °C
[4] T_{Object} = 150 °C, response time 200 ms
[5] T_{Object} = 300 °C, response time 200 ms

2.5 Optical Charts

The following optical charts show the diameter of the measuring spot in dependence on the distance between measuring object and sensing head. The spot size refers to 90 % of the radiation energy.
The distance is always measured from the front edge of the sensor housing/ CF-lens holder/ air purge.

As an alternative to the optical diagrams, the spot size calculator can also be used on the Optris website or via the Optris calculator app. The app can be downloaded for free from the Google Play store (see QR code).



D = Distance from front of the sensing head to the object

S = Spot size

The D:S ratio is valid for the focus point.

The size of the measuring object and the optical resolution of the infrared thermometer determine the maximum distance between sensing head and measuring object.
In order to prevent measuring errors the object should fill out the field of view of the optics completely.
Consequently, the spot should at all times have at least **the same size** like the object or should be **smaller than** that.

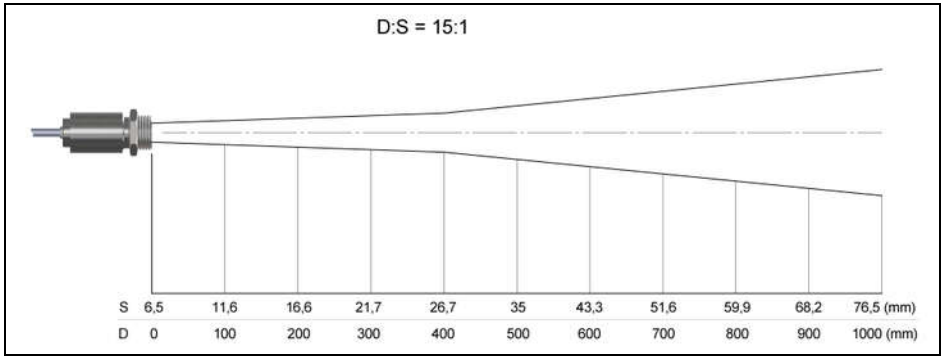

LT15/ LT15H/ LT15HS **D:S = 15:1**

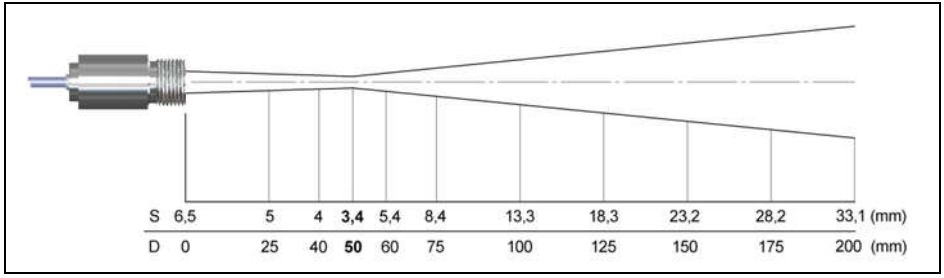

LT15CF/ LT15HCF **D:S = 15:1/ D:S Far field = 5:1**

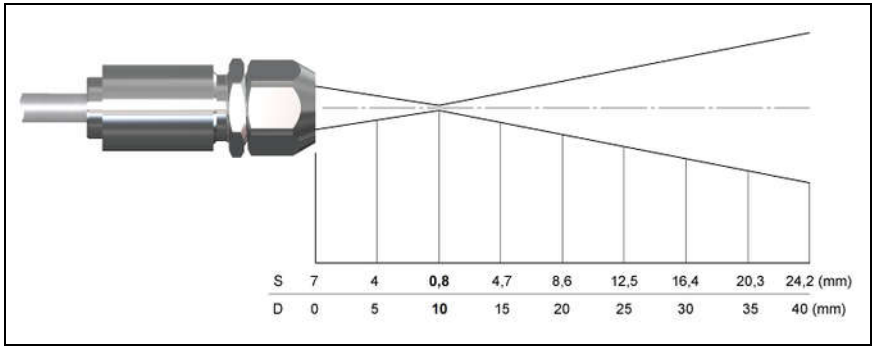

LT15/ LT15H/ LT15HS with CF lens (0,8 mm@ 10 mm)/ D:S Far field = 1,4:1

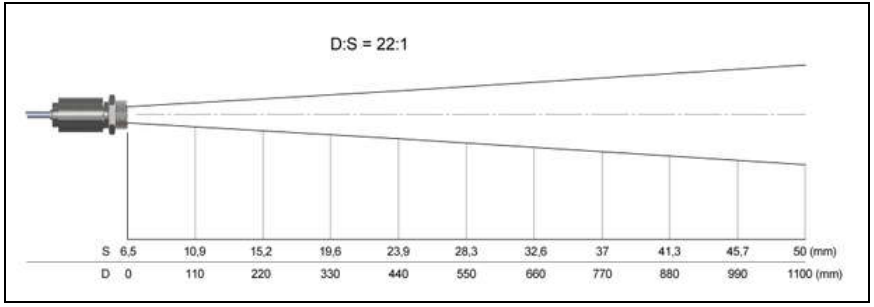

LT22H D:S = 22:1

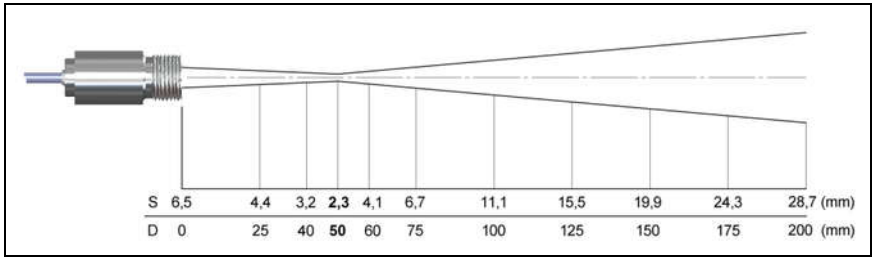

LT22CF/ LT22HCF D:S = 22:1/ D:S Far field = 6:1

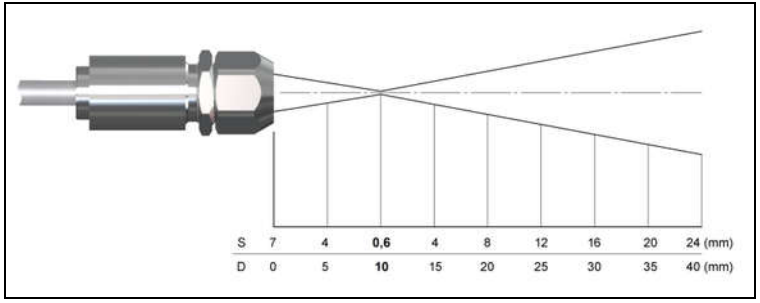

LT22H with CF lens (0,6 mm@ 10 mm)/ D:S Far field = 1,5:1

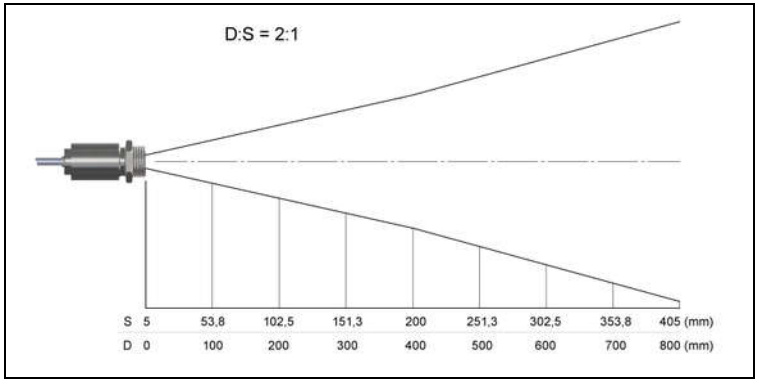

LT02 D:S = 2:1

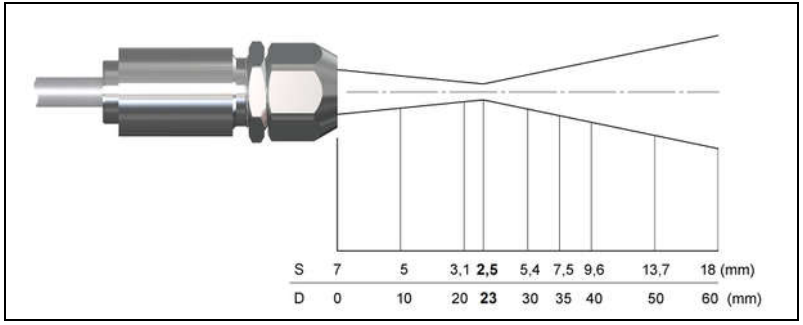

LT02 with CF lens (2,5 mm@ 23 mm)/ D:S Far field = 2,5:1

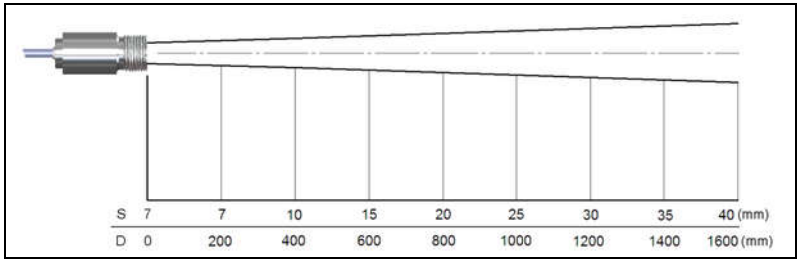

2ML_SF **D:S = 40:1**

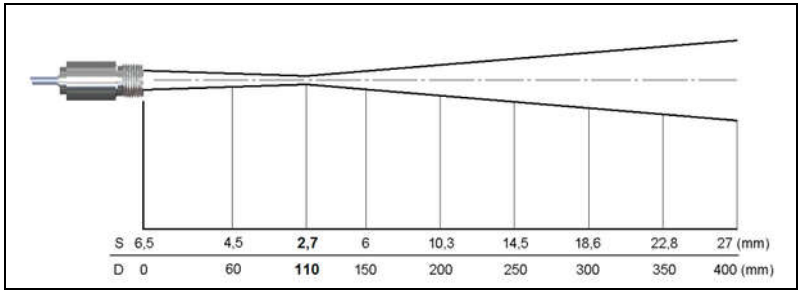

2ML_CF **D:S = 40:1/ D:S Far field = 12:1**

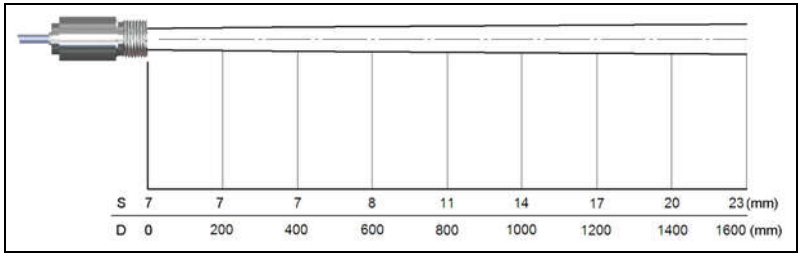

2MH SF **D:S = 75:1**

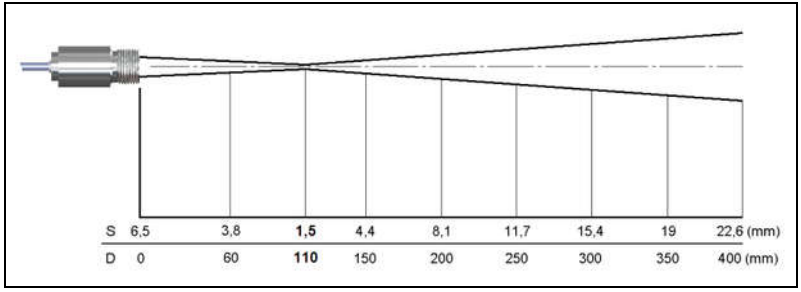

2MH CF **D:S = 75:1/ D:S Far field = 14:1**

If the CF lens (ACCTCFHT or ACCTCFHTE) is used in connection with 2M units (SF or CF optics) the focus is shifted to a distance of 11 mm.

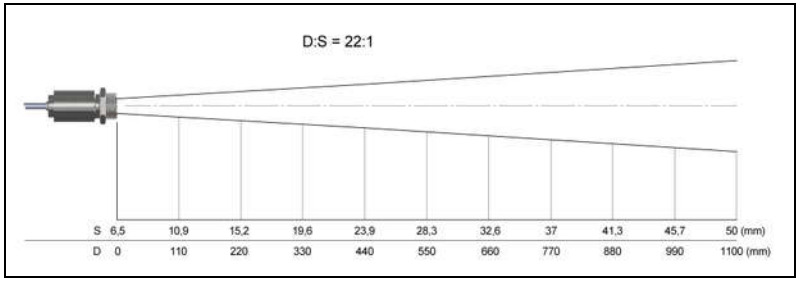

3ML_SF D:S = 22:1

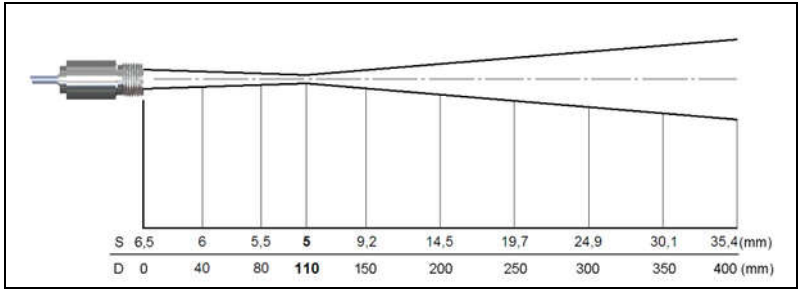

3ML_CF D:S = 22:1/ D:S Far field = 9:1

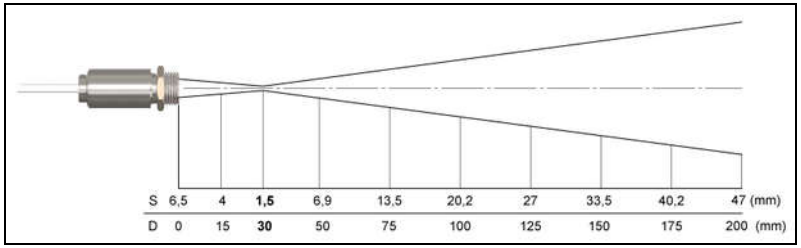

3ML CF1 **D:S = 22:1/ D:S Far field = 3,5:1**

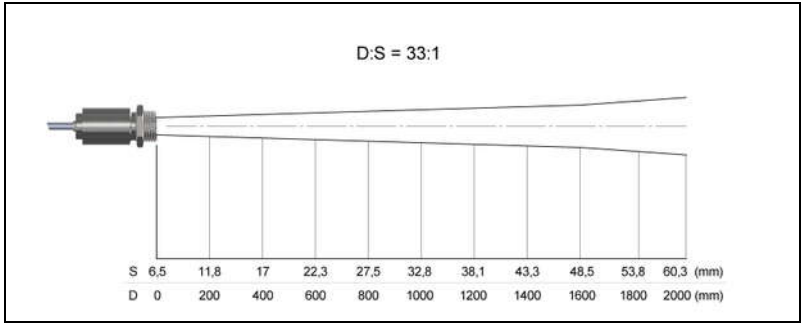

3MH SF **D:S = 33:1**

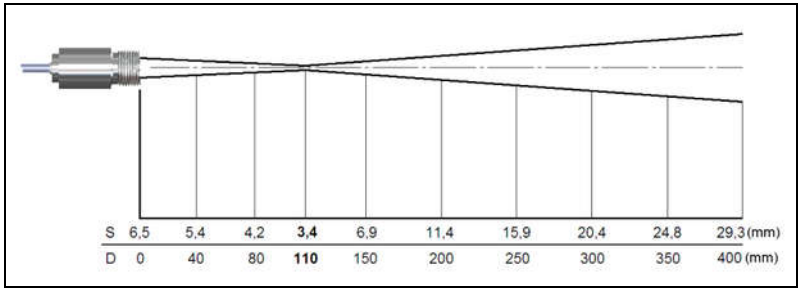

3MH CF D:S = 33:1/ D:S Far field = 11:1

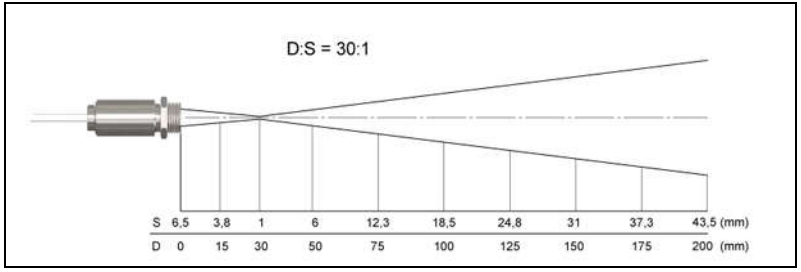

3MH CF1 D:S = 30:1/ D:S Far field = 4:1

2.6 CF Lens and Protective Window

The optional CF lens allows the measurement of very small objects. The minimum spot size depends on the used sensing head. The distance is always measured from the front edge of the CF lens holder or laminar air purge collar. The installation on the sensing head will be done by turning the CF lens until end stop. To combine it with the LT15HS model please use the version with external thread M12x1.

Typical Transmission values* if the CF lens is used (average values):

LT	**0,78**
2M	**0,87**
3M	**0,92**

***Deviations possible**

Versions Overview:

ACCTCF	CF lens for installation on sensing head [LT]
ACCTCFHT	CF lens for installation on sensing head [2M, 3M]
ACCTCFE	CF lens with external thread for installation in massive housing [LT]
ACCTCFHTE	CF lens with external thread for installation in massive housing [2M, 3M]

For protection of the sensing head optics a protective window is available. The mechanical dimensions are equal to the CF lens. It is available in the following versions:

ACCTPW	Protective window for installation on sensing head [LT]
ACCTPWHT	Protective window for installation on sensing head [2M, 3M]
ACCTPWE	Protective window with external thread for installation in massive housing [LT]
ACCTPWHTE	Protective window with external thread for installation in massive housing [2M, 3M]

Typical Transmission values* if the protective window is used (average values):

LT	**0,83**
2M/ 3M	**0,93**

***Deviations possible**

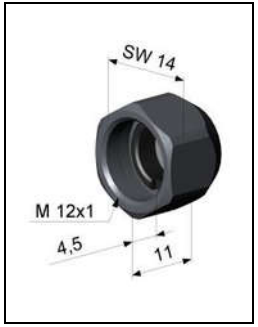

CF lens:
ACCTCF/ ACCTCFHT
Protective window:
ACCTPW/ ACCTPWHT

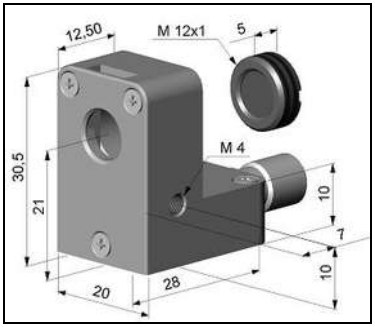

Laminar air purge with integrated CF lens:
ACCTAPLCF/ ACCTAPLCFHT

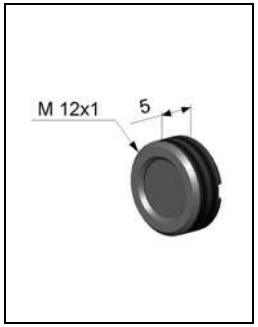

CF lens with external thread:
ACCTCFE/ ACCTCFHTE
Protective window with external thread:
ACCTPWE/ ACCTPWHTE

To change the transmission value the IR app connector (including software) is necessary.

3 LED Functions

The green LED can be programmed for the following functions. For the programming the **USB adapter cable incl. software (option)** is necessary. The factory default setting for the LED is self diagnostic.

LED Alarm	LED lights up if the object temperature exceeds or deceeds an alarm threshold
Automatic aiming support	Sighting feature for an accurate aiming of the CS to hot or cold objects
Self-diagnostic	LED is indicating different states of the sensor
Temperature Code indication	Indication of the object temperature via the LED
Off	LED deactivated

3.1 Automatic Aiming Support

The automatic aiming support helps to adjust the unit to an object which has a temperature different to the background. If this function is activated via software the sensor is looking for the highest object temperature; means the threshold value for activating the LED will be automatically tuned.
This works also if the sensor is aimed at a new object (with probably colder temperature). After expiration of a certain reset time (default setting: 10 s) the sensor will adjust the threshold level for activation of the LED new.

3.2 Self Diagnostic

With this function the current status of the sensor will be indicated by different flash modes of the LED.

If activated, the LED will show one out of five possible states of the sensor:

Status	LED mode	
Normal	intermittent off	- - - -
Sensor overheated	fast flash	- - - - - - - - - - - - -
Out of measuring range	double flash	-- -- -- -- -- -- --
Not stable	intermittent on	▬▬ ▬▬ ▬▬ ▬▬
Alarm fault	always on	▬▬▬▬▬▬▬▬▬▬▬▬

At a supply voltage (Vcc) ≥ 12 V it takes about 5 minutes until the sensor works in a stable mode. Therefore, after switching on the unit, the LED will show a not stable state for up to 5 minutes.

Sensor overheated: The internal temperature probes have detected an invalid high internal temperature of the CSmicro.

Out of measuring range: The object temperature is out of measuring range.

Not stable: The internal temperature probes have detected an unequally internal temperature of the CSmicro.

Alarm fault: Current through the switching transistor of the open-collector output is too high.

3.3 Temperature Code Indication

With this function the current measured object temperature will be indicated as percentage value by long and short flashing of the LED.
At a range setting of 0-100 °C → 0-100 % the LED flashing indicates the temperature in °C.

Long flashing → first digit:	**x**x
Short flashing → second digit:	x**x**
10-times long flashing → first digit=0:	**0**x
10-times short flashing → second digit=0:	x**0**

Examples

87 °C	8-times long flashing indicates	**8**7
and afterwards	7-times short flashing indicates	8**7**
31 °C	3-times long flashing indicates	**3**1
and afterwards	1-time short flashing indicates	3**1**
8 °C	10-times long flashing indicates	**0**8
and afterwards	8-times short flashing indicates	0**8**
20 °C	2-times long flashing indicates	**2**0
and afterwards	10-times short flashing indicates	2**0**

4 Mechanical Installation

The CSmicro is equipped with a metric M12x1 thread and can be installed either directly via the sensor thread or with the help of the hex nut (standard) to the mounting bracket available. The CSmicro LT15HS will be delivered with the massive housing and can be installed via the M18x1-thread.

The sensors CSmicro are sensitive optical systems. Please use only the thread for mechanical installation. Avoid mechanical violence on the head – this may destroy the system (expiry of warranty).

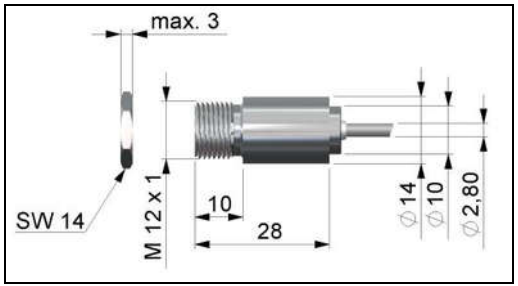

Sensing head [LT/ 2M/ 3M] [1)]

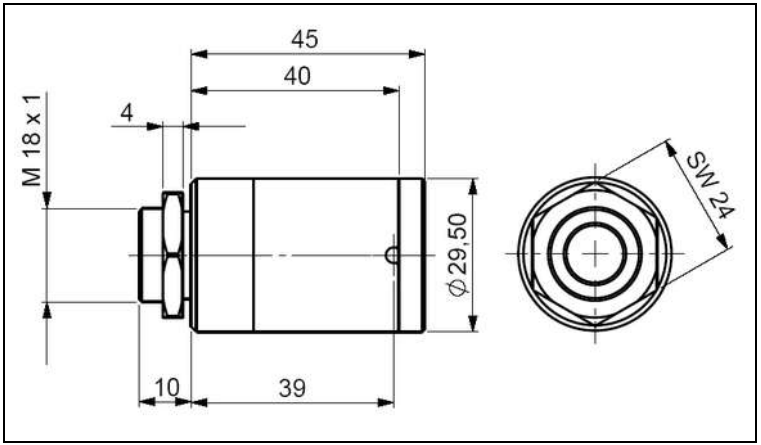

Sensing head [LTHS15]

[1)] On the 3MxCF1 model the total length of the sensing head is 32 mm instead of 28 mm.

4.1 Mounting Accessories [LT/ 2M/ 3M]

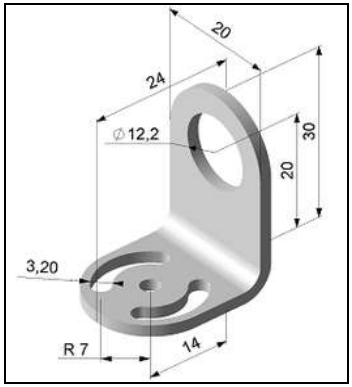

Mounting bracket, adjustable in one axis [ACCTFB]

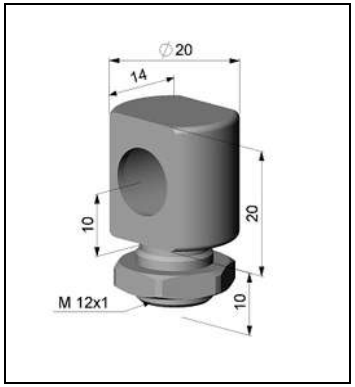

Mounting bolt with M12x1 thread, adjustable in one axis [ACCTMB]

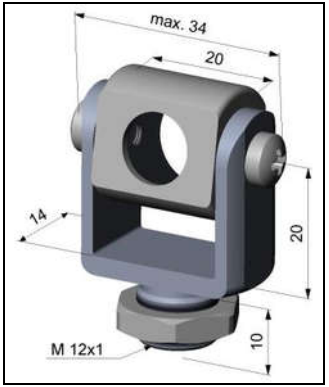

Mounting fork with M12x1 thread, adjustable in 2 axes [ACCTMG]



Mounting bracket, adjustable in two axes [ACCTAB]

The **Mounting fork** can be combined with the **Mounting bracket [ACCTFB]** using the M12x1 thread.

4.2 Mounting Accessories [LT15HS]

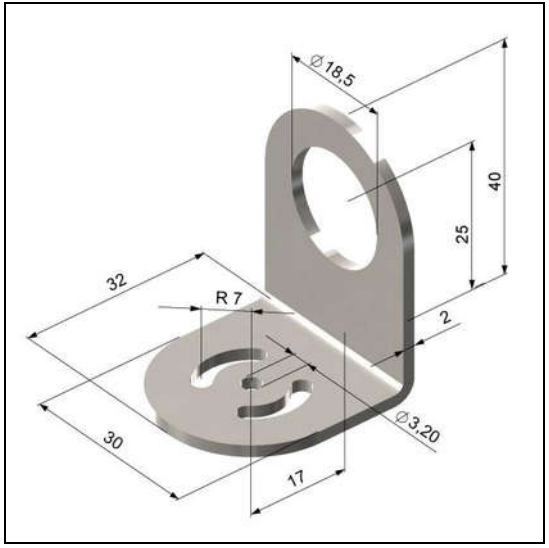

Mounting bracket, adjustable in one axis for LT15HS [ACCTFBMH]

4.3 Air Purge Collars [LT/ 2M/ 3M]

The lens must be kept clean at all times from dust, smoke, fumes and other contaminants in order to avoid reading errors. These effects can be reduced by using an air purge collar. Make sure to use oil-free, technically clean air only.

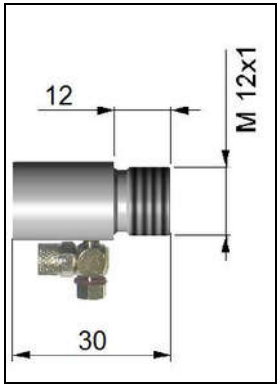

Standard air purge collar; fits to the mounting bracket; hose connection: 3x5 mm [ACCSAP]/ for heads with a D:S ratio ≥ 10:1

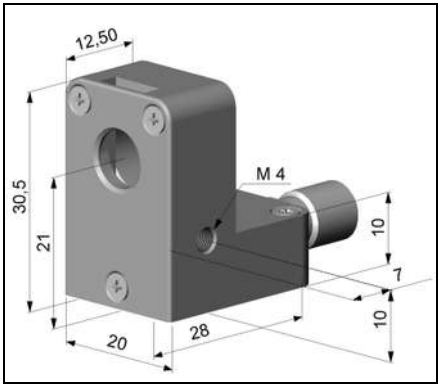

Laminar air purge collar – the sideward air outlet prevents a cooling down of the object in short distances; hose connection: 3x5 mm [ACCTAPL]



A combination of the **Laminar air purge collar** with the bottom section of the **Mounting fork** allows an adjustment in two axes. [**ACCTAPL+ACCTMG**]

The needed amount of air (approx. 2...10 l/ min.) depends on the application and the installation conditions on-site.

4.4 Air Purge Collar [LT15HS]

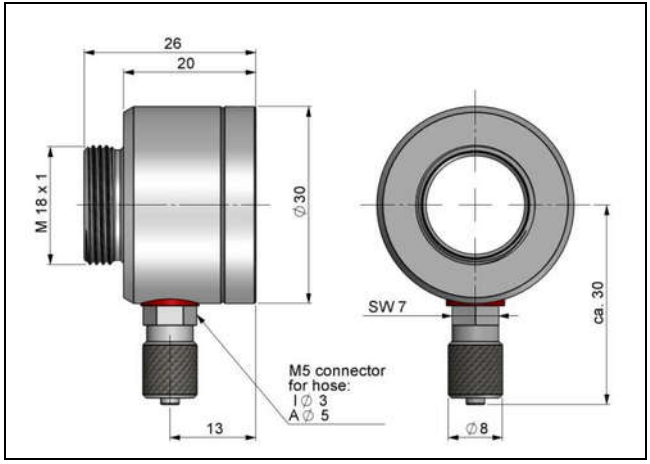

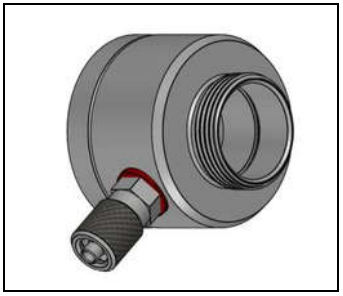

Air purge collar for LT15HS head [ACCTAPMH]

4.5 Further Accessories

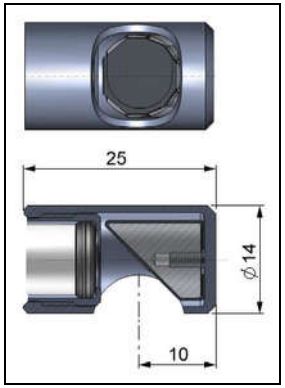

Right angle mirror enables measurement with 90° angle [ACCTRAM]
For optics with a D:S ≥ 10:1

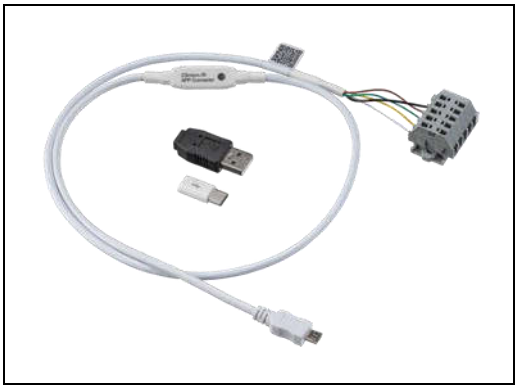

IR app connector: USB programming adaptor incl. terminal block [ACCSMIAC]

The mirror has a reflexion of 96% * in combination with LT model heads.
If the mirror is used this value has to be multiplied by the emissivity value of the measurement object.

Example: LT15 and object with emissivity = 0,85
0,85 x 0,96 = 0,816
Thus the emissivity in the CSmicro has to be set to the resulting value of 0,816.

*Deviations possible

Tilt Assembly

With this mounting accessory a fine adjustment of the CSmicro with an off-axis angle +/- 6,5° is possible.





Tilt assembly [ACCTTAS]

Isolated mounting bracket

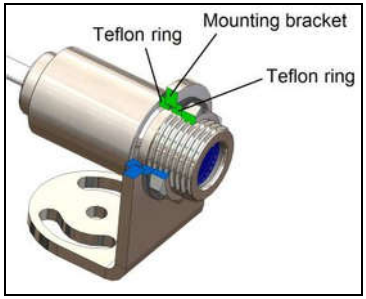

Isolated mounting bracket [ACCSMLTHFB]



Laser-Sighting tool [D08ACCTLST]

battery powered (2x Alcaline AA), for alignment of CSmicro sensing heads. The laser head has the same mechanical dimensions as the CSmicro sensing head.



<u>WARNING:</u> Do not point the laser directly at the eyes of persons or animals! Do not stare into the laser beam. Avoid indirect exposure via reflective surfaces!

► All accessories can be ordered using the according part numbers in brackets [ ].

5 Electrical Installation

5.1 Analog Mode

CSmicro as analog device (mV output on OUT pin)

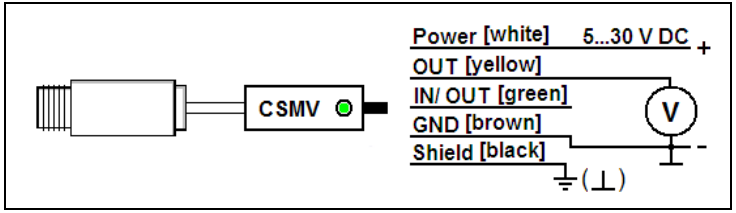

The output impedance must be ≥ 10 kΩ.

IMPORTANT:
The shield [black] on the CSmicro (exception: CSM LTxxH) is not connected to GND [brown].
It is necessary to connect the shield to ground or GND (whichever works best)!

Use a separate, stabilized power supply with an output voltage in the range **5-30 V DC**. The residual ripple of the power supply should be max. **200 mV**.
For all power and data lines use shielded cables only.

CSmicro as analog device (mA two-wire-output)

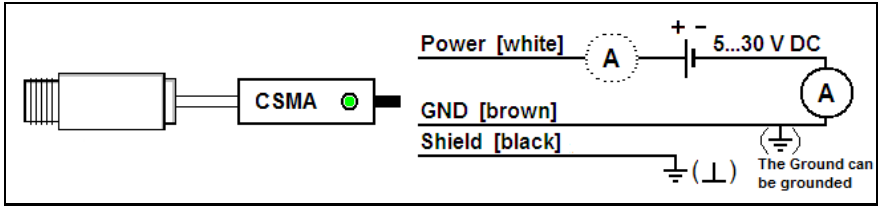

The maximum loop impedance is 1000 Ω.

CSmicro LTxxH as analog device (mA two-wire-output) – current measurement in GND- (Loop-) line

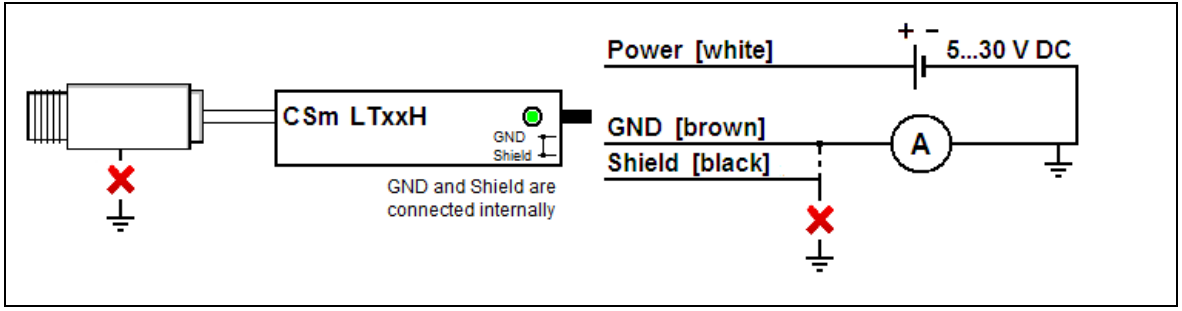

On the models LT15H and LT22H (sensing heads for ambient temperatures up to 180 °C) and on the special versions for 250 °C ambient temperature the GND and Shield is connected inside the electronics.

Special note for current measurement in GND- (Loop-) line:
In this case the sensing head must be installed isolated from ground. **An isolated mounting bracket is included (for LTH)**. A connection of the GND or Shield wire to earth is also not allowed.

For a current measurement in the Power- (Loop+) line the following drawing.
The Shield should be connected to ground or GND.

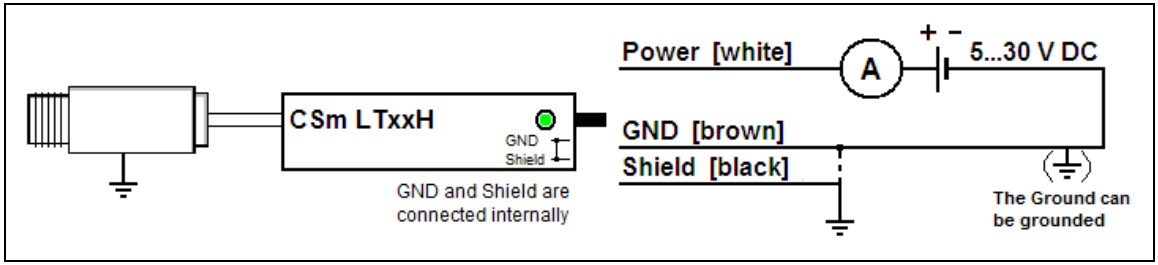

The maximum loop impedance is 1000 Ω.

5.2 Maximum Loop Impedance [CSMA models]

The maximum impedance of the current loop depends on the supply voltage level:

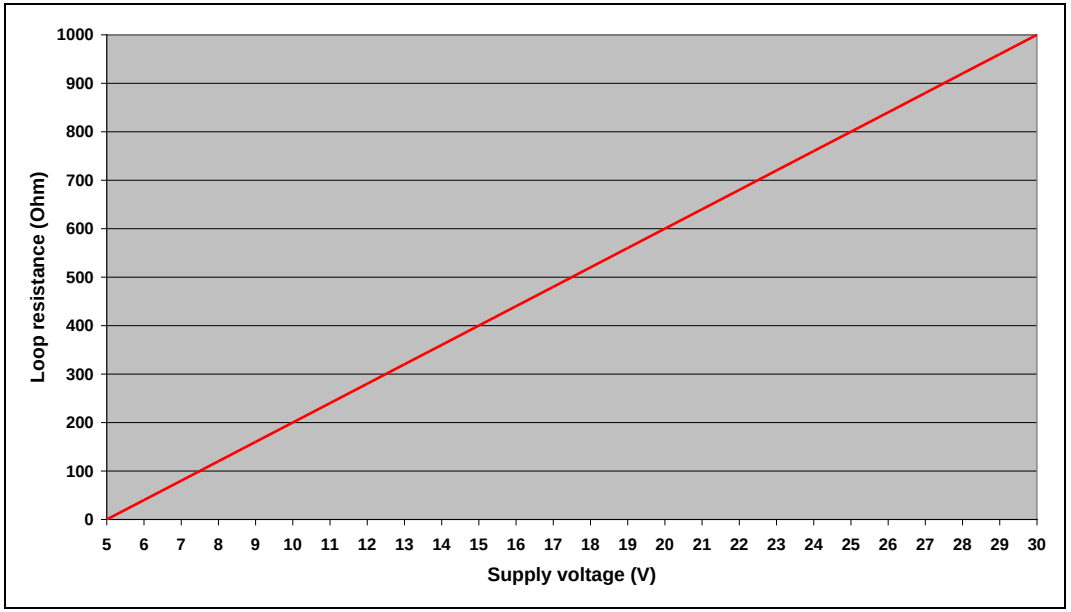

5.3 Digital Mode

For a digital communication the optional IR app connector is required. Please connect each wire of the USB adapter cable with the same colored wire of the sensor cable by using the terminal block. Press with a screw driver as shown in the picture to loose a contact.

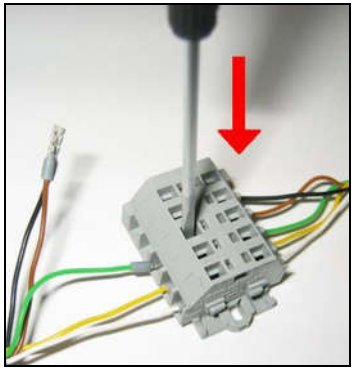

The sensor is offering two ways of digital communication:

- bidirectional communication (sending and receiving data)
- unidirectional communication (burst mode – the sensor is sending data only)

Digital mode [CSMV]

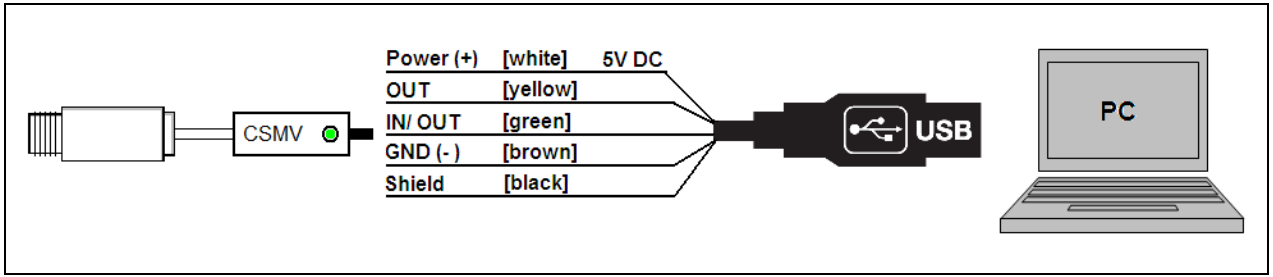

Analog + Digital mode combined [CSMA]

The two-wire models are able to work in the digital mode and simultaneously as analog device (4-20 mA). In this case the sensor will be powered by the USB interface (5 V).

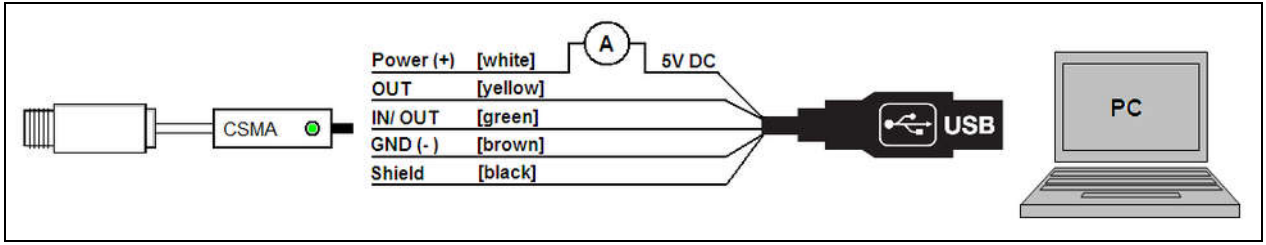

Direct connection to an RS232 interface on the computer

For a bidirectional RS232 connection of the sensor the following interface circuit can be used: MAX3381E (manufacturer: Maxim) ►**Appendix D – Direct Connection to an RS232 Interface**:

Model	CSMV	CSMA
UART voltage (RxD)	3,3 V	3,3 V
UART voltage (TxD)	3,3 V	2,5 V

5.4 Alarm Output

Open collector output [CSMV]

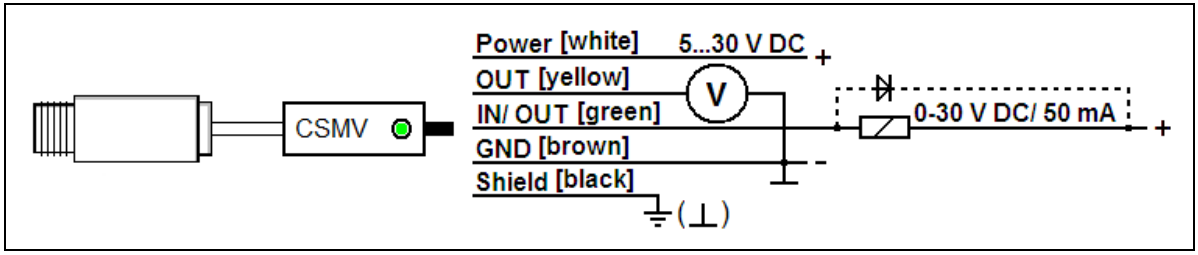

The open collector output (NPN type) is an additional alarm output on the CSmicro and can control an external relay e.g. In addition the analog output can be used simultaneously.

Open collector output [CSMA]

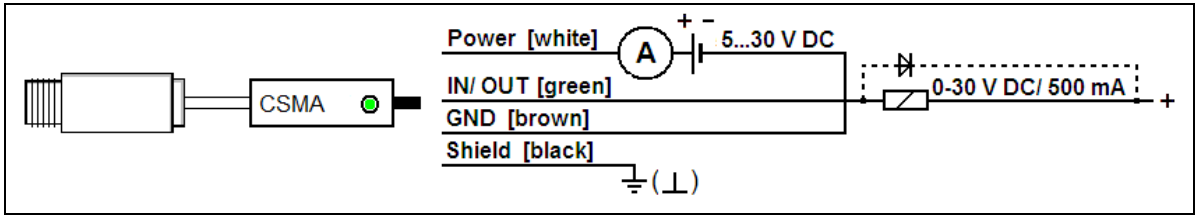

6 IRmobile app

The CSmicro has a direct connection to an Android smartphone or tablet. All you have to do is download the IRmobile app for free in the Google Play Store. This can also be done via the QR code. An IR app connector is required for connection to the device (**Part-No.: ACCSMIAC**).

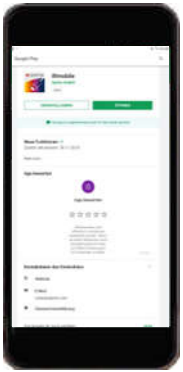

With IRmobile you are able to monitor and analyze your infrared temperature measurement on a connected smartphone or tablet. This app works on most Android devices running 4.4 or higher with a micro USB port supporting USB-OTG (On The Go). It is easy to operate: after you plug your CSmicro device to the micro USB port of your phone or tablet, the app will start automatically. The device is powered by your phone. Different digital temperature values can be displayed in the temperature time diagram. You can easily zoom-in the diagram to see more details and small signal changes.

IRmobile app features:

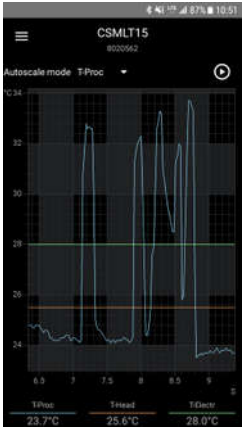

- Temperature time diagram with zoom function
- Digital temperature values
- Setup of emissivity, transmissivity and other parameters
- Scaling of 4-20 mA/ 0-10 V output and setup of alarm output
- Change of temperature unit: Celsius or Fahrenheit
- Saving/loading of configurations and T/t diagrams
- Restore factory default sensor settings
- Integrated simulator

Supported for:

- Optris pyrometers: Compact series, high performance series and video thermometers
- Optris IR cameras: PI and Xi series
- For android devices running 5.0 or higher with a micro USB or USB-C port supporting USB-OTG (On The Go)

7 Software CompactConnect

7.1 Installation

The software can be downloaded under https://www.optris.global/downloads-software. Unzip and open the program and start the **CDsetup.exe**. Follow the instructions of the wizard until the installation is finished.

Minimum system requirements:

- Windows 7, 8, 10
- USB interface
- Hard disc with at least 30 MByte free space
- At least 128 MByte RAM

The installation wizard will place a launch icon on the desktop and in the start menu:
[Start]\Programs\CompactConnect
If you want to uninstall the software from your system, please use the **uninstall icon** in the start menu.

- A detailed description is provided in the software manual on the downloaded software package.
- The software only supports USB cables ordered directly from Optris.

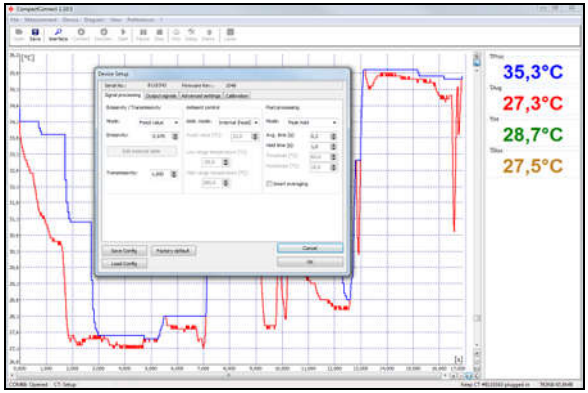

CompactConnect

Main Features:

- Graphic display for temperature trends and automatic data logging for analysis and documentation
- Complete sensor setup and remote controlling
- Adjustment of signal processing functions
- Programming of outputs and functional inputs

7.2 Communication Settings

A command list is included in the software package and can be found under documentation.

Serial Interface

Baud rate:	9600 baud
Data bits:	8
Parity:	none
Stop bits:	1
Flow control:	off

Protocol

All sensors of the CSmicro series are using a binary protocol. To get a fast communication the protocol has no additional overhead with CR, LR or ACK bytes.
To power the sensor the control signal „DTR“ has to be set.

8 Basics of Infrared Thermometry

Depending on the temperature each object emits a certain amount of infrared radiation. A change in the temperature of the object is accompanied by a change in the intensity of the radiation. For the measurement of “thermal radiation” infrared thermometry uses a wave-length ranging between 1 µm and 20 µm.
The intensity of the emitted radiation depends on the material. This material contingent constant is described with the help of the emissivity which is a known value for most materials (►**9 Emissivity**).

Infrared thermometers are optoelectronic sensors. They calculate the surface temperature on the basis of the emitted infrared radiation from an object. The most important feature of infrared thermometers is that they enable the user to measure objects contactless. Consequently, these products help to measure the temperature of inaccessible or moving objects without difficulties. Infrared thermometers basically consist of the following components:

- lens
- spectral filter
- detector
- electronics (amplifier/ linearization/ signal processing)

The specifications of the lens decisively determine the optical path of the infrared thermometer, which is characterized by the ratio Distance to Spot size.
The spectral filter selects the wavelength range, which is relevant for the temperature measurement. The detector in cooperation with the processing electronics transforms the emitted infrared radiation into electrical signals.

9 Emissivity

9.1 Definition

The intensity of infrared radiation, which is emitted by each body, depends on the temperature as well as on the radiation features of the surface material of the measuring object. The emissivity (ε – Epsilon) is used as a material constant factor to describe the ability of the body to emit infrared energy. It can range between 0 and 100 %. A “blackbody” is the ideal radiation source with an emissivity of 1,0 whereas a mirror shows an emissivity of 0,1.
If the emissivity chosen is too high, the infrared thermometer may display a temperature value which is much lower than the real temperature – assuming the measuring object is warmer than its surroundings. A low emissivity (reflective surfaces) carries the risk of inaccurate measuring results by interfering infrared radiation emitted by background objects (flames, heating systems, chamottes). To minimize measuring errors in such cases, the handling should be performed very carefully and the unit should be protected against reflecting radiation sources.

9.2 Determination of unknown Emissivity

► First, determine the actual temperature of the measuring object with a thermocouple or contact sensor. Second, measure the temperature with the infrared thermometer and modify the emissivity until the displayed result corresponds to the actual temperature.

► If you monitor temperatures of up to 380 °C you may place a special plastic sticker (emissivity dots – part number: ACLSED) onto the measuring object, which covers it completely. Now set the emissivity to 0,95

and take the temperature of the sticker. Afterwards, determine the temperature of the adjacent area on the measuring object and adjust the emissivity according to the value of the temperature of the sticker.

► Cove a part of the surface of the measuring object with a black, flat paint with an emissivity of 0,98. Adjust the emissivity of your infrared thermometer to 0,98 and take the temperature of the colored surface. Afterwards, determine the temperature of a directly adjacent area and modify the emissivity until the measured value corresponds to the temperature of the colored surface.

CAUTION: On all three methods the object temperature must be different from ambient temperature.

9.3 Characteristic Emissivity

In case none of the methods mentioned above help to determine the emissivity you may use the emissivity tables ►**Appendix A – Emissivity Table Metals** and **Appendix B – Emissivity Table Non Metals**. These are average values only. The actual emissivity of a material depends on the following factors:

- temperature
- measuring angle
- geometry of the surface
- thickness of the material
- constitution of the surface (polished, oxidized, rough, sandblast)
- spectral range of the measurement
- transmissivity (e.g. with thin films)

Appendix A – Emissivity Table Metals

Material		typical Emissivity			
Spectral response		1,0 µm	1,6 µm	5,1 µm	8-14 µm
Aluminium	non oxidized	0,1-0,2	0,02-0,2	0,02-0,2	0,02-0,1
	polished	0,1-0,2	0,02-0,1	0,02-0,1	0,02-0,1
	roughened	0,2-0,8	0,2-0,6	0,1-0,4	0,1-0,3
	oxidized	0,4	0,4	0,2-0,4	0,2-0,4
Brass	polished	0,35	0,01-0,05	0,01-0,05	0,01-0,05
	roughened	0,65	0,4	0,3	0,3
	oxidized	0,6	0,6	0,5	0,5
Copper	polished	0,05	0,03	0,03	0,03
	roughened	0,05-0,2	0,05-0,2	0,05-0,15	0,05-0,1
	oxidized	0,2-0,8	0,2-0,9	0,5-0,8	0,4-0,8
Chrome		0,4	0,4	0,03-0,3	0,02-0,2
Gold		0,3	0,01-0,1	0,01-0,1	0,01-0,1
Haynes	alloy	0,5-0,9	0,6-0,9	0,3-0,8	0,3-0,8
Inconel	electro polished	0,2-0,5	0,25	0,15	0,15
	sandblast	0,3-0,4	0,3-0,6	0,3-0,6	0,3-0,6
	oxidized	0,4-0,9	0,6-0,9	0,6-0,9	0,7-0,95
Iron	non oxidized	0,35	0,1-0,3	0,05-0,25	0,05-0,2
	rusted		0,6-0,9	0,5-0,8	0,5-0,7
	oxidized	0,7-0,9	0,5-0,9	0,6-0,9	0,5-0,9
	forged, blunt	0,9	0,9	0,9	0,9
	molten	0,35	0,4-0,6		
Iron, casted	non oxidized	0,35	0,3	0,25	0,2
	oxidized	0,9	0,7-0,9	0,65-0,95	0,6-0,95

Material		typical Emissivity			
Spectral response		**1,0 µm**	**1,6 µm**	**5,1 µm**	**8-14 µm**
Lead	polished	0,35	0,05-0,2	0,05-0,2	0,05-0,1
	roughened	0,65	0,6	0,4	0,4
	oxidized		0,3-0,7	0,2-0,7	0,2-0,6
Magnesium		0,3-0,8	0,05-0,3	0,03-0,15	0,02-0,1
Mercury			0,05-0,15	0,05-0,15	0,05-0,15
Molybdenum	non oxidized	0,25-0,35	0,1-0,3	0,1-0,15	0,1
	oxidized	0,5-0,9	0,4-0,9	0,3-0,7	0,2-0,6
Monel (Ni-Cu)		0,3	0,2-0,6	0,1-0,5	0,1-0,14
Nickel	electrolytic	0,2-0,4	0,1-0,3	0,1-0,15	0,05-0,15
	oxidized	0,8-0,9	0,4-0,7	0,3-0,6	0,2-0,5
Platinum	black		0,95	0,9	0,9
Silver		0,04	0,02	0,02	0,02
Steel	polished plate	0,35	0,25	0,1	0,1
	rustless	0,35	0,2-0,9	0,15-0,8	0,1-0,8
	heavy plate			0,5-0,7	0,4-0,6
	cold-rolled	0,8-0,9	0,8-0,9	0,8-0,9	0,7-0,9
	oxidized	0,8-0,9	0,8-0,9	0,7-0,9	0,7-0,9
Tin	non oxidized	0,25	0,1-0,3	0,05	0,05
Titanium	polished	0,5-0,75	0,3-0,5	0,1-0,3	0,05-0,2
	oxidized		0,6-0,8	0,5-0,7	0,5-0,6
Wolfram	polished	0,35-0,4	0,1-0,3	0,05-0,25	0,03-0,1
Zinc	polished	0,5	0,05	0,03	0,02
	oxidized	0,6	0,15	0,1	0,1

Appendix B – Emissivity Table Non Metals

Material		typical Emissivity			
Spectral response		**1,0 µm**	**2,2 µm**	**5,1 µm**	**8-14 µm**
Asbestos		0,9	0,8	0,9	0,95
Asphalt				0,95	0,95
Basalt				0,7	0,7
Carbon	non oxidized		0,8-0,9	0,8-0,9	0,8-0,9
	graphite		0,8-0,9	0,7-0,9	0,7-0,8
Carborundum			0,95	0,9	0,9
Ceramic		0,4	0,8-0,95	0,8-0,95	0,95
Concrete		0,65	0,9	0,9	0,95
Glass	plate		0,2	0,98	0,85
	melt		0,4-0,9	0,9	
Grit				0,95	0,95
Gypsum				0,4-0,97	0,8-0,95
Ice					0,98
Limestone				0,4-0,98	0,98
Paint	non alkaline				0,9-0,95
Paper	any color			0,95	0,95
Plastic >50 µm	non transparent			0,95	0,95
Rubber				0,9	0,95
Sand				0,9	0,9
Snow					0,9
Soil					0,9-0,98
Textiles				0,95	0,95
Water					0,93
Wood	natural			0,9-0,95	0,9-0,95

Appendix C – Smart Averaging

The average function is generally used to smoothen the output signal. With the adjustable parameter time this function can be optimal adjusted to the respective application. One disadvantage of the average function is that fast temperature peaks which are caused by dynamic events are subjected to the same averaging time. Therefore those peaks can only be seen with a delay on the signal output.
The function **Smart Averaging** eliminates this disadvantage by passing those fast events without averaging directly through to the signal output.

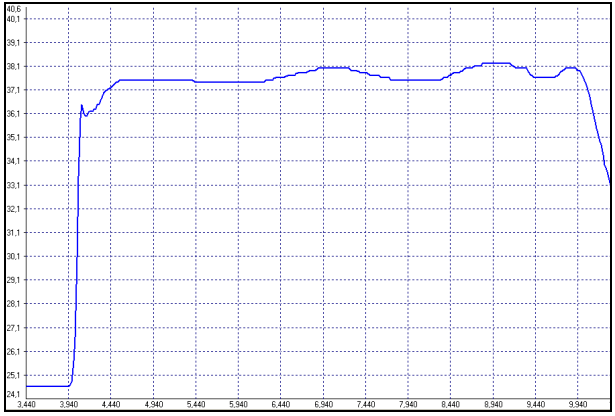

Signal graph with Smart Averaging function

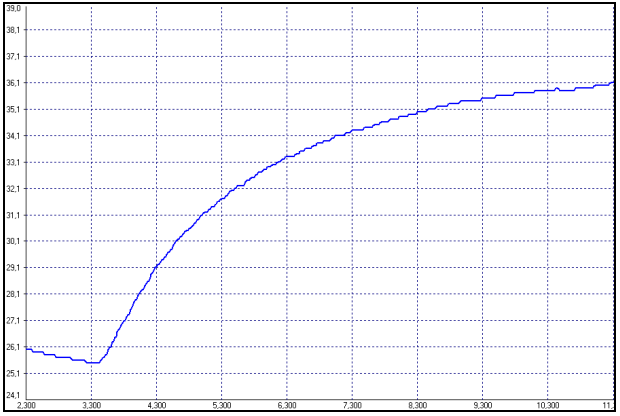

Signal graph without Smart Averaging function

Appendix D – Direct Connection to an RS232 Interface

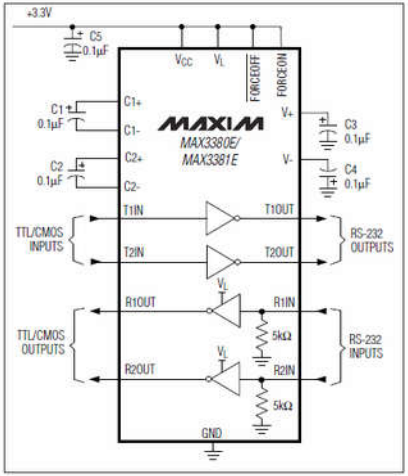

CSM connections: TxD (yellow) to T1IN
RxD (green) to R1OUT
GND (brown) to GND

PC connections: connect T1OUT with RxD (PC)
connect R1IN with TxD (PC)

Appendix E – Declarations of Conformity

EG-Konformitätserklärung
EU Declaration of Conformity

optris infrared measurements

Wir / We

Optris GmbH
Ferdinand Buisson Str. 14
D-13127 Berlin

erklären in alleiniger Verantwortung, dass
declare on our own responsibility that

die Produktserie optris CSmicro
the product group optris CSmicro

den Anforderungen der EMV-Richtlinie **2014/30/EU** und der allgemeinen Produktsicherheits-richtlinie **2001/95/EG** entspricht.
meets the provisions of the EMC Directive **2014/30/EU** and the General Product Safety Directive **2001/95/EC**.

Angewandte harmonisierte Normen:
Applied harmonized standards:

EMV Anforderungen / EMC General Requirements:

EN 61326-1:2013 (Grundlegende Prüfanforderungen / Basic requirements)
EN 61326-2-3:2013

Gerätesicherheit von Messgeräten / Safety of measurement devices:

EN 61010-1:2010
EN 60825-1:2014 (Lasersicherheit / Laser safety)

Dieses Produkt erfüllt die Vorschriften der Richtlinie **2015/863/EU** (RoHS) des Europäischen Parlaments und des Rates vom 4. Juni 2015 zur Beschränkung der Verwendung bestimmter gefährlicher Stoffe in Elektro- und Elektronikgeräten.
This product is in conformity with Directive **2015/863/EU** (RoHS) of the European Parliament and of the Council of 4 June 2015 on the restriction of the use of certain hazardous substances in electrical and electronic equipment.

Berlin, 14.12.2020

Ort, Datum / place, date

Dr. Ulrich Kienitz
Geschäftsführer / General Manager

optris CSmicro-MA-E2020-12-A