E70495

Coding pins

Coding pins / 6 pcs.

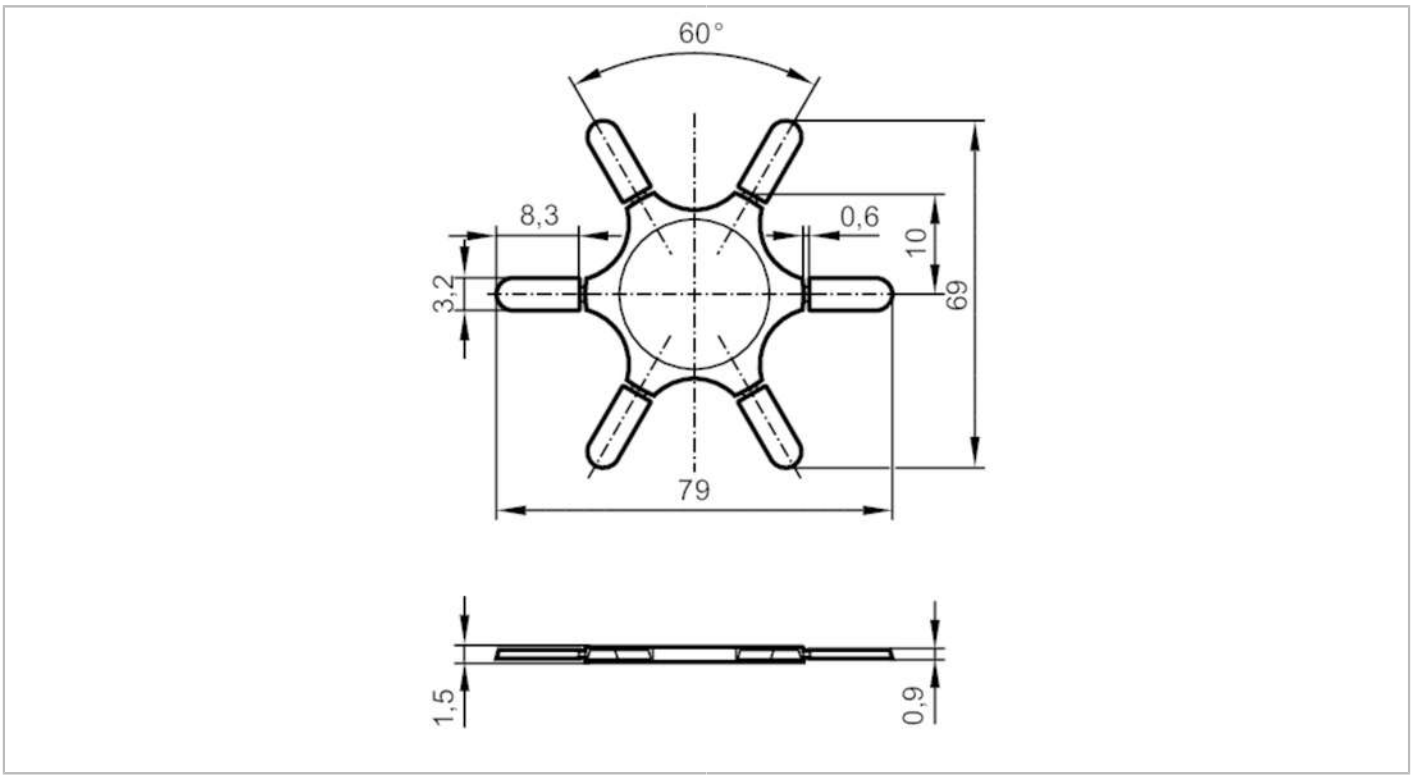

Operating conditions		
Ambient temperature	[°C]	-40...115
Mechanical data		
Weight	[g]	2.55
Materials		PA
Remarks		
Pack quantity		6 pcs.