SUNON

SPECIFICATION FOR APPROVAL

CUSTOMER	:	
DESCRIPTION	:	**AXIAL AC FAN**
DIMENSIONS	:	**80X80X38 mm**
M O D E L	:	**SF23080A**
P/N	:	**2083HBL.GN**
SUNON SPEC. NO.	:	**A08000560G-00**
CUSTOMER APPROVAL NO.	:	
APPROVED BY CUSTOMER	:	

(AUTHORIZED)

DRAWN	Jeff 06/03	**CHECKED**	Kiddy March	**APPROVED**	Jacky	**SPEC.NO**	**A08000560G-00**
						ISSUE DATE	**05. 10. 2005**
						EDITION	**2**
						REVISION DATE	**06. 03. 2013**
						E.SPEC	**EA80035**

建準電機工業股份有限公司
SUNONWEALTH ELECTRIC MACHINE INDUSTRY CO., LTD.
NO. 30, LN. 296, XINYA RD., QIANZHEN DIST., KAOHSIUNG CITY 80673, TAIWAN (R.O.C)
TEL:886-7-8135888
FAX:886-7-8230505/8230606/8231010
URL:http://www.sunon.com
E-mail: sunon@email.sunon.com.tw

D.C.C.
2013.07.15
發 行 章

AXIAL AC FAN

MODEL : SF23080A

P/N : 2083HBL.GN

CHARACTERISTICS

1. Motor Design	:	Reliable Shaded-Pole Motor Construction.
2. Insulation Resistance	:	500Megohms minimum at 500 VDC.
3. Dielectric Strength	:	1500 VAC for one second .
4. Motor Protection	:	Impedance protected.
5. Noise Level	:	Measured in a semi-anechoic chamber with background noise level below 15 dB(A). The fan is running in free air with the microphone at a distance of one meter from the fan intake.
6. Tolerance	:	±15% on rated power and current.
7. Air Performance	:	Measured by a double chamber. The values
	:	are recorded when the fan speed has stabilized
	:	at rated voltage.

建準電機工業(股)公司 D.C.C. 2013.07.15 發行章

SPECIFICATIONS

MODEL: SF23080A

P/N : 2083HBL.GN

1-1.	Rated Voltage	: 220-240 VAC 50/60 Hz
1-2.	Operating Voltage Range	: 185-245 VAC
1-3.	Starting Voltage	: 185 VAC(25 deg. C POWER ON/OFF)
1-4.	Rated Speed	: 2400/2850 RPM ± 10%
1-5.	Air Delivery	: 24/31 CFM
1-6.	Static Pressure	: 0.13/0.19 Inch-H_2O
1-7.	Rated Current	: 0.09/0.08 AMP
1-8.	Rated Power	: 14/13.5 WATTS
1-9.	Noise Level	: 32/36.5 dB(A)
1-10.	Direction of Rotation	: Counter-clockwise viewed from front of fan blade
1-11.	Operating Temperature	: -10 to +70 deg. C
1-12.	Storage Temperature	: -40 to +70 deg. C
1-13.	Bearing System	: Precision ball bearing system
1-14.	Weight	: 340g
1-15.	Safety	: UL/CUR/TUV/CE Approvals
1-16.	Protection	: ☐Automatic Restart Capability

Note: In a situation where the fan is locked by an external force while the electricity is on, an increase in coil temperature will be prevented by temporarily turning off the electrical power to the motor. The fan will automatically restart when the locked rotor condition is released

☐Polarity Protection

D.C.C.
2013.07.15
發 行 章

MODEL : SF23080A

P/N : 2083HBL.GN

PERFORMANCE CURVES

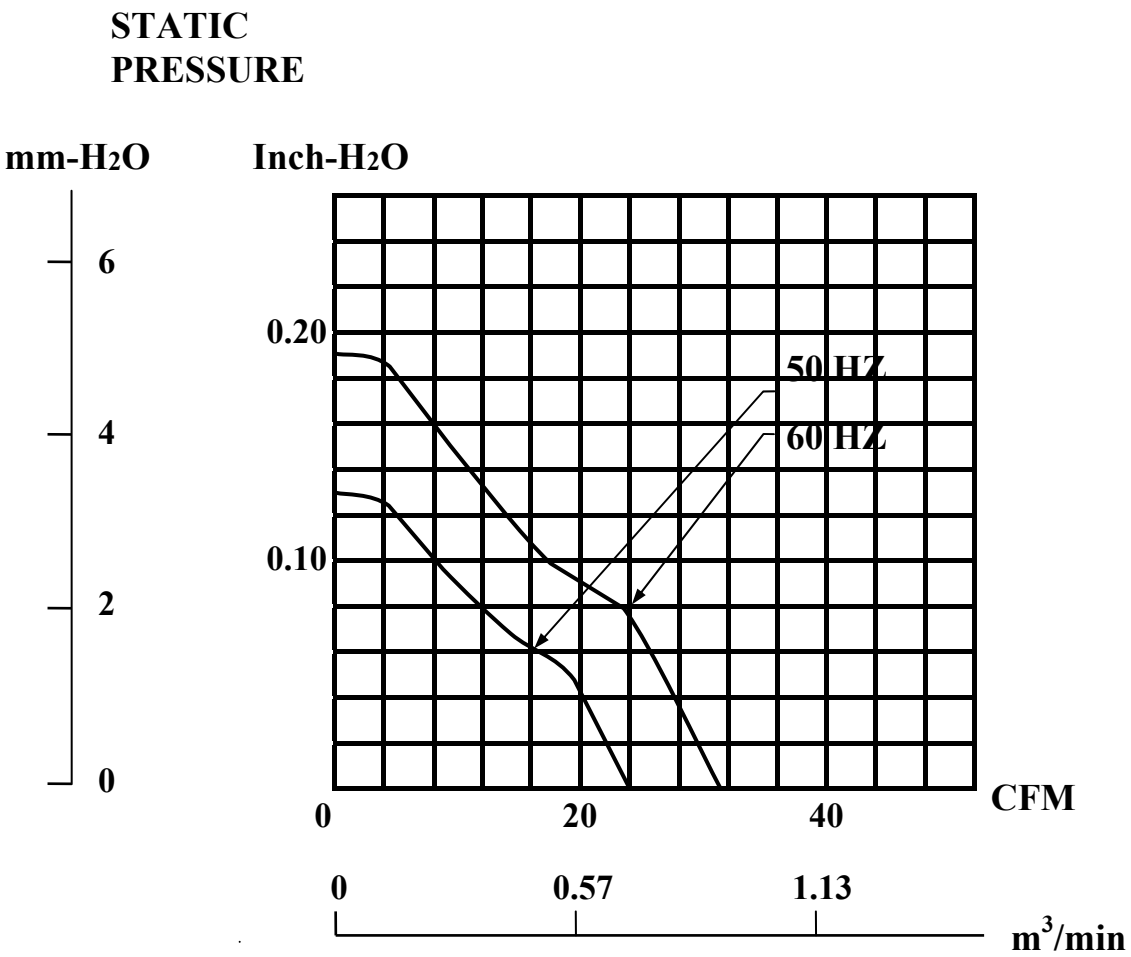

建準電機工業(股)公司 D.C.C. 2013.07.15 發 行 章

MATERIAL

2. Material

2-1. Frame	**:**	**DIE-CAST ALUMINUM**
2-2. Impeller	**:**	**Thermoplastic PBT of UL 94V-0**
2-3. Lead Wire	**:**	**UL3266, 24 awg, GRAY**

DIMENSIONS

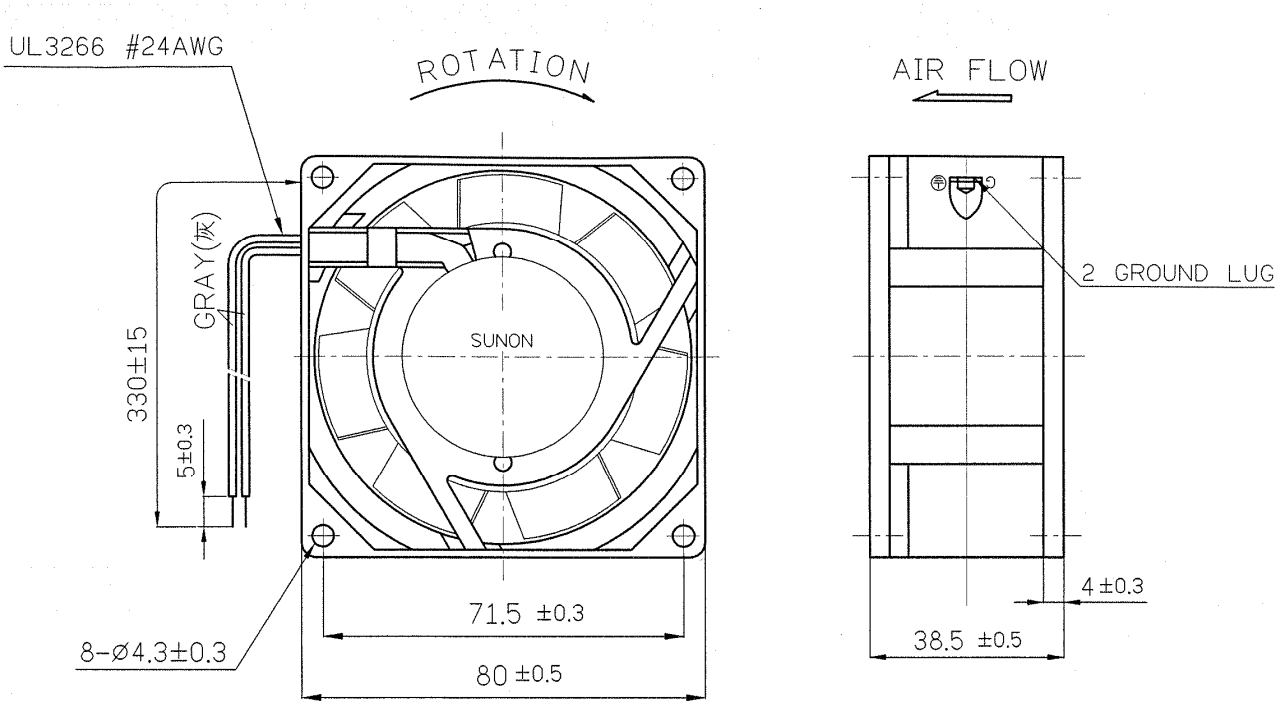

Air Flow Direction: Toward label side.

UNITS：mm

D.C.C.
2013.07.15
發 行 章

Notes

Ⅰ.SAFETY

1. DO NOT use or operate this fan in excess of the limitations set forth in this specification. SUNON is not responsible for the non-performance of this fan and/or any damages resulting from its use, if it is not used or operated in accordance with the specifications.

2. SUNON recommends adding a protection circuit to the product or application in which this fan is installed, such as a thermo-fuse, or current-fuse or thermo-protector. The failure to use such a device may result in smoke, fire, electric shock by insulation degradation in cases of motor lock, motor lead short circuit, overload, or over voltage, and/or other failure.

3. SUNON recommends installing a protection device to the product or application in which this fan is installed if there is a possibility of reverse-connection between VDC (+) and GND (-). The failure to install such a device may result in smoke, fire, and/or destruction, although these conditions may not manifest immediately.

4. This fan must be installed and used in compliance with all applicable safety standards and regulations.

5. Use proper care when handling and/or installing this fan. Improper handling or installation of this fan may cause damage that could result in unsafe conditions.

6. Use proper care during installation and/or wiring. Failure to use proper care may cause damage to certain components of the fan including, but not limited to, the coil and lead wires, which could result in smoke and/or fire.

7. DO NOT use power or ground PWM to control the fan speed. If the fan speed needs to be adjusted, please contact SUNON to customize the product design for your application.

8. For critical or extreme environments, including non stop operation, please contact SUNON and we will gladly provide assistance with your product selection to ensure an appropriate cooling product for your application.

建準電機工業(股)公司 D.C.C. 2013.07.15 發行章

Notes

II. SPECIFICATION MODIFICATION

1. SUNON offers engineering assistance on fan installation and cooling system design.

2. All changes, modifications and/or revisions to the specifications, if any, are incorporated in the attached specifications.

3. No changes, modifications and/or revisions to these specifications are effective absent agreement, by both SUNON and the customer, in writing.

4. This fan will be shipped in accordance with the attached specification unless SUNON and the customer have agreed otherwise, in writing, as specified in Paragraph 3, above.

III. OTHER

1. When building your device, please examine thoroughly any variation of EMC, temperature rise, life data, quality, etc. of this product by shock/drop/vibration testing, etc. If there are any problems or accidents in connection with this product, it should be mutually discussed and examined.

2. Use proper care when handling this fan. Components such as fan holders or bearings may be damaged, if touched with fingers or other objects. Additionally, static electricity (ESD) may damage the internal circuits of the fan.

3. DO NOT operate this fan in proximity to hazardous materials such as organic silicon, cyanogens, formalin, phenol, or corrosive gas environments including, but not limited to, H_2S, SO_2, NO_2, or Cl_2.

4. SUNON recommends that you protect this fan from exposure to outside elements such as dust, condensation, humidity or insects. Exposure of this fan to outside elements such as dust, condensation, humidity or insects may affect its performance and may cause safety hazards. SUNON does not warrant against damage to the product caused by outside elements.

建準電機工業(股)公司 D.C.C. 2013.07.15 發行章

Notes

5. This fan must be installed properly and securely. Improper mounting may cause harsh resonance, vibration, and noise.

6. Fan guards may prevent injury during handling or installation of the fan and are available for sale with this fan.

7. Unless otherwise noted, all testing of this fan is conducted at 25°C ambient temperature and sixty-five percent (65%) relative humidity.

8. DO NOT store this fan in an environment with high humidity. This fan must be stored in accordance with the attached specifications regarding storage temperature. If this fan is stored for more than 6 months, SUNON recommends functional testing before using.

9. SUNON reserves the right to use components from multiple sources at its discretion. The use of components from other sources will not affect the specifications as described herein.

10. The "Life Expectancy" of this fan has not been evaluated for use in combination with any end application. Therefore, the Life Expectancy Test Reports (L10 and MTTF Report) that relate to this fan are only for reference.

VI. WARRANTY

This fan is warranted against all defects which are proved to be fault in our workmanship and material for one year from the date of our delivery. The sole responsibility under the warranty shall be limited to the repair of the fan or the replacement thereof, at SUNON's sole discretion. SUNON will not be responsible for the failures of its fans due to improper handing, misuse or the failure to follow specifications or instructions for use. In the event of warranty claim, the customer shall immediately notify SUNON for verification. SUNON will not be responsible for any consequential damage to the customer's equipment as a result of any fans proven to be defective.

建準電機工業(股)公司 D.C.C. 2013.07.15 發行章

Declaration of RoHS

Control declaration of environment- related substances/ materials

1. In accordance with the Restriction of Hazardous Substances (RoHS) Directive 2011/65/EU, SUNON product have complied with law and discipline not to employ the forbidden substances, and restrict the allowable concentration of some limited substances deliberately in our components.

No	Substance		Criteria
1	CFCs & HCFCs (ozone depleting substances)		Forbidden
2	Chlorinated Organic Solvent		Forbidden
3	Lead and its compounds	Plastic (Frame, Impeller, wire harness, etc.)	<100ppm
		Solder	<1000ppm
		Steel alloy	<3500ppm
		Aluminium alloy	<4000ppm
		Copper alloy	<4wt%
4	Cadmium and its compounds	Solder	<20ppm
		Parts composed of metals containing zinc (e.g. brass, zinc for die casting)	<100ppm
		Plastic	<5ppm
5	PBBs and PBDEs		Forbidden
6	PCB and PCT		Forbidden
7	CP, Short-chain Chlorinated paraffins C10-13, Cl ≥48 wt%		Forbidden
8	Mirex		Forbidden
9	PCN		Forbidden
10	Hexavalent Chromium compounds		<100ppm
11	Mercury and its compounds		Forbidden
12	Asbestos		Forbidden
13	Organic Tin compounds		Forbidden
14	Azo compounds		Forbidden
15	TBBP-A in external case plastic parts of products (PCB is exempted)		<1000ppm
16	Nickel in external case parts, which are likely to result in prolonged skin exposure		<1000ppm
17	Hexabromocyclododecane (HBCDD)		<1000ppm
18	Di-butyl Phthalate (DBP)		<1000ppm
19	Benzyl butyl Phthalate (BBP)		<1000ppm
20	Di-ethylhexyl Phthalate (DEHP)		<1000ppm
21	Di-isobutyl Phthalate (DIBP)		<1000ppm

建準電機工業(股)公司 D.C.C. 2013.07.15 發行章